FC4SD

(Former HC49SDLF)

11.7mm x 5.0mm
Resistance Weld SMD Crystal

Features

- Tolerances down to ±10 ppm
- Stabilities down to ±5 ppm
- Operating Temperature Range to -55°C ~ +125°C

STANDARD SPECIFICATIONS	
PARAMETERS	**MAX (Unless otherwise noted)**
Frequency Range	3.200 ~ 80.000 MHz
Frequency Tolerance @ 25°C	(See options below)
Frequency Stability, ref 25°C Over Operating Temp Range	(See options below)
Temperature Range Operating (T_{OPR}) Storage (T_{STG})	(See options below) -55°C ~ +125°C
Shunt Capacitance (C_O)	7 pF
Load Capacitance (C_L)	(See options below)
Drive Level	0.5mW (100µW Typical)
Aging per year (@ 25°C)	±3 PPM
Maximum Soldering Temp / Time	260°C / 10 Seconds x 2
Moisture Sensitivity Level (MSL) per J-STD-033	1
Termination Finish	Sn/Ag3.0/Cu0.5
Seal Method	Resistance Weld
Lead (Pb) Free	Yes
RoHS Compliant	Yes-No Exemptions

Frequency Range (MHz)	Operating Mode	Max ESR Ω
3.200 ~ 3.500	Fundamental	300
>3.500 ~ 4.000	Fundamental	200
>4.000 ~ 5.000	Fundamental	150
>5.000 ~ 6.000	Fundamental	120
>6.000 ~ 7.000	Fundamental	100
>7.000 ~ 9.000	Fundamental	80
>9.000 ~ 13.000	Fundamental	60
>13.000 ~ 20.000	Fundamental	40
>20.000 ~ 40.000	Fundamental	30
24.000 ~ 70.000	3rd OT	100
>70.000 ~ 80.000	3rd OT	70

DIMENSIONS / MECHANICAL SPECIFICATIONS

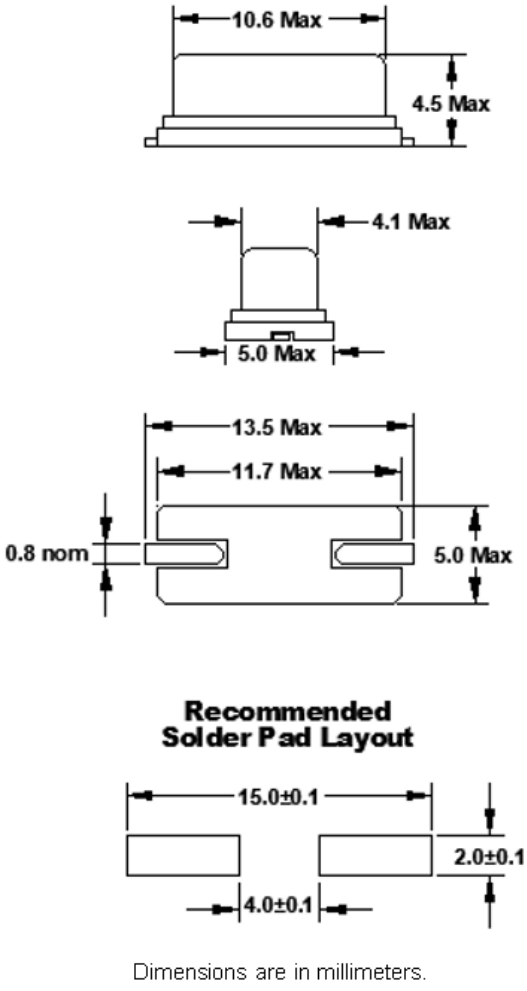

Dimensions are in millimeters.

Note: Dimensional drawing is for reference to critical specifications defined by size measurements. Certain non-critical visual attributes, such as side castellations, etc. may vary.

FC4SD

(Former HC49SDLF)

11.7mm x 5.0mm

Resistance Weld SMD Crystal

AVAILABLE OPERATING TEMPERATURES AND STABILITIES*								
Operating Temperature	**±5 PPM**	**±10 PPM**	**±15 PPM**	**±20 PPM**	**±25 PPM**	**±30 PPM**	**±50 PPM**	**±100 PPM**
-10°C to+60°C	O	O	O	O	O	O	O	O
-20°C to +70°C	Δ	O	O	O	O	O	O	O
-40°C to +85°C	X	X	O	O	O	O	O	O
-40°C to+105°C	X	X	X	X	X	Δ	O	O
-40°C to+125°C	X	X	X	X	X	X	Δ	O
-55°C to+125°C	X	X	X	X	X	X	Δ	O
Key: O = Available, X = Not Available, Δ = Consult Fox Technical Support *Does not imply a stocked part.								

TAPE SPECIFICATIONS (mm)							REEL SPECIFICATIONS (mm)						
A	**B**	**C**	**D**	**E**	**F**	**REEL QTY**	**G**	**H**	**I**	**J**	**K**	**L**	**M**
ø1.55	4.0	12.0	11.5	24.0	4.8	-T1 = 1,000	2.0	Ø13	Ø21	Ø80	Ø330	25.5	2.0

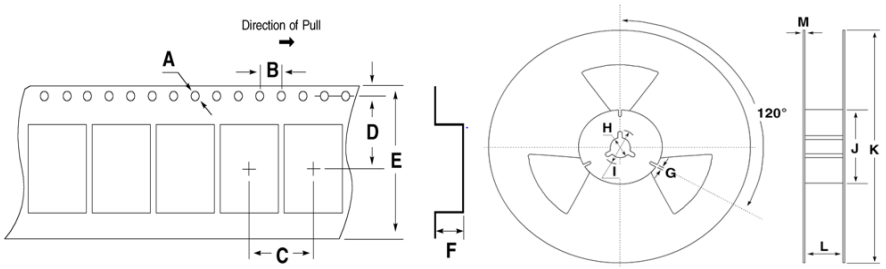

Available Options & Part Identification for Crystal Model C4SD[1]

Sample PN: FC4SDCBMF25.0-T1

F	C4SD	C	B	M	F	25.0	-T1
Fox	**Model Number**	**Tolerance**	**Stability**	**Load Capacitance[2]**	**Operating Temperature**	**Frequency (MHz)**	**Values Added Options**
		B = ±50ppm **C = ±30ppm** D = ±25ppm E = ±20ppm F = ±15ppm H = ±10ppm	A = ±100 ppm **B = ±50 ppm** C = ±30 ppm D = ±25 ppm E = ±20 ppm F = ±15 ppm H = ±10 ppm L = ±5 ppm	A = Series E = 10pF G = 12pF J = 15pF K = 16pF L = 18pF **M = 20pF**	D = -10 to +60°C **F = -20 to +70°C** M = -40 to +85°C P = -40 to +105°C I = -40 to +125°C T = -55 to +125°C		Blank = Bulk T1 = 1,000 pcs

1 Not all frequency, tolerance, stability, load, and operating temperature combinations may be available.

2 Listed load capacitances represent the most commonly used. Other load capacitances are available. Contact us for assistance

Reliability Test Conditions
Please contact Abracon Quality Assurance department