MPM3683-20

2.7V to 16V, 15A, Step-Down Power Module

DESCRIPTION

The MPM3683-20 is an easy-to-use, fully integrated, step-down DC/DC power module. The MPM3683-20 offers a complete power solution that achieves up to 20A of peak current. It integrates a DC/DC converter, power inductor, and passive components. The MPM3683-20 can deliver the output current (I_{OUT}) across a wide input voltage (V_{IN}) supply range, with excellent load and line regulation.

The MPM3683-20 uses constant-on-time (COT) control to provide fast transient response and ease loop stabilization.

The operating switching frequency (f_{SW}) can be set to 600kHz, 800kHz, or 1000kHz with the MODE pin. This allows f_{SW} to remain constant, regardless of V_{IN} or the output voltage (V_{OUT}).

The MPM3683-20 features a configurable soft-start time (t_{SS}) with one capacitor. An open-drain power good (PG) signal indicates whether V_{OUT} is within the nominal voltage range.

The MPM3683-20 has fully integrated, non-latch protection features including over-current protection (OCP), over-voltage protection (OVP), and over-temperature protection (OTP).

The MPM3683-20 is available in a compact FCM LGA-29 (7mmx7mmx4.4mm) package.

FEATURES

- Wide Input Voltage (V_{IN}) Range:
  - 2.7V to 16V with External 3.3V V_{CC}
  - 4V to 16V with Internal or External V_{CC}
- Output Voltage (V_{OUT}) Range: 0.6V to 5.5V
- 15A Continuous Output Current (I_{OUT}) with a 20A Peak (1)
- Differential V_{OUT} Remote Sense
- Adaptive Constant-On-Time (COT) for Ultra-Fast Transient Response
- Selectable Pulse-Skip Mode (PSM) or Forced Continuous Conduction Mode (FCCM)
- V_{OUT} Tracking
- PG Active-Clamped to Low Level during Power Failure
- Configurable Soft-Start Time (t_{SS})
- Pre-Biased Start-Up
- Selectable Switching Frequency (f_{SW}) from 600kHz, 800kHz, and 1000kHz
- Non-Latch Over-Current Protection (OCP), Under-Voltage Lockout (UVLO), Over-Temperature Protection (OTP), and Over-Voltage Protection (OVP)
- Available in an FCM LGA-29 (7mmx7mmx4.4mm) Package

APPLICATIONS

- Telecom and Networking Systems
- Base Stations
- Industrial Systems
- Servers and Storage
- FPGA and ASIC Cards

All MPS parts are lead-free, halogen-free, and adhere to the RoHS directive. For MPS green status, please visit the MPS website under Quality Assurance. “MPS”, the MPS logo, and “Simple, Easy Solutions” are trademarks of Monolithic Power Systems, Inc. or its subsidiaries.

Note:

1) It is recommended that the maximum continuous output current (I_{OUT}) be kept below 10A when V_{OUT} exceeds 3.3V.

MPS Proprietary Information. Patent Protected. Unauthorized Photocopy and Duplication Prohibited.
© 2023 MPS. All Rights Reserved.

TYPICAL APPLICATION

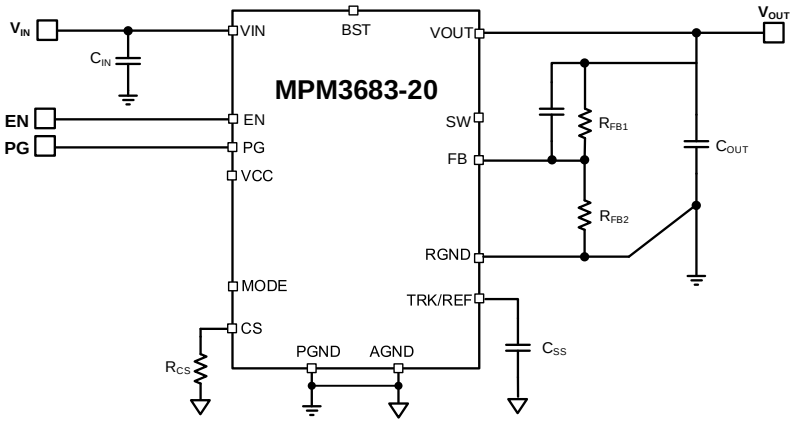

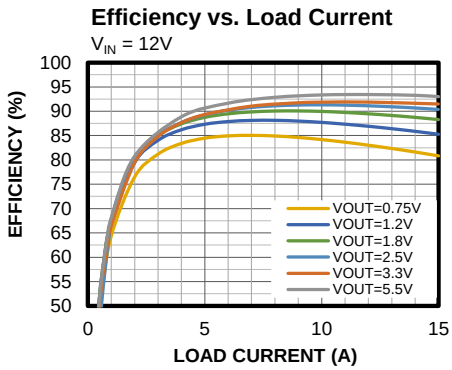

MPS Proprietary Information. Patent Protected. Unauthorized Photocopy and Duplication Prohibited.
© 2023 MPS. All Rights Reserved.

ORDERING INFORMATION

Part Number*	Package	Top Marking	MSL Rating
MPM3683GMN-20	LGA-29 (7mmx7mmx4.4mm)	*See Below*	3

* For tray, add suffix -T (e.g. MPM3683GMN-20-T).

TOP MARKING

MPS YYWW
MP3683-20
LLLLLLLLL
M

MPS: MPS prefix
YY: Year code
WW: Week code
MP3683-20: Part number
LLLLLLLLL: Lot number
M: Module

PACKAGE REFERENCE

TOP VIEW

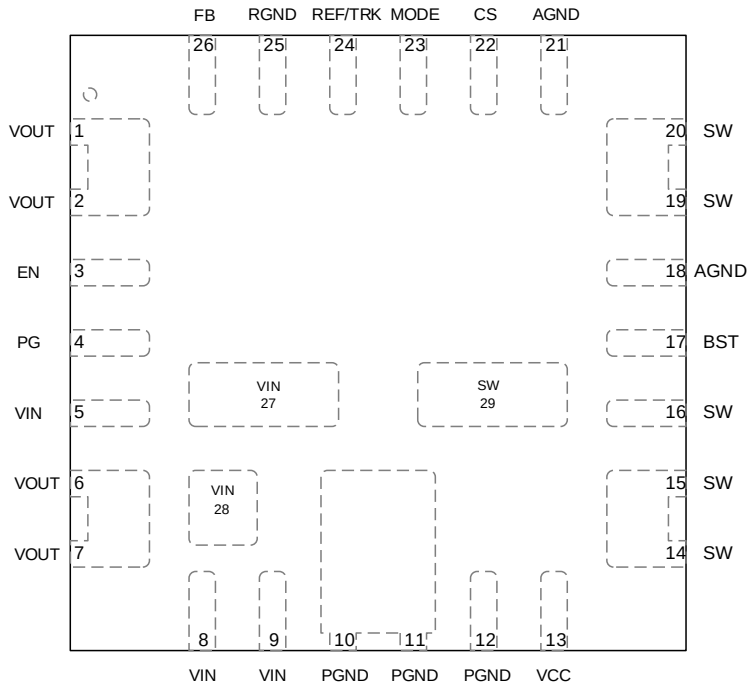

LGA-29 (7mmx7mmx4.4mm)

MPS Proprietary Information. Patent Protected. Unauthorized Photocopy and Duplication Prohibited.
© 2023 MPS. All Rights Reserved.

PIN FUNCTIONS

Pin #	Name	Description
1, 2, 6, 7	VOUT	**Module voltage output node.**
3	EN	**Enable.** The EN pin is a digital input that turns the regulator on or off. Drive EN high to turn on the regulator; drive EN low to turn off the regulator. Connect EN to VIN through a pull-up resistor or a resistor divider for automatic start-up. Do not float EN.
4	PG	**Power good output.** PG is an open-drain signal. A pull-up resistor connected to a DC voltage is required to indicate a logic high signal if the output voltage (V_{OUT}) is within regulation. There is a delay of about 0.9ms between the time V_{FB}>92.5%V_{REF} and PG pulling high.
5, 8, 9, 27, 28	VIN	**Input voltage.** The VIN pin supplies power for the internal MOSFET and regulator. Place input capacitors at VIN to decouple the input rail. Use wide PCB traces to make the VIN connection.
10, 11, 12	PGND	**System ground.** The PGND pin is the reference ground of the regulated output voltage, and requires careful consideration during the PCB layout. Use wide PCB traces to make the PGND connection.
13	VCC	**Internal 3.3V LDO output.** The driver and control circuits are powered from the VCC pin's voltage. The module integrates a 1µF capacitor, and does not require an additional external capacitor.
14, 15, 16, 19, 20, 29	SW	**Switch output.** It is recommended to place a large copper plane on SW to improve thermal performance.
17	BST	**Bootstrap.** There is an internal, integrated bootstrap capacitor between the BST pin and SW pin, and does not require an external connection.
18, 21	AGND	**Analog ground.** Select AGND as the control circuit reference point.
22	CS	**Current limit.** Connect a resistor from CS to ground to set the current limit tripping point. The module integrates a 24.9kΩ resistor from CS to AGND.
23	MODE	**Operation mode selection**. Configure the MODE pin to select forced continuous conduction mode (FCCM), pulse-skip mode (PSM), and set the operating switching frequency. See Table 1 on page 15 for more details.
24	TRK/REF	**External tracking voltage input.** The output voltage tracks the TRK/REF input signal. Decouple TRK/REF with a ceramic capacitor, placed as close to TRK/REF as possible. The capacitance of this capacitor determines the soft-start time (t_{SS}). See the Soft Start (SS) section on page 15 for more details.
25	RGND	**Differential remote sense negative input.** Directly connect RGND to the negative side of the voltage sense point. Short RGND to GND if the remote sense function is not used.
26	FB	**Feedback (differential remote sense positive input).** An external resistor divider from the output to RGND (tapped to FB) sets V_{OUT}. It is recommended to place the resistor divider as close to FB as possible. Avoid placing vias on the FB traces.

MPS Proprietary Information. Patent Protected. Unauthorized Photocopy and Duplication Prohibited.
© 2023 MPS. All Rights Reserved.

ABSOLUTE MAXIMUM RATINGS (2)

Supply voltage (V_{IN} to GND) .....-0.3V to +18V
V_{SW} to GND (DC) .....-0.3V to V_{IN} + 0.3V
V_{SW} to GND (25ns).....-5V to +25V
V_{CC} 4.5V
V_{OUT}..... 6V
All other pins .....-0.3V to +4.3V
Continuous power dissipation (T_A = 25°C) (7)
…….....9.25W
Junction temperature .....170°C
Lead temperature .....260°C
Storage temperature..... -55°C to +170°C

ESD Ratings

Human body model (HBM) ..... ±2kV
Charged device model (CDM) ..... ±2kV

Recommended Operating Conditions (3)

Supply input voltage (V_{IN}) .....4V to 16V
V_{IN} (DC) - V_{SW} (DC) .....-0.3V to V_{IN} + 0.3V
V_{SW} (DC) .....-0.3V to V_{IN} + 0.3V
Output voltage (V_{OUT}).....0.6V to 5.5V
External VCC bias (V_{CC_EXT}).....3.12V to 3.6V
EN voltage (4) (V_{EN})..... 3.6V
Operating junction temp (T_J).... -40°C to +125°C

Thermal Resistance (5) (6) (7) (8) (9)

LGA-29 (7mmx7mmx4.4mm)
θ_{JA} ..... 15.67°C/W
θ_{JC_TOP} ..... 3.11°C/W
θ_{JB} ..... 7.7°C/W

Notes:

2) Exceeding these ratings may damage the device.
3) The device is not guaranteed to function outside of its operating conditions.
4) The EN pin has an embedded Zener diode to clamp the voltage at 3.6V. See the EN Configuration section on page 17 for the current limit.
5) θ_{JA} is the junction-to-ambient thermal resistance, θ_{JC_TOP} is the junction-to-case top thermal characterization parameter, and θ_{JB} is the junction-to-board thermal characterization parameter.
6) The thermal parameter is based on tests on MPS's evaluation board (EVM3683-20-MN-00B) under no airflow cooling conditions in a standard enclosure. The board size is 6.1cmx6.1cm, 6-layer.
7) The maximum allowable power dissipation is a function of the maximum junction temperature, T_J (MAX), the junction-to-ambient thermal resistance, θ_{JA}, and the ambient temperature, T_A. The maximum allowable continuous power dissipation at any ambient temperature is calculated by P_D (MAX) = (T_J (MAX) - T_A) / θ_{JA}. Exceeding the maximum allowable power dissipation can produce an excessive die temperature.
8) The junction-to-case top thermal characterization parameter, θ_{JC_TOP}, estimates the junction temperature in the real system, based on the equation $T_J = \theta_{JC_TOP} \times P_{LOSS} + T_{CASE_TOP}$. Where P_{LOSS} is the module's entire power loss in a real application, and T_{CASE_TOP} is the case top temperature.
9) The junction-to-board thermal characterization parameter, θ_{JB}, estimates the junction temperature in the real system, based on equation $T_J = \theta_{JB} \times P_{LOSS} + T_{BOARD}$. Where P_{LOSS} is the module's entire power loss in a real application, and T_{BOARD} is the board temperature.

MPS Proprietary Information. Patent Protected. Unauthorized Photocopy and Duplication Prohibited.
© 2023 MPS. All Rights Reserved.

ELECTRICAL CHARACTERISTICS

Typical value is tested at T_J = 25°C, V_{IN} = 12V, V_{OUT} = 1.2V, T_J = -40°C to +125°C (10), unless otherwise noted.

Parameters	Symbol	Condition	Min	Typ	Max	Units
Supply Current						
Supply current (shutdown)	I_S	V_{EN} = 0V		10	20	μA
Supply current (quiescent)	I_Q	V_{EN} = 2V, V_{FB} = 0.62V		650	850	μA
MOSFET						
Switch leakage	SW_{LKG_HS}	V_{EN} = 0V, V_{SW} = 0V		0	10	μA
	SW_{LKG_LS}	V_{EN} = 0V, V_{SW} = 12V		0	30	
High-side (HS) on resistance	$R_{DS_ON_HS}$	V_{EN} = 2V at 25°C		8.6		mΩ
Low-side (LS) on resistance	$R_{DS_ON_LS}$	V_{EN} = 2V at 25°C		2.5		mΩ
Current Limit						
Current limit threshold	V_{LIM}		1.15	1.2	1.25	V
I_{CS} to I_{OUT} ratio	I_{CS}/I_{OUT}	I_{OUT} ≥ 2A	9	10	11	μA/A
Low-side negative current limit	I_{LIM_NEG}			-18		A
Negative current limit timeout (11)	t_{NCL_TIMER}			200		ns
Switching Frequency						
Switching frequency (10)	f_{SW}	MODE = GND, I_{OUT} = 0A, V_{OUT} = 1V	480	600	720	kHz
		MODE = 34.8kΩ, I_{OUT} = 0A, V_{OUT} = 1V	680	800	920	kHz
		MODE = 80.6kΩ, I_{OUT} = 0A, V_{OUT} = 1V	850	1000	1150	kHz
Minimum on time (10)	t_{ON_MIN}	V_{FB} = 500mV			65	ns
Minimum off time (10)	t_{OFF_MIN}	V_{FB} = 500mV			190	ns
Over-Voltage Protection (OVP) and Under-Voltage Protection (UVP)						
OVP threshold	V_{OVP}		113%	116%	119%	V_{REF}
UVP threshold	V_{UVP}		77%	80%	83%	V_{REF}
Feedback Voltage and Soft Start						
Feedback voltage	V_{REF}	T_J = -40°C to +125°C	594	600	606	mV
		T_J = 0°C to 70°C	597	600	603	mV
TRK/REF sourcing current	I_{TRACK_SOURCE}	$V_{TRK/REF}$ = 0V		42		μA
TRK/REF sinking current	I_{TRACK_SINK}	$V_{TRK/REF}$ = 1V		12		μA
Soft-start time	t_{SS}	T_J = 25°C		1.6		ms
Error Amplifier (EA)						
EA offset	V_{OS}		-3	0	+3	mV
Feedback current	I_{FB}	V_{FB} = V_{REF}		10	100	nA

MPS Proprietary Information. Patent Protected. Unauthorized Photocopy and Duplication Prohibited.
© 2023 MPS. All Rights Reserved.

ELECTRICAL CHARACTERISTICS *(continued)*

Typical value is tested at T_J = 25°C, V_{IN} = 12V, V_{OUT} = 1.2V, T_J = -40°C to +125°C (10), unless otherwise noted.

Parameters	Symbol	Condition	Min	Typ	Max	Units
Enable and Under-Voltage Lockout (UVLO)						
Enable input rising threshold	VIH_{EN}		1.17	1.22	1.27	V
Enable hysteresis	V_{EN-HYS}			200		mV
Enable input current	I_{EN}	V_{EN} = 2V		0		µA
V_{IN} UVLO						
V_{IN} UVLO threshold rising	VIN_{VTH_RISE}	V_{CC} = 3.3V	2.1	2.4	2.7	V
V_{IN} UVLO threshold falling	VIN_{VTH_FALL}		1.55	1.85	2.15	
VCC Regulator						
V_{CC} UVLO threshold rising	VCC_{VTH_RISE}		2.65	2.8	2.95	V
V_{CC} UVLO threshold falling	VCC_{VTH_FALL}		2.35	2.5	2.65	V
VCC regulator	V_{CC}		2.88	3	3.12	V
VCC load regulation		I_{CC} = 25mA		0.5		%
Power Good (PG)						
PG high threshold	$PG_{VTH_HI_RISE}$	FB from low to high	89.5%	92.5%	95.5%	V_{REF}
PG low threshold	$PG_{VTH_LO_RISE}$	FB from low to high	113%	116%	119%	V_{REF}
	$PG_{VTH_LO_FALL}$	FB from high to low	77%	80%	83%	V_{REF}
PG low-to-high delay	PG_{TD}	T_J = 25°C	0.63	0.9	1.17	ms
PG sink current capability	V_{PG}	I_{PG} = 10mA			0.5	V
PG leakage current	I_{PG_LEAK}	V_{PG} = 3.3V			3	µA
PG low-level output voltage	V_{OL_100}	V_{IN} = 0V, pull PGOOD up to 3.3V through a 100kΩ resistor at 25°C		650	800	mV
	V_{OL_10}	V_{IN} = 0V, pull PGOOD up to 3.3V through a 10kΩ resistor at 25°C		750	900	mV
Thermal Protection						
Thermal shutdown (11)	T_{SD}			160		°C
Thermal shutdown hysteresis (11)				30		°C

Notes:

10) Guaranteed by over-temperature (OT) correlation. Not tested in production.
11) Guaranteed by sample characterization. Not tested in production.

MPS Proprietary Information. Patent Protected. Unauthorized Photocopy and Duplication Prohibited.
© 2023 MPS. All Rights Reserved.

TYPICAL CHARACTERISTICS

V_{IN} = 12V, V_{OUT} = 1.2V, C_{OUT} = 10 x 47µF ceramic + 220µF electrolytic, FCCM, f_{SW} = 1000kHz, T_A = 25°C, unless otherwise noted.

Efficiency vs. Load Current

V_{OUT} = 0.75V

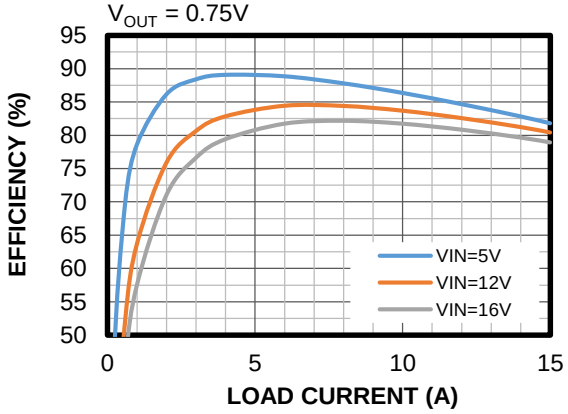

Efficiency vs. Load Current

V_{OUT} = 1.2V

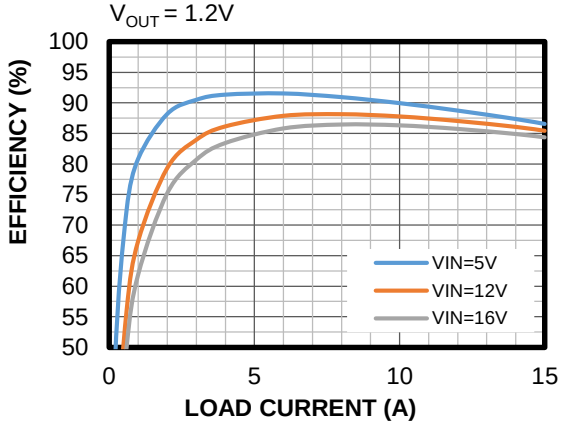

Efficiency vs. Load Current

V_{OUT} = 1.8V

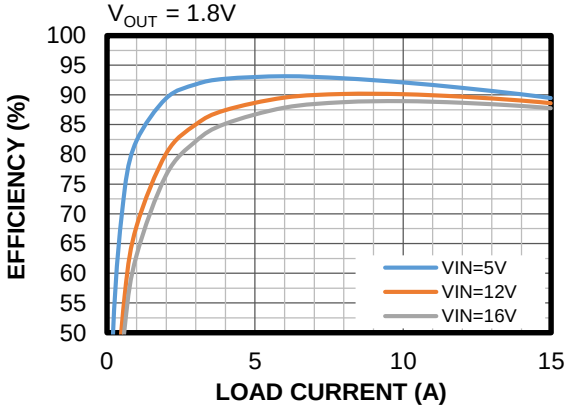

Efficiency vs. Load Current

V_{OUT} = 2.5V

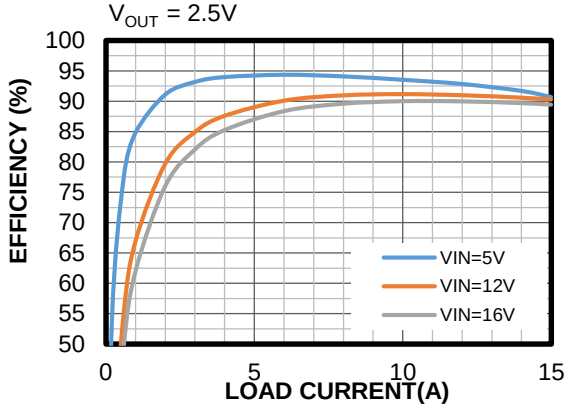

Efficiency vs. Load Current

V_{OUT} = 3.3V

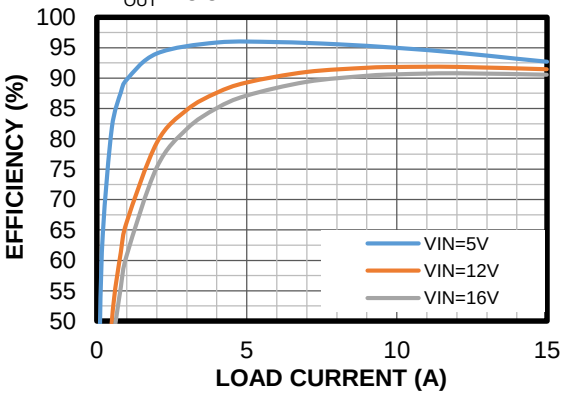

Efficiency vs. Load Current

V_{OUT} = 5.5V

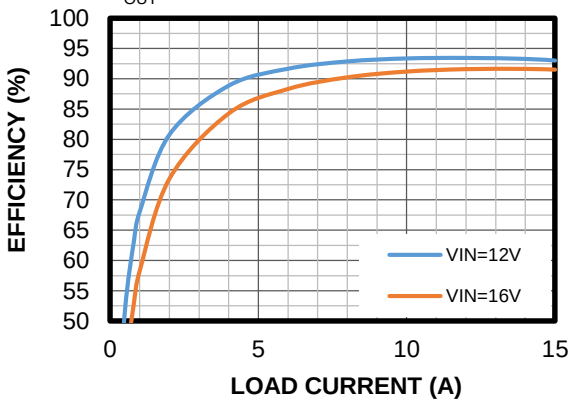

MPS Proprietary Information. Patent Protected. Unauthorized Photocopy and Duplication Prohibited.
© 2023 MPS. All Rights Reserved.

TYPICAL CHARACTERISTICS *(continued)*

V_{IN} = 12V, V_{OUT} = 1.2V, C_{OUT} = 10 x 47µF ceramic + 220µF electrolytic, FCCM, f_{SW} = 1000kHz, T_A = 25°C, unless otherwise noted.

Load Regulation vs. Load Current

V_{IN} = 12V

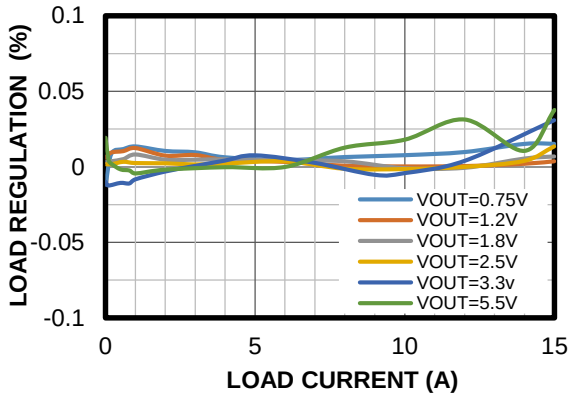

Line Regulation vs. Input Voltage

I_{OUT} = 15A

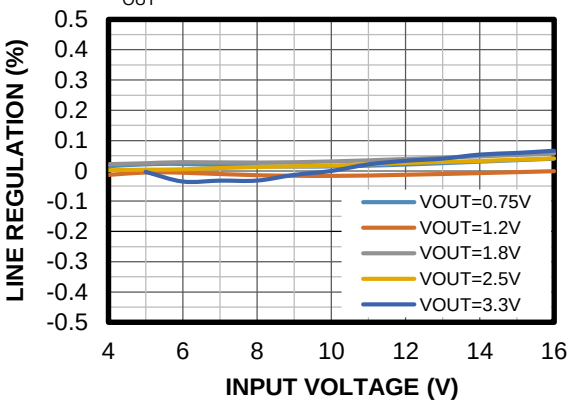

Case Temperature Rise vs. Load Current

V_{IN} = 12V

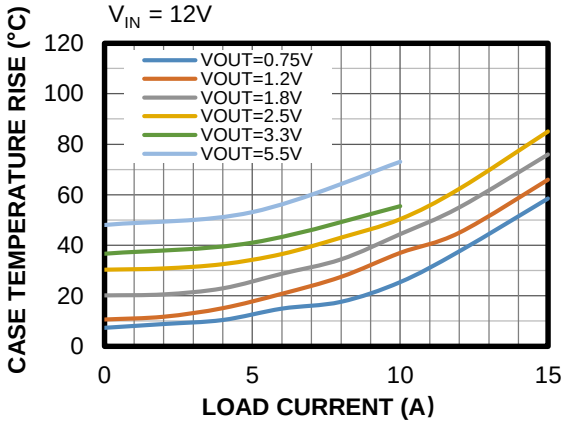

Thermal Derating

Air flow, V_{IN} = 12V

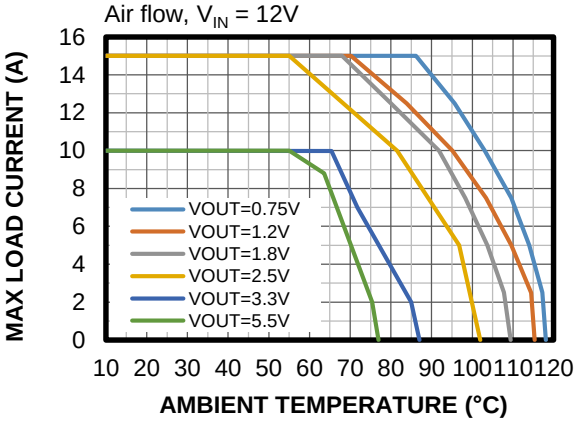

MPS Proprietary Information. Patent Protected. Unauthorized Photocopy and Duplication Prohibited.
© 2023 MPS. All Rights Reserved.

TYPICAL PERFORMANCE CHARACTERISTICS

V_{IN} = 12V, V_{OUT} = 1.2V, C_{OUT} = 10 x 47µF ceramic + 220µF electrolytic, FCCM, f_{SW} = 1000kHz, T_A = 25°C, unless otherwise noted.

Ripple
I_{OUT} = 0A

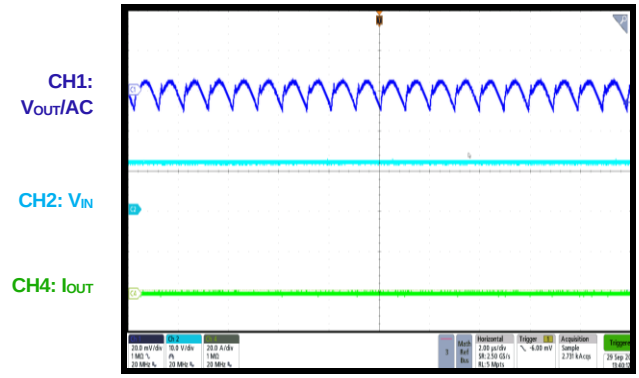

Ripple
I_{OUT} = 15A

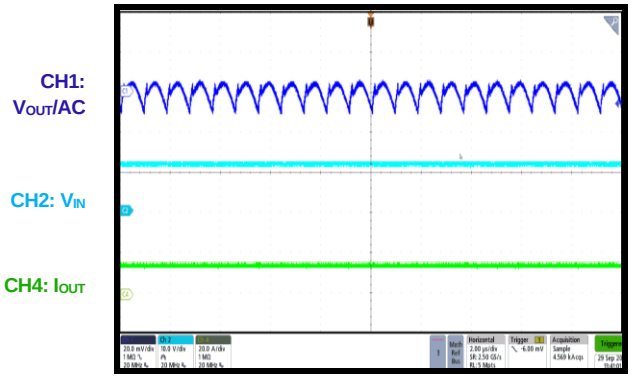

Start-Up through VIN
I_{OUT} = 0A

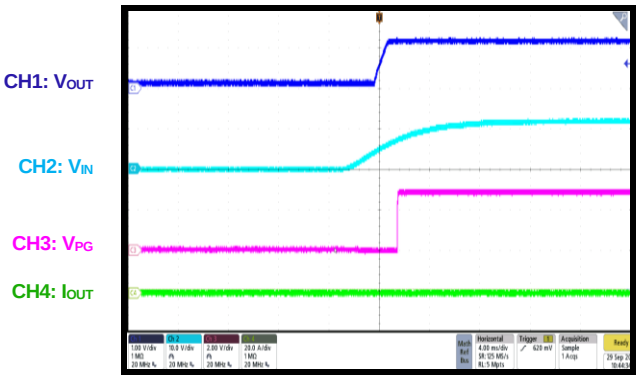

Start-Up through VIN
I_{OUT} = 15A

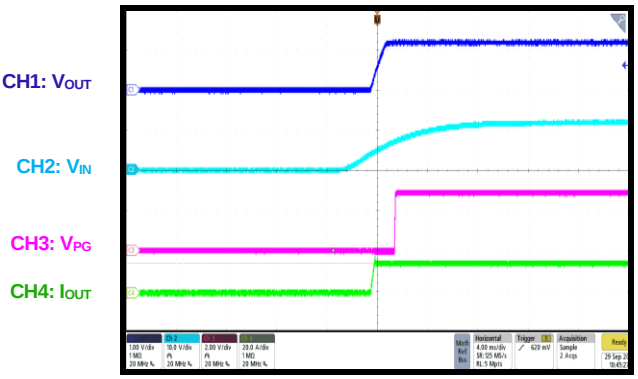

Shutdown through VIN
I_{OUT} = 0A

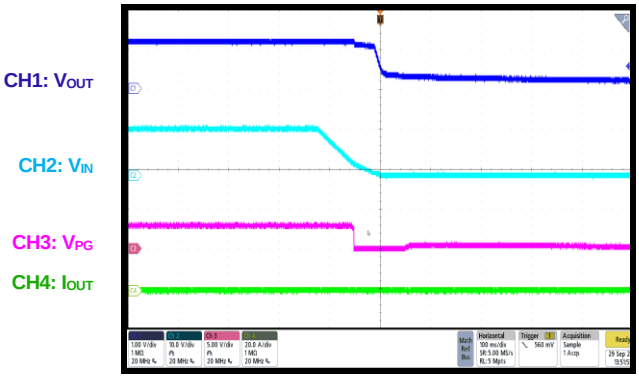

Shutdown through VIN
I_{OUT} = 15A

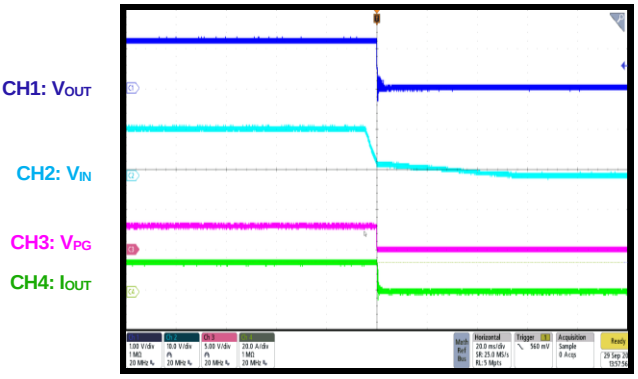

MPS Proprietary Information. Patent Protected. Unauthorized Photocopy and Duplication Prohibited.
© 2023 MPS. All Rights Reserved.

TYPICAL PERFORMANCE CHARACTERISTICS *(continued)*

V_{IN} = 12V, V_{OUT} = 1.2V, C_{OUT} = 10 x 47µF ceramic + 220µF electrolytic, FCCM, f_{SW} = 1000kHz, T_A = 25°C, unless otherwise noted.

Start-Up through EN
I_{OUT} = 0A

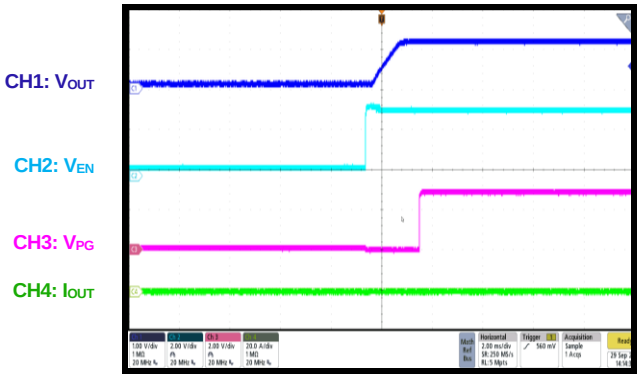

Start-Up through EN
I_{OUT} = 15A

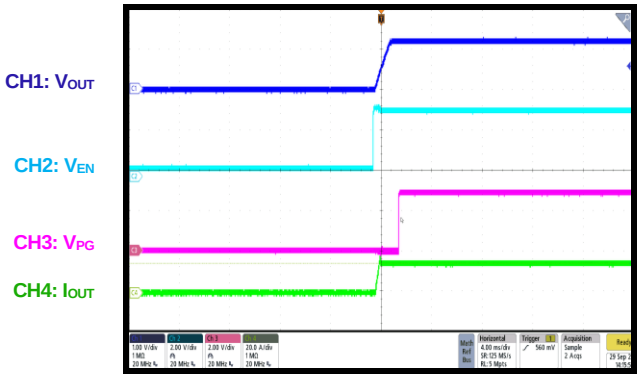

Shutdown through EN
I_{OUT} = 0A

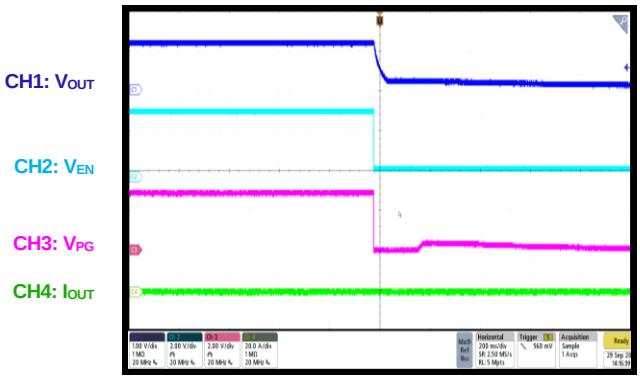

Shutdown through EN
I_{OUT} = 15A

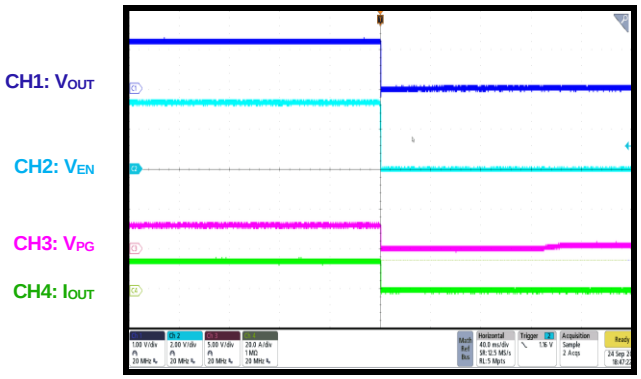

SCP Entry
I_{OUT} = 15A

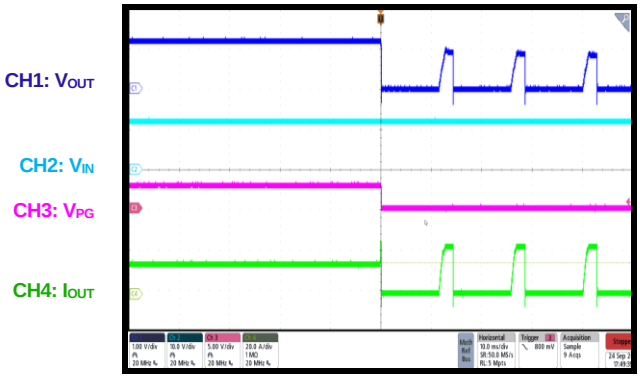

SCP Recovery
I_{OUT} = 15A

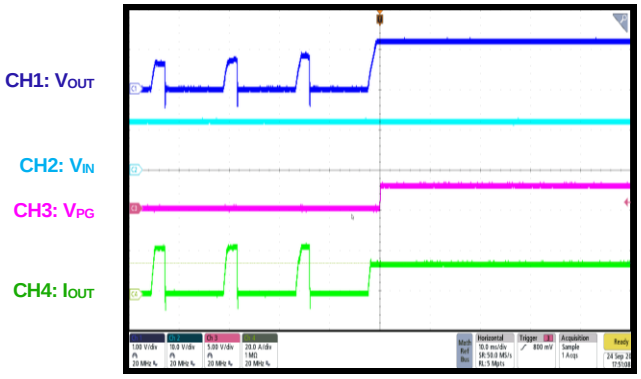

MPS Proprietary Information. Patent Protected. Unauthorized Photocopy and Duplication Prohibited.
© 2023 MPS. All Rights Reserved.

TYPICAL PERFORMANCE CHARACTERISTICS *(continued)*

V_{IN} = 12V, V_{OUT} = 1.2V, C_{OUT} = 10 x 47µF ceramic + 220µF electrolytic, FCCM, f_{SW} = 1000kHz, T_A = 25°C, unless otherwise noted.

SCP Steady State

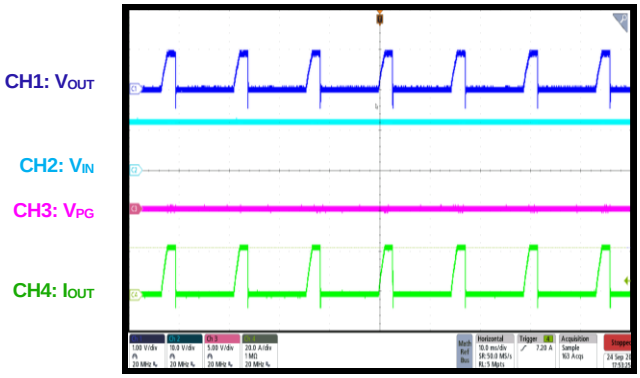

Load Transient

I_{OUT} = 0A to 10A, 2.5A/µs-Eload, C_{FF} = 1nF

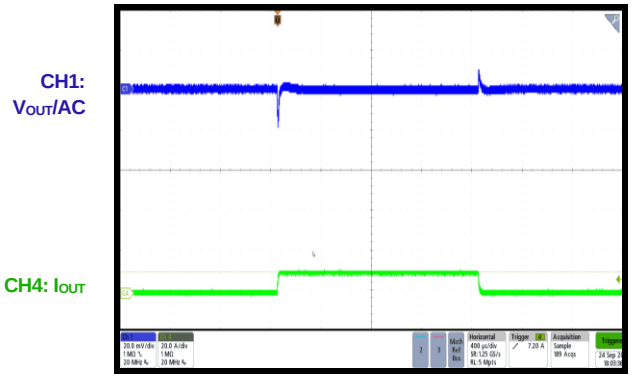

MPS Proprietary Information. Patent Protected. Unauthorized Photocopy and Duplication Prohibited.
© 2023 MPS. All Rights Reserved.

FUNCTIONAL BLOCK DIAGRAM

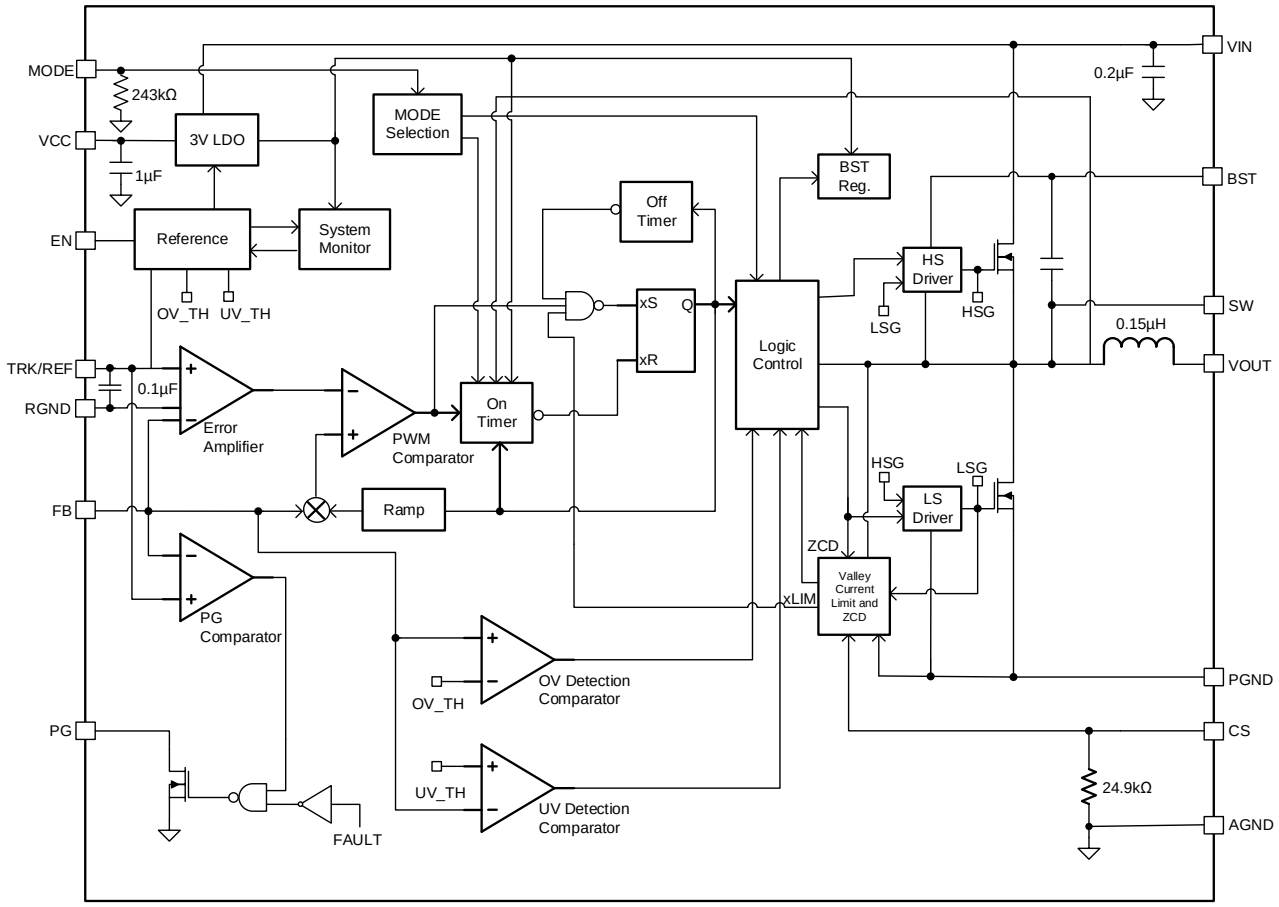

Figure 1: Functional Block Diagram

MPS Proprietary Information. Patent Protected. Unauthorized Photocopy and Duplication Prohibited.
© 2023 MPS. All Rights Reserved.

OPERATION

Constant-On-Time (COT) Control

The MPM3683-20 employs constant-on-time (COT) control to achieve a fast load transient response (see Figure 2).

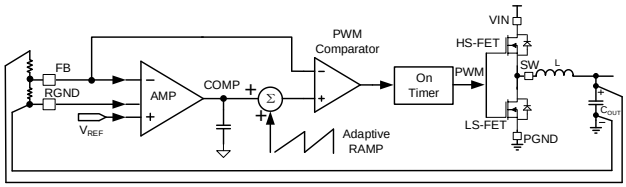

Figure 2: COT Control

The operational amplifier (op amp) corrects any voltage error between the FB pin and the reference voltage (V_{REF}). By working with the op amp, the MPM3683-20 can provide excellent load regulation across the entire load range, regardless of whether it is operating in forced continuous conduction mode (FCCM) or pulse-skip mode (PSM).

The dedicated RGND pin helps to provide feedback remote GND sensing. The pair of remote sense traces should be kept at a low impedance to optimize performance.

The MPM3683-20 uses internal ramp compensation to support low-ESR, MLCC output capacitor solutions. The adaptive, internal ramp is optimized so that the MPM3683-20 is stable across the entire operating input voltage (V_{IN}) and output voltage (V_{OUT}) ranges, provided the proper design of the output filter.

Pulse-Width Modulation (PWM) Operation

Figure 3 shows how the pulse-width modulation (PWM) is generated under heavy loads.

The op amp corrects any error between FB and REF, and generates a fairly smooth DC voltage (V_{COMP}). The internal ramp is superimposed onto V_{COMP}, then the superimposed V_{COMP} is compared with the FB signal.

When the FB voltage (V_{FB}) drops below the superimposed V_{COMP}, the integrated high-side MOSFET (HS-FET) turns on. The HS-FET remains on for a fixed on time, which is determined by V_{IN}, V_{OUT}, and the selected switching frequency (f_{SW}). After the on period elapses, the HS-FET turns off. It turns on again when V_{FB} drops below the superimposed V_{COMP}.

By repeating this operation, the MPM3683-20 regulates V_{OUT}.

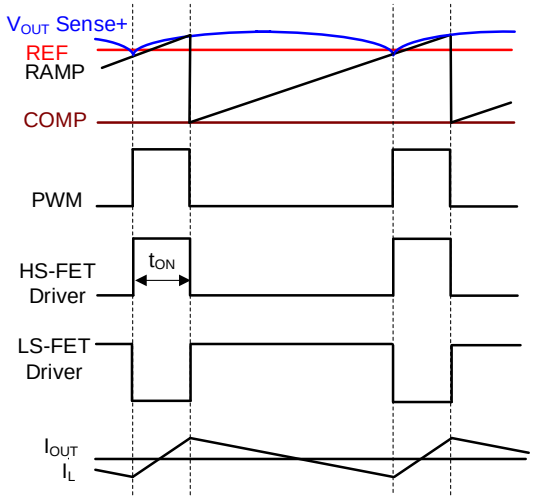

Figure 3: Heavy-Load Operation (PWM)

The integrated low-side MOSFET (LS-FET) turns on when the HS-FET is off to minimize conduction loss. If the HS-FET and LS-FET are turned on simultaneously, then a dead short occurs between VIN and PGND; this is called shoot-through. To avoid shoot-through, a dead time (DT) is generated internally between the HS-FET off and LS-FET on period, or vice versa.

Continuous Conduction Mode (CCM)

Continuous conduction mode (CCM) occurs when the output current (I_{OUT}) is high and the inductor current (I_L) remains above 0A. The MPM3683-20 can also be configured to operate in FCCM when I_{OUT} is low (see the Mode Selection section on page 15 for more details).

In CCM, f_{SW} is fairly constant (PWM mode), so the output ripple remains almost constant across the entire load range.

Pulse-Skip Mode (PSM)

Under light-load conditions, the MPM3683-20 can be configured to work in pulse-skip mode (PSM) to optimize efficiency. When the load decreases, I_L also decreases. Once I_L reaches 0A, the MPM3683-20 transitions from CCM to PSM, provided that it has been configured accordingly (see the Mode Selection section on page 15 for more details).

MPS Proprietary Information. Patent Protected. Unauthorized Photocopy and Duplication Prohibited.
© 2023 MPS. All Rights Reserved.

Figure 4 shows PSM operation under light-loads.

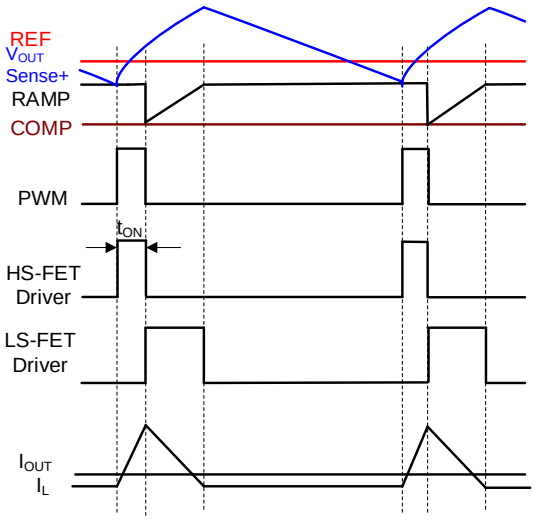

Figure 4: PSM Under Light Loads

When V_{FB} drops below the superimposed V_{COMP}, the HS-FET turns on for a fixed interval. When the HS-FET turns off, the LS-FET turns on until I_L reaches 0A. In PSM, V_{FB} does not reach the superimposed V_{COMP} while I_L is approaching 0A.

The LS-FET driver enters tri-state (Hi-Z) when I_L reaches 0A. A current modulator takes over control of the LS-FET and limits I_L below -1mA. Therefore, the output capacitor (C_{OUT}) discharges slowly to PGND through the LS-FET. Under light-load conditions, the HS-FET does not turn on as frequently in PSM compared to FCCM. As a result, efficiency in PSM is significantly improved when compared to FCCM.

As I_{OUT} increases under light-load conditions, the current modulator regulation period becomes shorter, the HS-FET turns on more frequently, and f_{SW} increases accordingly. I_{OUT} reaches its critical level when the current modulator time is 0s. The I_{OUT} critical level ($I_{OUT_CRITICAL}$) can be calculated using Equation (1):

$$I_{OUT_CRITICAL} = \frac{(V_{IN} - V_{OUT}) \times V_{OUT}}{2 \times L \times f_{SW} \times V_{IN}} \quad (1)$$

Where f_{SW} is the switching frequency, and L = 0.15µH represents the inductance of the integrated inductor.

The MPM3683-20 enters PWM mode once I_{OUT} exceeds its critical level. Afterward, f_{SW} remains fairly constant across the I_{OUT} range.

The MPM3683-20 can be configured to operate in FCCM even under light-load conditions (see Table 1).

Mode Selection

The MPM3683-20 provides both FCCM and PSM for light-load conditions. The MPM3683-20 has three options for f_{SW} selection: 600kHz, 800kHz, and 1000kHz. Select the operation mode for light-load conditions and f_{SW} by choosing the value of the resistor placed between MODE and AGND or VCC (see Table 1).

Table 1: MODE Selection

MODE	Light-Load Mode	f_{SW}
VCC	PSM	600kHz
Float	PSM	800kHz
243kΩ (±20%) to GND	PSM	1000kHz
GND	FCCM	600kHz
34.8kΩ (±20%) to GND	FCCM	800kHz
80.6kΩ (±20%) to GND	FCCM	1000kHz

Soft Start (SS)

With the integrated 100nF soft-start capacitor, the minimum soft-start time (t_{SS}) is limited to 1.6ms. t_{SS} can be increased by adding an external capacitor between TRK/REF and AGND.

The soft-start capacitor (C_{SS}) can be estimated with Equation (2):

$$C_{SS}(nF) = \frac{t_{SS}(ms) \times 36\mu A}{0.6V} - 100nF \quad (2)$$

Output Voltage (V_{OUT}) Tracking and Reference

The MPM3683-20 provides an analog input pin (TRK/REF) to track another power supply or accept an external reference. When an external voltage signal is connected to TRK/REF, it acts as a reference for the MPM3683-20's V_{OUT}. V_{FB} follows this external voltage signal exactly, and the SS settings are ignored. The TRK/REF input signal is between 0.3V and 1.4V.

MPS Proprietary Information. Patent Protected. Unauthorized Photocopy and Duplication Prohibited.
© 2023 MPS. All Rights Reserved.

During initial start-up, the TRK/REF voltage must first reach or exceed 600mV to ensure proper operation. Afterward, the voltage can be any value between 0.3V and 1.4V.

Pre-Biased Start-Up

The MPM3683-20 is designed for monotonic start-up into pre-biased loads. If the output is pre-biased to a certain voltage during start-up, the IC disables the HS-FET and LS-FET switching until the voltage on the TRK/REF pin exceeds the sensed output voltage at the FB pin.

Before the TRK/REF voltage reaches the pre-biased FB level, if the BST voltage (from BST to SW) is below 2.3V, the LS-FET turns on to allow the BST voltage to be charged through VCC. The LS-FET turns on for very narrow pulses, so the drop-in pre-biased level is negligible.

Current Sense (CS) and Over-Current Protection (OCP)

The MPM3683-20 features on-die current sensing and a configurable over-current protection (OCP) threshold for the inductor valley current.

OCP is active when the MPM3683-20 is enabled. When the LS-FET is on, I_L is sensed and mirrored on the CS pin with the current-sense gain (G_{CS}) ratio. By connecting a resistor (R_{CS}) between the CS and AGND pins, a voltage (V_{CS}) that is proportional to the cycle-by-cycle I_L is generated. The HS-FET can only turn on when V_{CS} is below the internal OVP threshold (V_{OCP}) (during the LS-FET on state) to limit the inductor valley current cycle by cycle. The MPM3683-20 integrates a 24.9kΩ current-sense resistor between the CS and AGND pins.

The OCP threshold for the inductor valley current can be calculated with Equation (3):

$$I_{VALLEY} = \frac{V_{OCP}}{R_{CS}(M\Omega) // 0.0249 \times G_{CS}} \quad (3)$$

Estimate the value of R_{CS} for the target output current limit (I_{LIM}) with Equation (4):

$$R_{CS}(M\Omega) // 0.0249 = \frac{V_{OCP}}{G_{CS} \times (I_{LIM} - \frac{(V_{IN} - V_{OUT}) \times V_{OUT}}{V_{IN}} \times \frac{1}{2 \times L(\mu H) \times f_{SW}(MHz)})} \quad (4)$$

Where V_{OCP} = 1.2V, G_{CS} = 10μA/A, L = 0.15μH, and I_{LIM} is the target output current limit (in A).

Note that the MPM3683-20 provides accurate cycle-by-cycle OCP for the inductor valley current. However, the conversion between the inductor valley current and I_{OUT} may involve an error that is introduced by the tolerance of the integrated inductor and f_{SW} variation due to COT operation.

OCP hiccup mode is active 3ms after the MPM3683-20 is enabled. Once OCP hiccup mode is active, if the MPM3683-20 detects an OC condition for 31 consecutive cycles, it enters hiccup mode.

In hiccup mode, the MPM3683-20 latches off the HS-FET immediately and latches off the LS-FET after zero-current detection (ZCD). Meanwhile, the TRK/REF capacitor discharges. After about 11ms, the MPM3683-20 attempts to soft start automatically. If the OC condition still remains after 3ms, the MPM3683-20 repeats this operation until the OC condition is removed. Then V_{OUT} rises back to the regulation level smoothly.

Negative Inductor Current Limit

When the LS-FET detects a -18A (typical) current, the MPM3683-20 turns off the LS-FET for 200ns to limit the negative current.

Over-Voltage Protection (OVP)

The MPM3683-20 monitors V_{OUT} by connecting FB to the tap of the output voltage feedback resistor divider to detect an over-voltage (OV) condition. The device provides OVP with hiccup mode.

If V_{FB} exceeds 116% of V_{REF}, OVP is triggered. The PG pin pulls down until it reaches the low-side negative current limit (NOCP). Then the LS-FET turns off for 200ns. The HS-FET turns on during this period. After 200ns, the LS-FET turns on again. The MPM3683-20 repeats this operation to discharge any OV condition on the output.

The MPM3683-20 exits OVP discharge mode when V_{FB} drops below 105% of V_{REF}.

Over-Temperature Protection (OTP)

The MPM3683-20 features over-temperature protection (OTP).

MPS Proprietary Information. Patent Protected. Unauthorized Photocopy and Duplication Prohibited.
© 2023 MPS. All Rights Reserved.

The MPM3683-20 monitors the junction temperature internally. If the junction temperature exceeds the threshold value (typically 160°C), the converter shuts off and discharges the TRK/REF capacitors. OTP is a non-latch protection. There is a hysteresis of about 30°C. Once the junction temperature drops to about 130°C, a soft start initiates.

OTP is effective once the MPM3683-20 is enabled.

Power Good (PG)

The MPM3683-20 has a power good (PG) output. PG is the open drain of a MOSFET. Connect PG to VCC or another external voltage source (below 3.6V) through a pull-up resistor (typically 10kΩ). After applying V_{IN}, the MOSFET turns on, and PG pulls to GND before TRK/REF is ready. Once V_{FB} reaches 92.5% of V_{REF}, PG pulls high after a 0.9ms delay.

When V_{FB} drops to 80% of V_{REF} or exceeds 116% of the nominal V_{REF}, PG pulls low. PG pulls high again after the FB voltage rises to 92.5% of V_{REF} or drops to 101% of V_{REF}.

If the input supply fails to power the MPM3683-20, PG is clamped low, even though PG is tied to an external DC source through a pull-up resistor. Figure 5 shows the relationship between the PG voltage and the pull-up current.

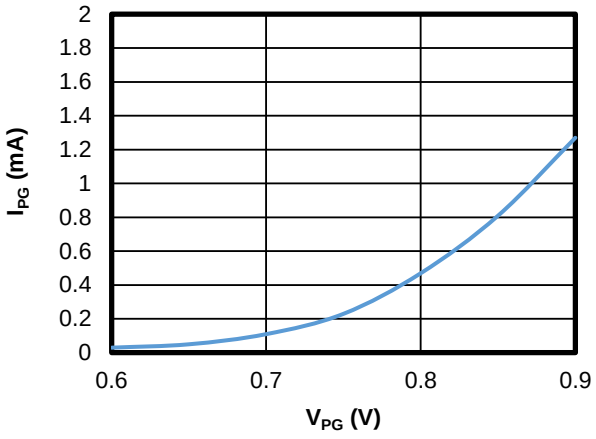

Figure 5: PG Clamped Voltage vs. Pull-Up Current

EN Configuration

The MPM3683-20 turns on when EN goes high. The MPM3683-20 turns off when EN goes low. EN cannot be left floating for proper operation. EN can be driven by an analog or digital control logic signal to enable or disable the MPM3683-20.

The MPM3683-20 provides accurate EN thresholds. A resistor divider can be connected from VIN to AGND to configure the V_{IN} at which the MPM3683-20 is enabled. This is highly recommended for applications where there is no dedicated EN control logic signal because it can prevent under-voltage lockout (UVLO) bouncing during start-up and shutdown.

The resistor divider values can be calculated with Equation (5):

$$V_{IN_START}(V) = VIH_{EN} \times \frac{R_{UP} + R_{DOWN}}{R_{DOWN}} \quad (5)$$

Where VIH_{EN} is typically 1.22V.

Select R_{UP} and R_{DOWN} such that the EN voltage does not exceed 3.6V when V_{IN} reaches its maximum value.

EN can also be directly connected to VIN through a pull-up resistor (R_{UP}). Select R_{UP} such that the maximum current going into EN is 50μA. R_{UP} can be estimated with Equation (6):

$$R_{UP}(k\Omega) = \frac{VIN_{MAX}(V)}{0.05(mA)} \quad (6)$$

MPS Proprietary Information. Patent Protected. Unauthorized Photocopy and Duplication Prohibited.
© 2023 MPS. All Rights Reserved.

APPLICATION INFORMATION

Setting the Output Voltage (V_{OUT})

Figure 6 shows the circuit connection for V_{OUT}.

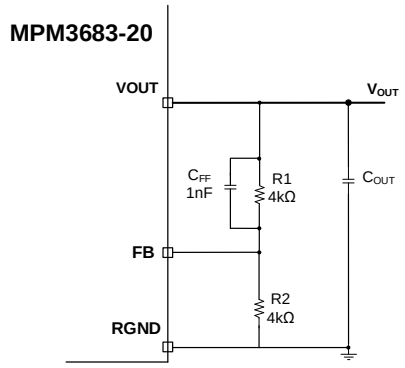

Figure 6: Circuit Connection

R2 can be calculated with Equation (7):

$$R_2(k\Omega) = \frac{V_{REF}}{V_{OUT} - V_{REF}} \times R_1(k\Omega) \quad (7)$$

Where V_{REF} = 0.6V.

To optimize the load transient response, it is recommended to place a feed-forward capacitor (C_{FF}) in parallel with R_1. R_1 and C_{FF} add an extra zero (f_Z) to the system, which improves loop response. R_1 and C_{FF} are selected such that the zero formed by R_1 and C_{FF} is between 20kHz and 60kHz. Estimate f_Z with Equation (8):

$$f_Z = \frac{1}{2\pi \times R_1 \times C_{FF}} \quad (8)$$

Table 3 shows the values of feedback resistors and feed-forward capacitor for common output voltages.

Table 3: Setting Common Output Voltages

V_{OUT} (V)	C_{FF} (nF)	R1 (kΩ)	R2 (kΩ)
0.75	1	4	16
1.2	1	4	4
1.8	1	4	2
2.5	1	6.3	2
3.3	0.068	9	2
5.5	0.068	10.2	1.24

Selecting the Input Capacitor

The step-down converter has a discontinuous input current, and requires a capacitor to supply AC current to the converter while maintaining the DC input voltage. Use ceramic capacitors for the best performance. During the layout, place the input capacitors as close to VIN as possible.

The capacitance can vary significantly with the temperature. Capacitors with X5R and X7R ceramic dielectrics are recommended because they are fairly stable across a wide temperature range and offer very low ESR.

The capacitors must have a ripple current rating that exceeds the converter's maximum input ripple current. Calculate the input ripple current with Equation (9):

$$I_{CIN} = I_{OUT} \times \sqrt{\frac{V_{OUT}}{V_{IN}} \times (1 - \frac{V_{OUT}}{V_{IN}})} \quad (9)$$

The worst-case condition occurs at V_{IN} = 2 x V_{OUT}, estimated with Equation (10):

$$I_{CIN} = \frac{I_{OUT}}{2} \quad (10)$$

For simplification, choose an input capacitor with an RMS current rating that exceeds half of the maximum load current. The input capacitor value determines the converter's input voltage ripple. If the system has an input voltage ripple requirement, select an input capacitor that meets the specification.

Calculate the input voltage ripple with Equation (11):

$$\Delta V_{IN} = \frac{I_{OUT}}{f_{SW} \times C_{IN}} \times \frac{V_{OUT}}{V_{IN}} \times (1 - \frac{V_{OUT}}{V_{IN}}) \quad (11)$$

The worst-case condition occurs at V_{IN} = 2 x V_{OUT}, estimated with Equation (12):

$$\Delta V_{IN} = \frac{1}{4} \times \frac{I_{OUT}}{f_{SW} \times C_{IN}} \quad (12)$$

Selecting the Output Capacitor

The output capacitor maintains the DC output voltage. Use POSCAP or ceramic capacitors. Calculate the output voltage ripple with Equation (13):

$$\Delta V_{OUT} = \frac{V_{OUT}}{f_{SW} \times L} \times (1 - \frac{V_{OUT}}{V_{IN}}) \times (R_{ESR} + \frac{1}{8 \times f_{SW} \times C_{OUT}}) \quad (13)$$

MPS Proprietary Information. Patent Protected. Unauthorized Photocopy and Duplication Prohibited.
© 2023 MPS. All Rights Reserved.

When using ceramic capacitors, the capacitance dominates the impedance at the switching frequency and the output voltage ripple. For simplification, estimate the output voltage ripple with Equation (14):

$$\Delta V_{OUT} = \frac{V_{OUT}}{8 \times f_{SW}^{2} \times L \times C_{OUT}} \times (1 - \frac{V_{OUT}}{V_{IN}}) \quad (14)$$

When using POSCAP capacitors, the ESR dominates the impedance at the switching frequency. For simplification, the output voltage ripple can be calculated with Equation (15):

$$\Delta V_{OUT} = \frac{V_{OUT}}{f_{SW} \times L} \times (1 - \frac{V_{OUT}}{V_{IN}}) \times R_{ESR} \quad (15)$$

Where L is fixed at 0.15μH internally.

PCB Layout Guidelines

Efficient PCB layout is critical for stable operation. For the best performance, refer to Figure 7 and follow the guidelines below:

1. Place the input MLCC capacitors as close to the VIN and PGND pins as possible.
2. Place the major MLCC capacitors on the same layer as the MPM3683-20.
3. Maximize the VIN and PGND copper plane to minimize parasitic impedance.
4. Ensure that the high-current paths (PGND, VIN, and VOUT) have short, direct, and wide traces.
5. Place as many PGND vias as possible as close to PGND as possible to minimize both parasitic impedance and thermal resistance.
6. Place the external feedback resistors next to FB.
7. Route the feedback network away from the switching node.

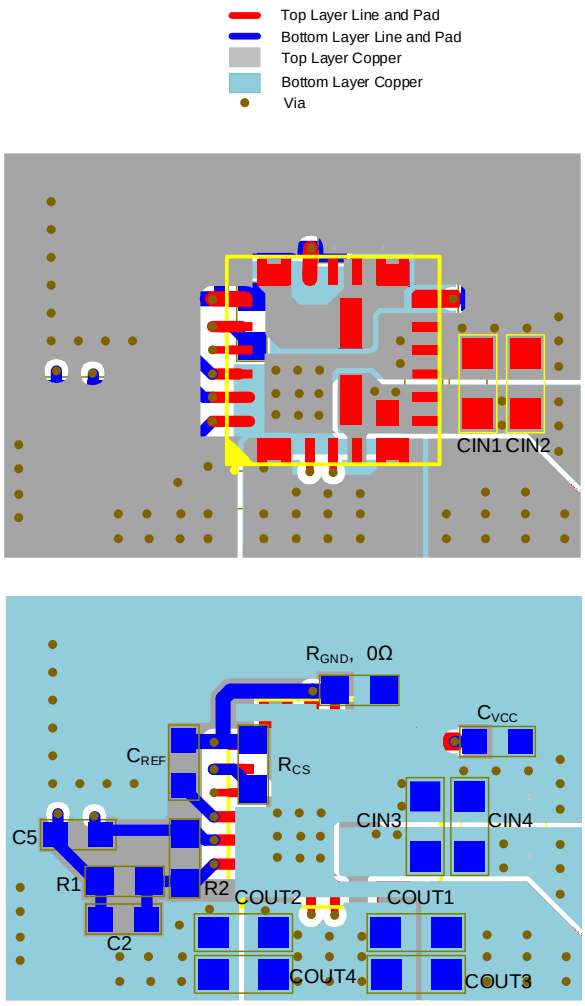

Figure 7: Recommended PCB Layout

MPS Proprietary Information. Patent Protected. Unauthorized Photocopy and Duplication Prohibited.
© 2023 MPS. All Rights Reserved.

TYPICAL APPLICATION CIRCUIT

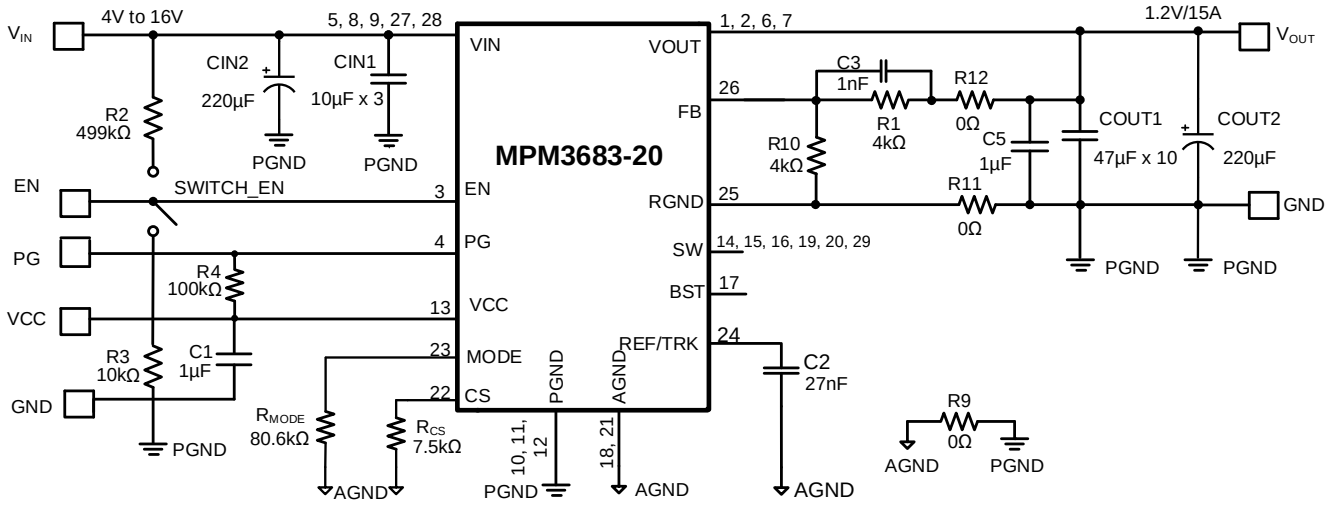

Figure 8: Typical Application Circuit (V_{IN} = 12V, 1.2V/15A Output, FCCM, 1000kHz)

MPS Proprietary Information. Patent Protected. Unauthorized Photocopy and Duplication Prohibited.
© 2023 MPS. All Rights Reserved.

PACKAGE INFORMATION

LGA-29 (7mmx7mmx4.4mm)

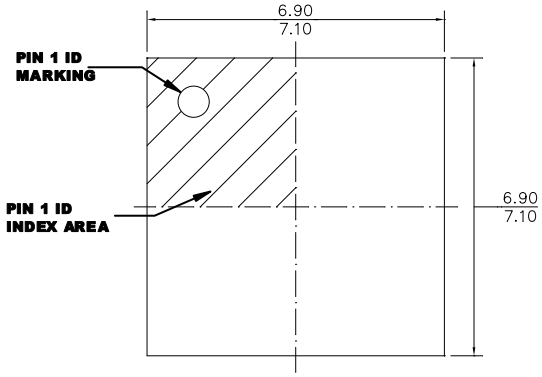

TOP VIEW

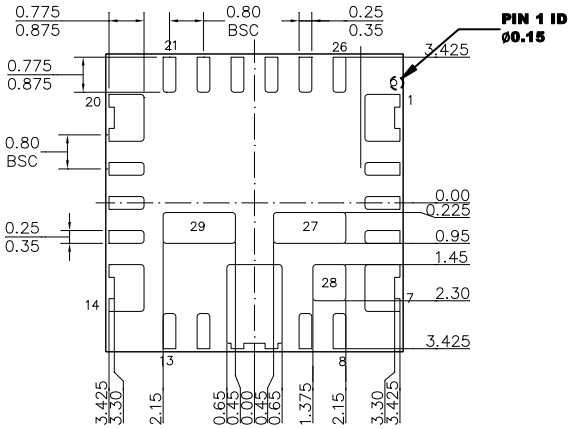

BOTTOM VIEW

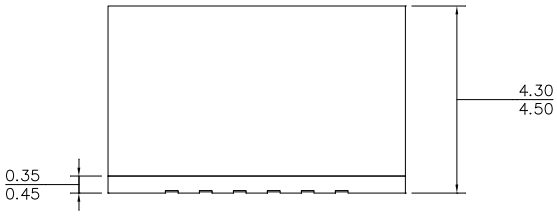

SIDE VIEW

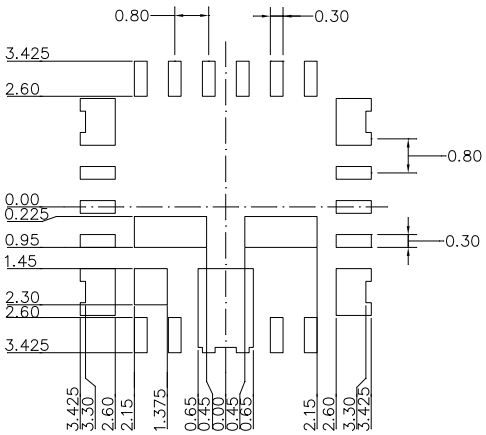

RECOMMENDED LAND PATTERN

NOTE:

1) ALL DIMENSIONS ARE IN MILLIMETERS.
2) LEAD COPLANARITY SHALL BE 0.10 MILLIMETERS MAX.
3) JEDEC REFERENCE IS MO-303.
4) DRAWING IS NOT TO SCALE.

MPS Proprietary Information. Patent Protected. Unauthorized Photocopy and Duplication Prohibited.
© 2023 MPS. All Rights Reserved.

CARRIER INFORMATION

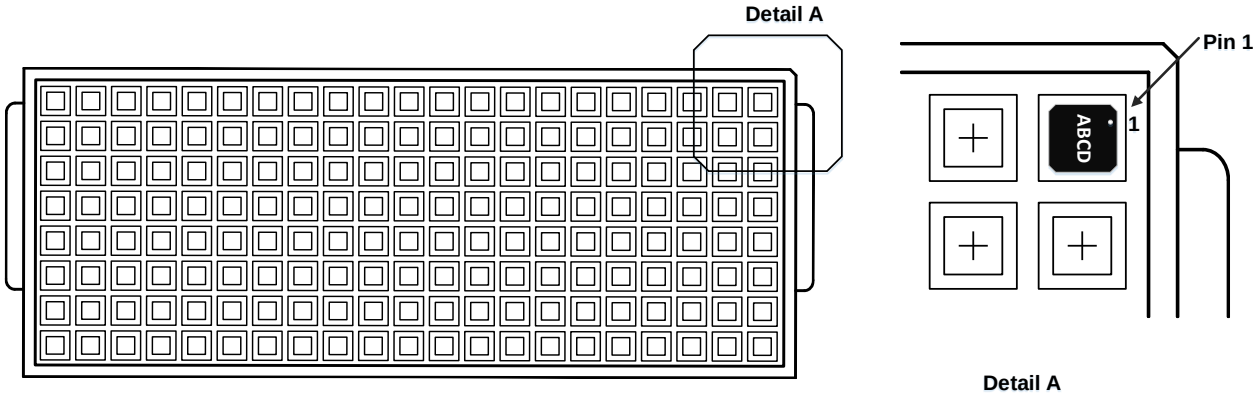

Part Number	Package Description	Quantity/ Reel	Quantity/ Tube	Quantity/ Tray	Reel Diameter	Carrier Tape Width	Carrier Tape Pitch
MPM3683GMN-20-T	LGA-29 (7mmx7mmx4.4mm)	N/A	N/A	260	N/A	N/A	N/A

Note:

12) This is a schematic of the tray. Different packages correspond to different trays, with a different length, width, and height.

MPS Proprietary Information. Patent Protected. Unauthorized Photocopy and Duplication Prohibited.
© 2023 MPS. All Rights Reserved.

REVISION HISTORY

Revision #	Revision Date	Description	Pages Updated
1.0	3/1/2023	Initial Release	-

Notice: The information in this document is subject to change without notice. Please contact MPS for current specifications. Users should warrant and guarantee that third-party Intellectual Property rights are not infringed upon when integrating MPS products into any application. MPS will not assume any legal responsibility for any said applications.

MPS Proprietary Information. Patent Protected. Unauthorized Photocopy and Duplication Prohibited.
© 2023 MPS. All Rights Reserved.