

RECOMMENDED PCB HOLE DIMENSIONS

No OF CCTS.	DIMn. A	DIMn. B
2	(8.08) .318	(5.08±0.13) .200 ±.005
3	(13.16) .518	(10.16±0.13) .400 ±.005
4	(18.24) .718	(15.24±0.13) .600 ±.005
5	(23.32) .918	(20.32±0.13) .800 ±.005
6	(28.40) 1.118	(25.40±0.15) 1.000±.006
7	(33.48) 1.318	(30.48±0.18) 1.200±.007
8	(38.56) 1.518	(35.56±0.18) 1.400±.007
9	(43.64) 1.718	(40.64±0.20) 1.600±.008
10	(48.72) 1.918	(45.72±0.20) 1.800±.008
11	(53.80) 2.118	(50.80±0.20) 2.000±.008
12	(58.88) 2.318	(55.88±0.23) 2.200±.009

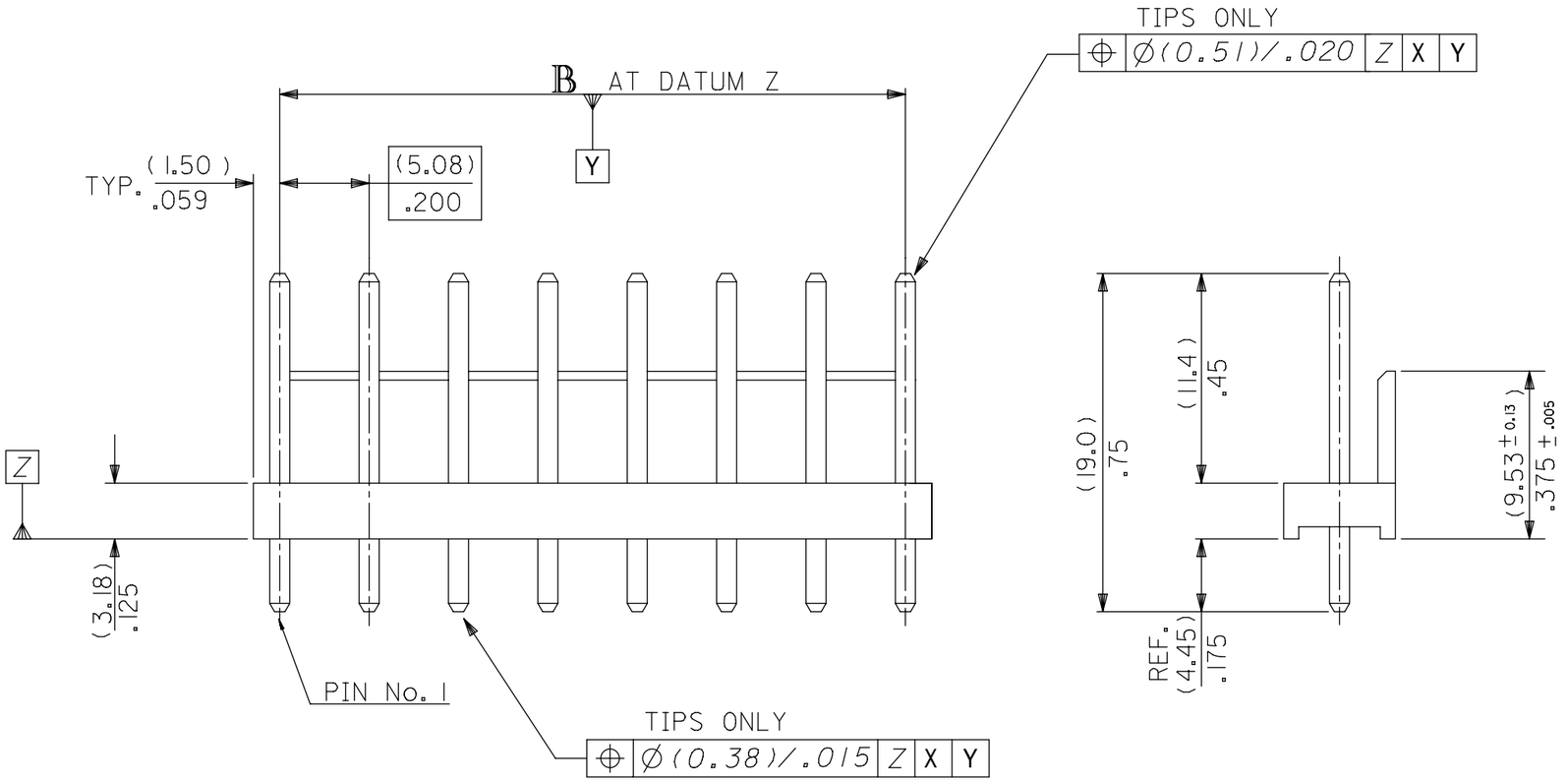

AE-2599M-N ✳-✳

NO. OF CKTS.

VERSION

VOID CKT. LOCn.

SEE SHEET 2

NOTES:
1. WAFER MATERIAL: NYLON 6/6, UL94V-2
   TERMINAL PIN: (1.14)/.045 DIA. BRASS
2. FOR PLATING, SEE CHARTS.
3. PRODUCT SPECIFICATION: PS-99020-0087
4. PIN PUSH OUT FORCE (13.34N)/3LBS. MIN.
5. PINS MUST CONFORM TO MOLEX SOLDERABILITY SPEC. ES-152.
6. RECOMMENDED PCB THICKNESS 1.6MM.
7. THIS PART CONFORMS TO CLASS B REQUIREMENTS OF COSMETIC SPECIFICATION PS-45499-002.

THIS DRAWING CONTAINS INFORMATION THAT IS PROPRIETARY TO MOLEX ELECTRONIC TECHNOLOGIES, LLC AND SHOULD NOT BE USED WITHOUT WRITTEN PERMISSION

DIMENSION UNITS: mm/IN	SCALE: 1:1	CURRENT REV DESC: REMOVED OBSOLETED PART NUMBERS AS PER REQUEST.	molex
GENERAL TOLERANCES (UNLESS SPECIFIED)	MM / INCH	EC NO: 835510	WAFER KK (5.08)/.200 CENTRES WITH POLARIZING WALL
4 PLACES	± / ±	DRWN: SS06 2018/10/08	PRODUCT CUSTOMER DRAWING
3 PLACES	± / ± 0.01	CHK'D: GGA 2025/09/25	DOCUMENT NUMBER: SDAE-2599M-NX; DOC TYPE: PSD; DOC PART: 001; REVISION: AG1
2 PLACES	± 0.25 / ± 0.014	APPR: GGA 2025/09/25	
1 PLACE	± 0.35 / ±	INITIAL REVISION:	
0 PLACES	± / ±	DRWN: MC 1988/02/23	
ANGULAR TOL	± °	APPR: JDENNEHY 2010/05/26	
DRAFT WHERE APPLICABLE MUST REMAIN WITHIN DIMENSIONS	THIRD ANGLE PROJECTION	DRAWING: B-SIZE	SERIES: 2599
	MATERIAL NUMBER: SEE CHART	CUSTOMER: GENERAL MARKET	SHEET NUMBER: 1 OF 2

DOCUMENT STATUS	P1	RELEASE DATE	2025/09/25 09:36:23

FORMAT: Eng-lega-master-tb-prod-B
REVISION: E1
DATE: 2021/05/01

No. OF CCTS.	AE-2599M-NA PART No.	AE-2599M-NA ENG. No.
2	10-08-5021	AE-2599M- 2 A
3	5031	3 A
4	5041	4 A
5	5051	5 A
6	5061	6 A
7	5071	7 A
8	5081	8 A
9	5091	9 A
10	5101	10 A
11	5111	11 A
12	10-08-5121	AE-2599M- 12 A

PLATING

0.00254/.000100 MIN MATTE TIN OVER
0.00127/.000050 MIN NICKEL

AE-2599M-NA -*			
PART No.	ENG. No.	PART No.	ENG. No.
38-00-0888	AE-2599M- 3 A-1	38-00-7480	AE-2599M-8 A-5
38-00-7089	3 A-2	---	8 A-1,5
38-00-7586	3 A-3	38-00-7097	8 A-3,5
---	---	38-00-7606	8 A-3,6
38-00-7090	4 A-2	38-00-7598	8 A-5,7
38-00-7092	4 A-3	38-00-7485	B A-5,8
38-00-4903	4 A-2,3	---	08 A-2
38-00-7483	5 A-2	---	8 A-3
---	---	38-00-7707	8 A-6
38-00-7093	5 A-3	30-00-8277	8A-7
---	---	38-00-7609	9 A-2
38-00-7487	5 A-5	38-00-7084	9 A-3
38-00-7584	6 A-2	38-00-7585	9 A-4
38-00-7094	6 A-3	---	9 A-4,7
38-00-7095	6 A-4	38-00-7098	9 A-5
38-00-7096	6 A-5	38-00-7599	9 A-6
---	---	38-00-7670	9 A-7
---	---	38-00-7484	10 A-3
38-00-1208	7 A-2	38-00-4902	10 A-4
38-00-7608	7 A-2,5	38-00-4905	10 A-6
38-00-7481	7 A-3	46999-0806	10 A-5,8
38-00-0887	7 A-4	38-00-7099	11 A-5
38-00-7595	7 A-5	---	---
38-00-7596	AE -2599M-7 A-6	---	---
---	---	38-00-4904	12 A-8
---	---	38-00-4901	AC 2599M -12 A-9

0.00254/.000100 MIN MATTE TIN OVER 0.00127/.000050 NICKEL

THIS DRAWING CONTAINS INFORMATION THAT IS PROPRIETARY TO MOLEX ELECTRONIC TECHNOLOGIES, LLC AND SHOULD NOT BE USED WITHOUT WRITTEN PERMISSION

DIMENSION UNITS	SCALE
mm/IN	1:1

GENERAL TOLERANCES (UNLESS SPECIFIED)

	MM	INCH
4 PLACES	±	±
3 PLACES	±	± 0.01
2 PLACES	± 0.25	± 0.014
1 PLACE	± 0.35	±
0 PLACES	±	±
ANGULAR TOL	± °	

DRAFT WHERE APPLICABLE MUST REMAIN WITHIN DIMENSIONS

CURRENT REV DESC: REMOVED OBSOLETED PART NUMBERS AS PER REQUEST.

EC NO: 835510
DRWN: SS06 2018/10/08
CHK'D: GGA 2025/09/25
APPR: GGA 2025/09/25

INITIAL REVISION:
DRWN: MC 1988/02/23
APPR: JDENNEHY 2010/05/26

THIRD ANGLE PROJECTION | DRAWING: B-SIZE | SERIES: 2599

molex

WAFER KK
(5.08)/.200 CENTRES WITH POLARIZING WALL

PRODUCT CUSTOMER DRAWING

DOCUMENT NUMBER	DOC TYPE	DOC PART	REVISION
SDAE-2599M-NX	PSD	001	AG1

MATERIAL NUMBER	CUSTOMER	SHEET NUMBER
SEE CHART	GENERAL MARKET	2 OF 2

DOCUMENT STATUS	P1	RELEASE DATE	2025/09/25 09:36:23

FORMAT: Eng-lega-master-tb-prod-B
REVISION: E1
DATE: 2021/05/01