GP8401
PAC (PWM to Analog Converter)
Dual 0%-100% PWM to 0-5V/0-10V

特性

- GP8401将2路0%-100%占空比的PWM信号输入，线性转换成0-5V或者0-10V的两路模拟电压输出。
- 输入信号范围0%-100%
- 输入PWM信号的频率范围: 50Hz to 50KHz（小于50Hz请联系先积）
- 输入PWM信号高电平：2.7V-5.5V
- 输出电压误差：< 0.5% （两点校准可得0.1 %）
- 输出电压线性度误差：0.1% TPY
- 输出短路保护，输出脚与地短路时芯片进入保护模式停止输出。
- 电源电压：9V - 36V
- 功耗：<4mA
- 启动时间：<2ms
- 工作温度：-40°C to 85°C

描述

GP8401是一个PWM信号转模拟信号转换器，相当于一个PWM信号输入，模拟信号输出的DAC。此芯片可以将占空比为0%到100%的两路PWM信号线性转换成0-5V或者0-10V的两路模拟电压，并且输出电压精度小于0.5%。校正电压点默认10.05V。

应用

- 通用信号转换
- 马达调速、LED调光
- 逆变器、电源
- 传感器、工业模拟信号隔离

CAUTION: These devices are sensitive to electrostatic discharge; follow proper IC Handling Procedures.
Linearin and designs are registered trademarks of Linearin Technology Corporation.
© Copyright Linearin Technology Corporation. All Rights Reserved.
All other trademarks mentioned are the property of their respective owners.

1. 管脚定义

管脚名称	管脚功能
PWM0	第一路，输入PWM信号
PWM1	第二路，输入PWM信号
VCC	电源
GND	地
V5V	内部LDO，5V输出，必须外接大于1uF电容。
NC	浮空
SEL	输出电压VOUT幅度选择，接地：0-5V；接V5V：0-10V
VOUT0	第一路模拟电压输出，必须外接一个0.1uF电容
VOUT1	第二路模拟电压输出，必须外接一个0.1uF电容

表-A 管脚分布

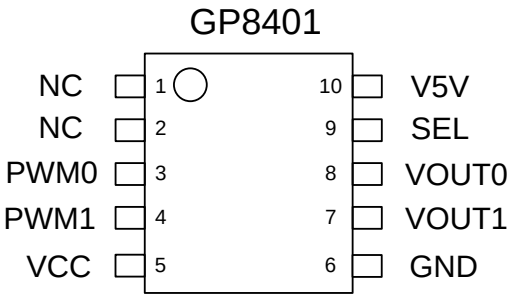

2. 绝对最大额定参数

工业操作温度	-40 ℃ to 85 ℃
储存温度	-50 ℃ to 125 ℃
输入电压	-0.3 V to VCC + 0.3 V
最大电压	36 V
ESD 保护	> 2000 V

** 超过“绝对最大额定值”中列出的参数值可能会造成永久性损坏设备。不保证器件在超出规范中列出的条件下操作。长时间暴露于极端条件下可能影响设备可靠性或功能。*

CAUTION: These devices are sensitive to electrostatic discharge; follow proper IC Handling Procedures.
Linearin and designs are registered trademarks of Linearin Technology Corporation.
© Copyright Linearin Technology Corporation. All Rights Reserved.
All other trademarks mentioned are the property of their respective owners.

3. 典型应用

3.1 基本功能（典型电路）

当芯片在板内电路中使用时可以适当增加电容和TVS对电路进行稳定和保护。

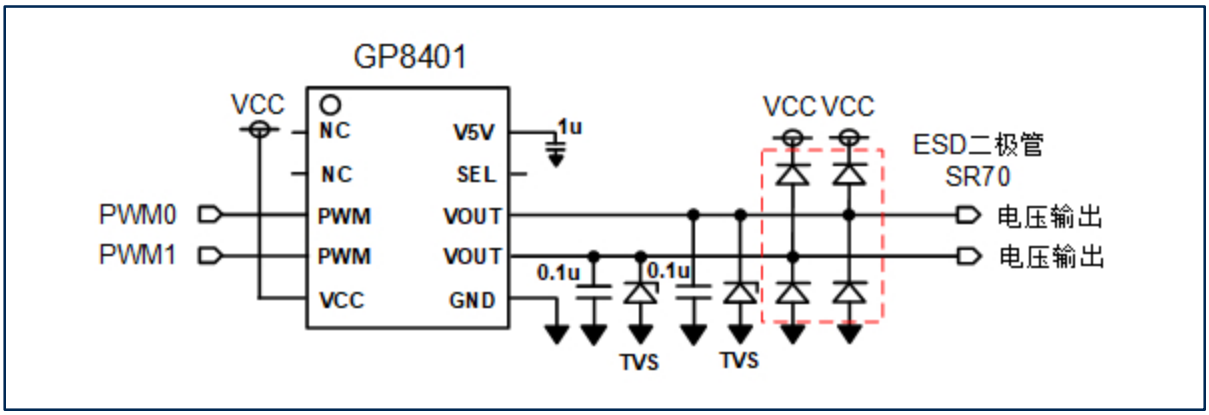

注意:

1、V5V上大于1uF电容为必须

*2、VOUT作为板级接口使用时，加12V单向TVS，反接、浪涌保护。*额外使用ESD二极管增强防护，例如SR70。

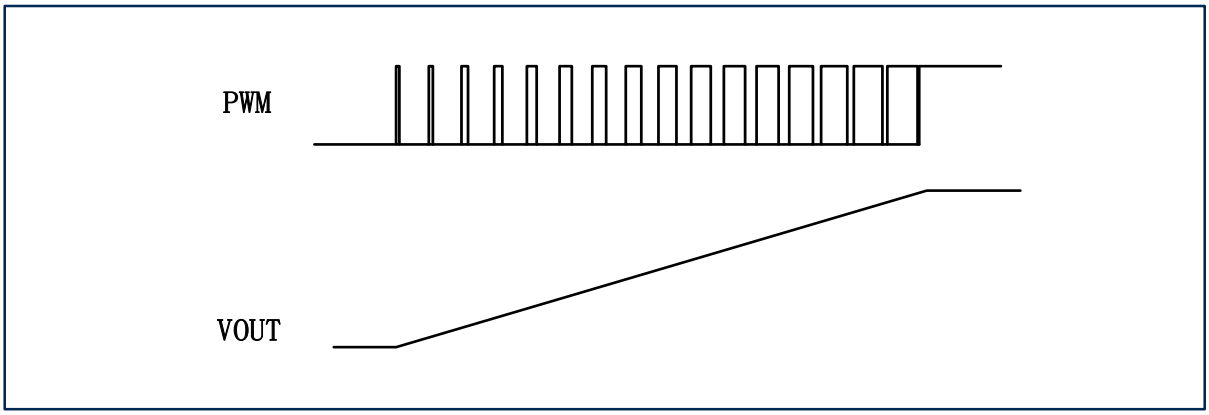

CAUTION: These devices are sensitive to electrostatic discharge; follow proper IC Handling Procedures.
Linearin and designs are registered trademarks of Linearin Technology Corporation.
© Copyright Linearin Technology Corporation. All Rights Reserved.
All other trademarks mentioned are the property of their respective owners.

4. 器件功能

GP8401是一款高性能双通道PAC芯片（PWM到模拟电压转换器），输入PWM信号的频率可以兼容50Hz到50KHz（小于50Hz请联系先积）。输出电压范围为0-5V或者0-10V，通过SEL信号选择，当SEL接地时，VOUT输出0-5V，当SEL接V5V时，VOUT输出0-10V。PWM信号的占空比为0％至100％，当选择0-5V输出时，VOUT=5V *D_{PWM}；当选择0-10V输出时，VOUT=10V *D_{PWM}。D_{PWM} 为输入信号PWM的占空比。

GP8401的默认输出电压精度为0.5%，需要0.2%精度可以咨询先积。

当GP8401芯片作为系统的接口芯片使用，需要在VOUT输出脚上对地接一个10uF电容和一个12V的单向TVS，保证芯片的热插拔、静电、反接等保护。

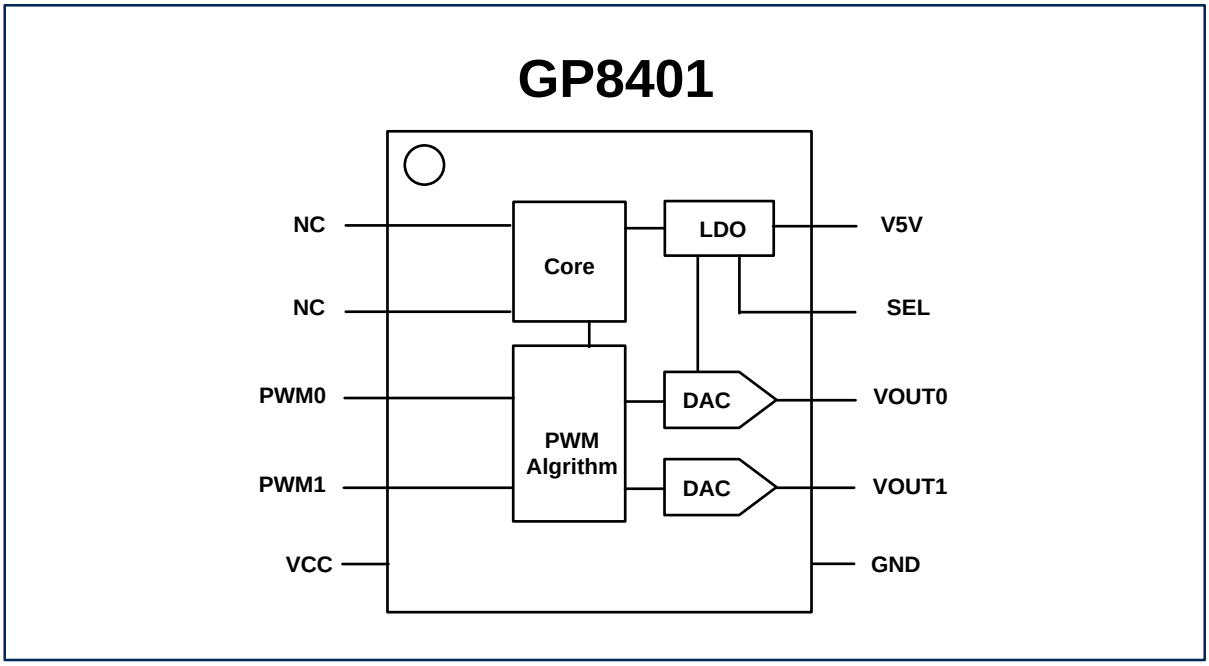

CAUTION: These devices are sensitive to electrostatic discharge; follow proper IC Handling Procedures.
Linearin and designs are registered trademarks of Linearin Technology Corporation.
© Copyright Linearin Technology Corporation. All Rights Reserved.
All other trademarks mentioned are the property of their respective owners.

5. 交流特性

符号	描述	最小	默认	最大	单位
f_{pwm} *1	PWM 信号频率	50		50K	Hz
D_{pwm}	PWM 信号的占空比	0		100	%
K_{CYCLE}	PWM识别周期数		1		PWM周期
T_{ACT} *2	输出电压响应时间		100	200	uS

**1：输入PWM信号的默认频率范围是50Hz-50KHz，如果输入PWM信号频率超过50KHz，输出电压精度降低，如果输入PWM信号频率低于50Hz，输出电压错误。如果需要低于50Hz的情况，需要请先积原厂定制参数。*

**2：输入PWM被识别后到输出电压稳定的时间。*

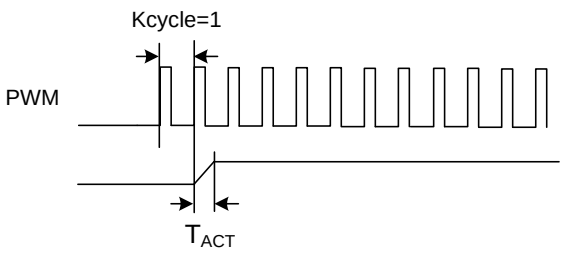

6. 直流特性

符号	描述	测试条件	最小	典型	最大	单位
VCC	电源电压		9	12	36	V
ICC	电源功耗	VCC @12V 空载		3	5	mA
VOUT *1	输出电压	SEL接地	0		5	V
		SEL接V5V	0		10	V
ΔVOUT	输出电压误差	与VOUT输出范围的比例			0.5	%
IOUT	VOUT输出电流	VOUT>0.5V VCC@12V	20			mA

**1：V5V上外挂负载后可能会轻微影响芯片精度。*

CAUTION: These devices are sensitive to electrostatic discharge; follow proper IC Handling Procedures.
Linearin and designs are registered trademarks of Linearin Technology Corporation.
© Copyright Linearin Technology Corporation. All Rights Reserved.
All other trademarks mentioned are the property of their respective owners.

7. 订购须知

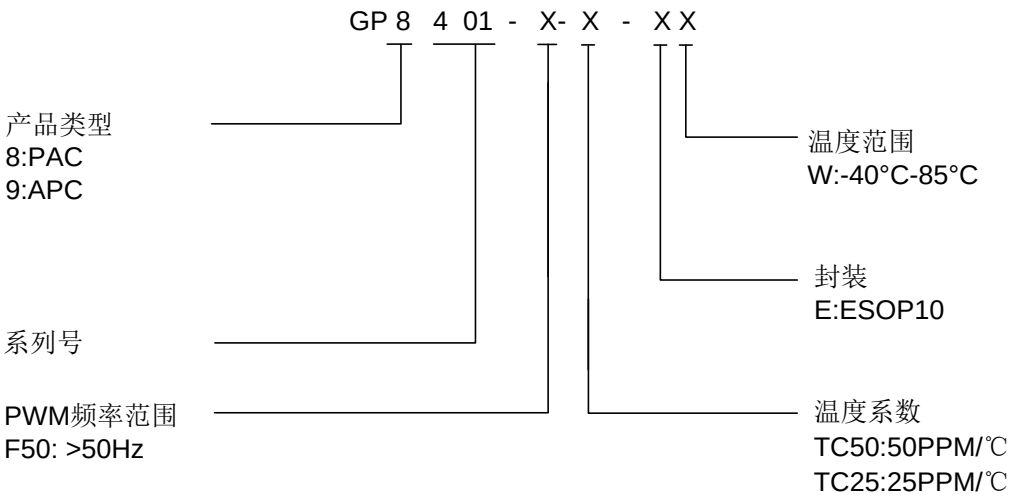

温度系数	精度	封装	工作温度	订购码
50PPM/℃	0.5%	ESOP10	-40℃-85℃	GP8401-TC50-EW

CAUTION: These devices are sensitive to electrostatic discharge; follow proper IC Handling Procedures.
Linearin and designs are registered trademarks of Linearin Technology Corporation.
© Copyright Linearin Technology Corporation. All Rights Reserved.
All other trademarks mentioned are the property of their respective owners.

8. 封装信息

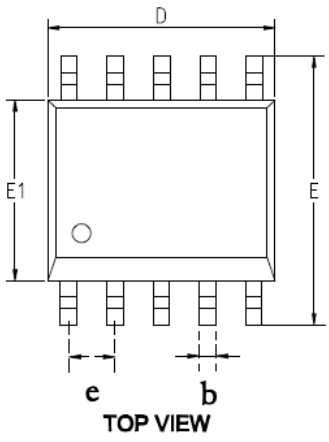

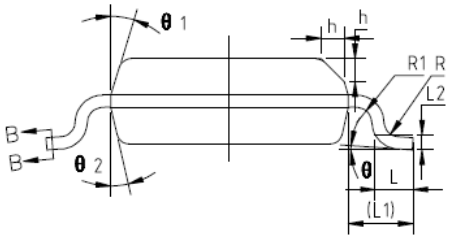

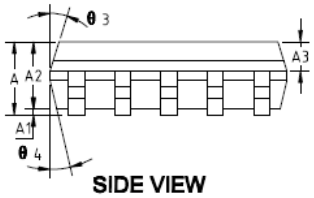

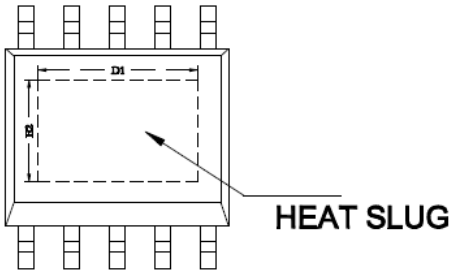

SYMBOL	MIN	NOM	MAX
A	1.35	1.50	1.65
A1	0.05	0.10	0.15
A2	1.35	1.40	1.50
A3	0.50	0.60	0.7
b	0.31	0.35	0.39
D	4.80	4.90	5.00
D1	3.20	3.30	3.40
e		1.0BSC	
E	5.80	6.00	6.20
E1	3.80	3.90	4.00
E2	2.00	2.10	2.20
L	0.45	0.60	0.80
L1		1.04REF	
L2		0.25BSC	
R	0.07	--	--
R1	0.07	--	--
h	0.30	0.40	0.50
θ	0°	--	8°
θ1	6°	8°	10°
θ2	6°	8°	10°
θ3	5°	7°	9°
θ4	5°	7°	9°

NOTES:
1.All DIMENSIONS REFER TO JEDEC STANDARD MO-137E
2.DIMENSION D DOES NOT INCLUDE MOLD FLASH
3.DIMENSION E1 DOSE NOT INCLUDE MOLD FLASH
4.FLASH OR PROTRUSION SHALL NOT EXCEED 0.25mm PER SIDE.

CAUTION: These devices are sensitive to electrostatic discharge; follow proper IC Handling Procedures.
Linearin and designs are registered trademarks of Linearin Technology Corporation.
© Copyright Linearin Technology Corporation. All Rights Reserved.
All other trademarks mentioned are the property of their respective owners.