LS0504EDD12

5.5V 4A Low-Ron Power Distribution Load Switch

RoHS Pb



Description

The LS0504EDD12 is a compact, low R_{ON} load switch with controlled slew rate. The device operates over an input voltage range of 1.8V to 5.5V and can support maximum continuous current of 4A.

The controlled output slew rate greatly reduces inrush current at start-up when charging large bulk load capacitances, thereby minimizes input supply voltage droop. LS0504E comes with built-in full protections against over current, over voltage and over temperature. It provides an accurate enable threshold which allows users to program input under-voltage lockout (UVLO) threshold through external resistor divider network. It has built-in 8Ω resistor for quick output discharge at disable.

Pinout Designation

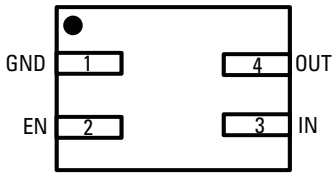

Features

- Wide Input Range from 1.8V to 5.5V
- Low R_{ON} at 26mΩ
- Up to 4A continuous current
- Built-in Over-Voltage, Over-Current and Over Temperature Fault Protections
- 250µs internal Soft-start for 5V output
- Accurate 1.2V Enable Threshold
- Quick Output Discharge in Shutdown

Pin Description

Pin Name	Pin #	Description
GND	1	Ground pin.
EN	2	Enable pin. EN has accurate 1.20V ON threshold. Pull EN pin above ON threshold enables the LS0504E. Pull EN pin below 0.4V disables the LS0504EDD12.
IN	3	Input pin. Connect a 10µF or greater ceramic capacitor from IN to GND close to the IC
OUT	4	Output pin. Connect a 10µF or greater ceramic capacitor from OUT to GND close to the IC

Applications

- Solid-state Drives
- Wearable IOT Devices
- Portable Medical Equipment
- Portable Media Players
- Smartphones and Tablets

Functional Block Diagram

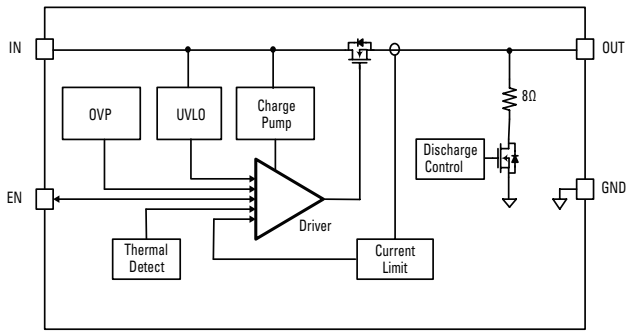

Typical Applications

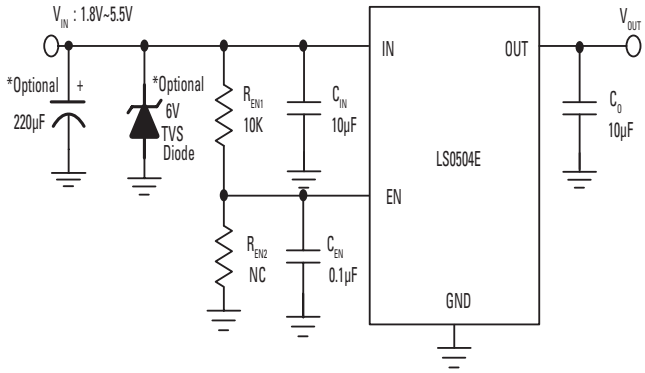

*USB Port Connection
When the input of LS0504E is connected to a USB port, recommend to add either a 6V Rating TVS diode or a 220µF Aluminum Cap to absorb input surge current during USB cable hot plug-in.

© 2022 Littelfuse, Inc.
Specifications are subject to change without notice.
Revised: FW.12/01/22

LS0504EDD12

5.5V 4A Low-Ron Power Distribution Load Switch

Absolute Maximum Rating (Reference to GND)

Symbol	Value	Units
All Pins	-0.3 to +6	V
IN to OUT	-0.3 to +6	V
ESD	Class 2	
Junction Temperature Range	-40 to +150	°C
Storage Temperature Range	-65 to +150	°C
Lead Temperature (Soldering 10s)	260	°C

* Notes: Stress exceeding those listed "Absolute Maximum Ratings" may damage the device.

Thermal information

Symbol	Value	Units
Maximum Power Dissipation (T_A=25°C)	0.5	W
Thermal Resistance (θ_{JA})	200	°C/W
Thermal Resistance (θ_{JC})	70	°C/W

Note1: Measured on JESD51-7, 4-Layer PCB.

Note 2: The maximum allowable power dissipation is a function of the maximum junction temperature T_{J_MAX}, the junction to ambient thermal resistance θ_{JA}, and the ambient temperature TA. The maximum allowable continuous power dissipation at any ambient temperature is calculated by $P_{D_MAX}=(T_{J_MAX}-T_A)/\theta_{JA}$. Exceeding the maximum allowable power dissipation will cause excessive die temperature, and the regulator will go into thermal shutdown. Internal thermal shutdown circuitry protects the device from permanent damage.

Recommend Operating Conditions

Symbol	Value	Units
Input Voltage (V_{IN})	+1.8 to 5.5	V
Junction Temperature Range	<135	°C

* Notes: The device is not guaranteed to function outside of the recommended operating conditions.

Electrical Characteristics (T_A = +25°C, V_{IN}=5V, V_{EN}=2V, unless otherwise specified)

Parameter	Test Conditions	Min	TYP	Max	Unit
Input-Supply Voltage Range		1.8		5.5	V
Shutdown Current	V_{EN}=0V		0.01	1	μA
Quiescent Supply Current	V_{EN}=2V, I_{LOAD}=0mA		35	50	μA
Input Under-Voltage Lockout Threshold Rising	V_{IN} ramp up		1.65		V
Input Under-Voltage Lockout Threshold Hysteresis	V_{IN} ramp down		0.15		V
Input Over-voltage Protection Rising Threshold	V_{IN} ramp up		6.3		V
Input Over-voltage Protection Hysteresis	V_{IN} ramp down		0.3		V
EN ON Threshold	EN Rising	1.14	1.20	1.26	V
EN ON Threshold Hysteresis	EN Falling		0.1		V
EN OFF Threshold	Shutdown current <1μA			0.4	V
Load Switch FET On Resistance R_{ON}			26		mΩ
Load Switch Current Limit			4.5		A
Output Discharge Resistance	V_{IN} =5V, V_{EN}=0V, V_{OUT}=0.3V		8		Ω
Load Switch soft-start time	V_{IN} =5V, Iload=500mA		250		μs
Thermal Shutdown			140		˚C
Thermal Shutdown Hysteresis			45		˚C

© 2022 Littelfuse, Inc.
Specifications are subject to change without notice.
Revised: FW.12/01/22

LS0504EDD12

5.5V 4A Low-Ron Power Distribution Load Switch

R_{ON} vs. Output Current

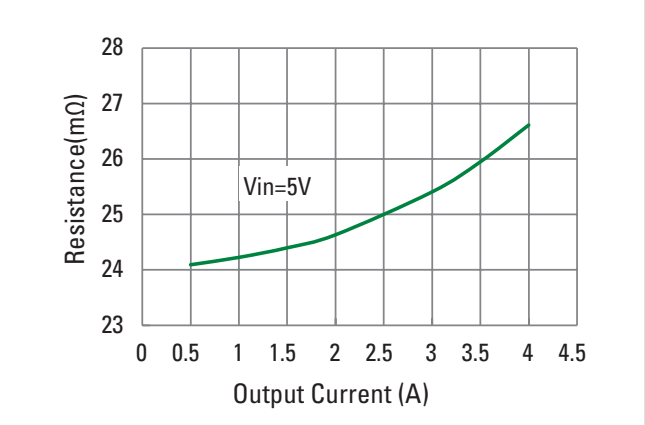

Quiescent Current vs. Input Voltage

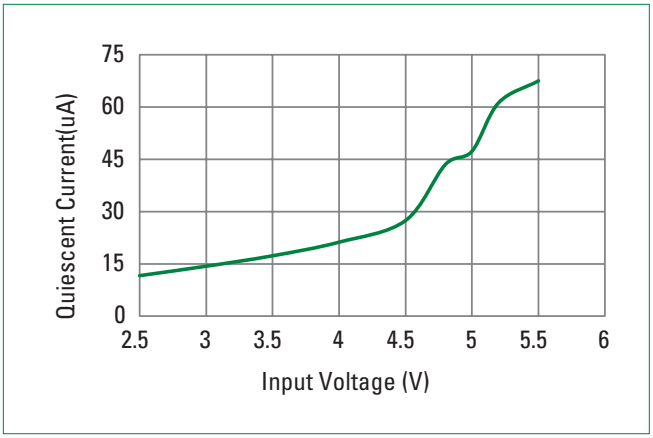

R_{ON} vs. Input Voltage

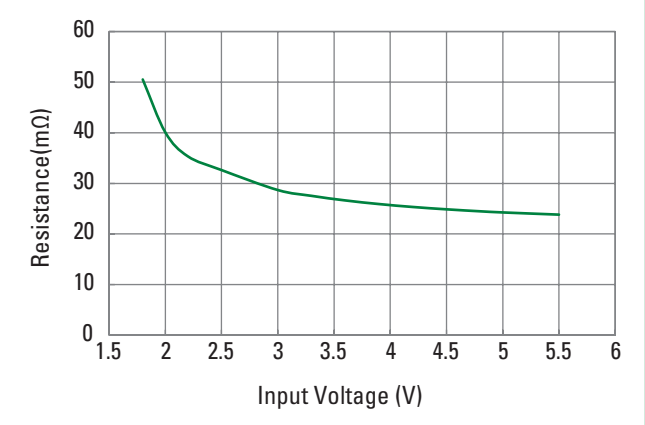

EN Power on (I_{OUT}=0A)

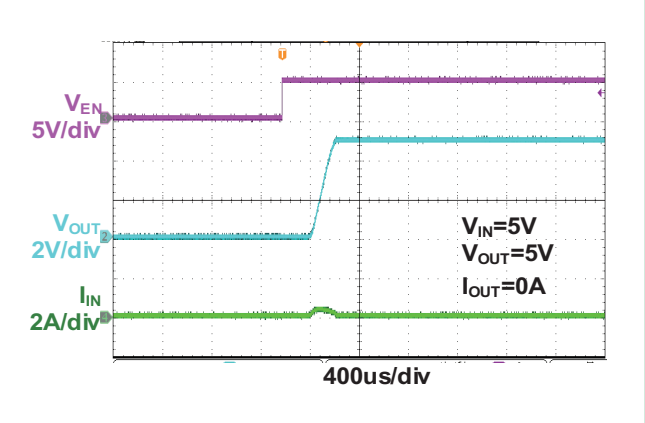

EN Power off (I_{OUT}=0A)

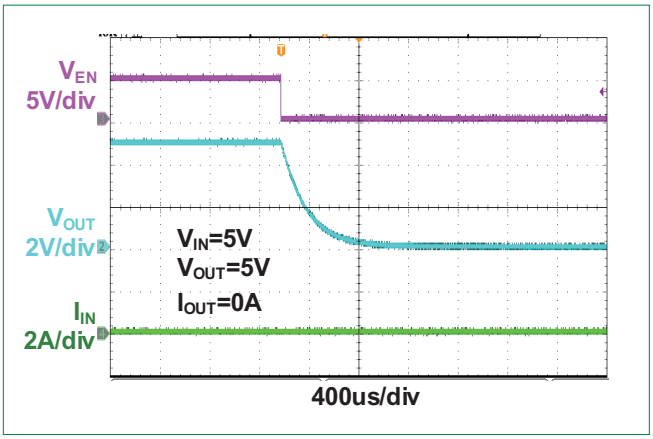

© 2022 Littelfuse, Inc.
Specifications are subject to change without notice.

LS0504EDD12

5.5V 4A Low-Ron Power Distribution Load Switch

Short Protection (I_{OUT}=0A~Short)

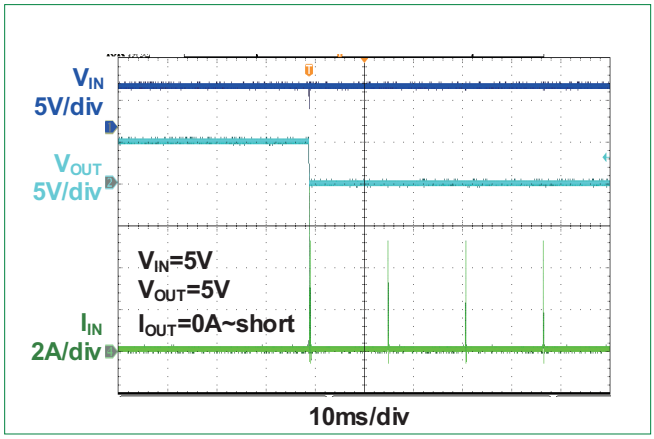

EN Power on (I_{OUT}=3A)

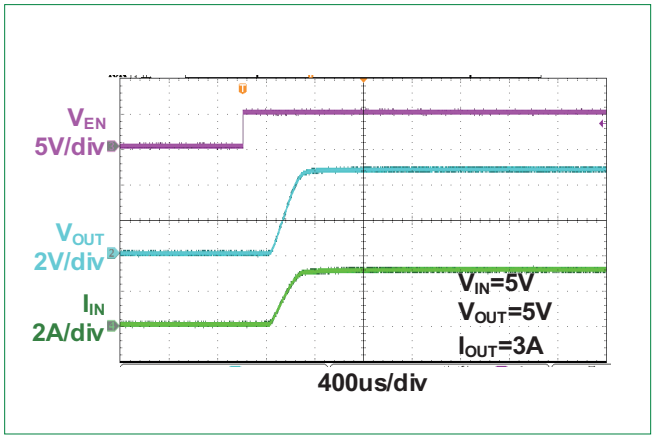

EN Power off (I_{OUT}=3A)

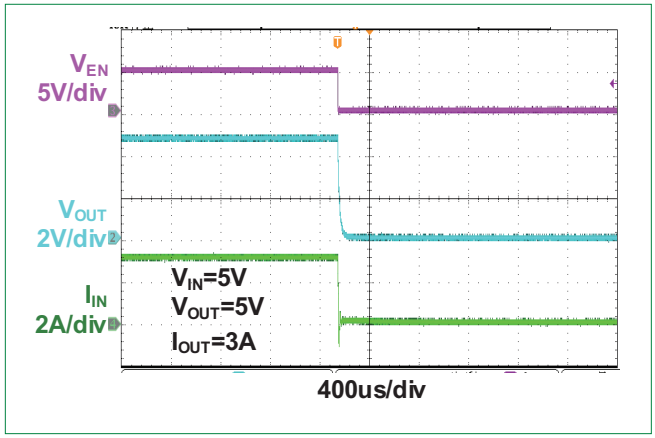

Short Protection (I_{OUT}=short~0A)

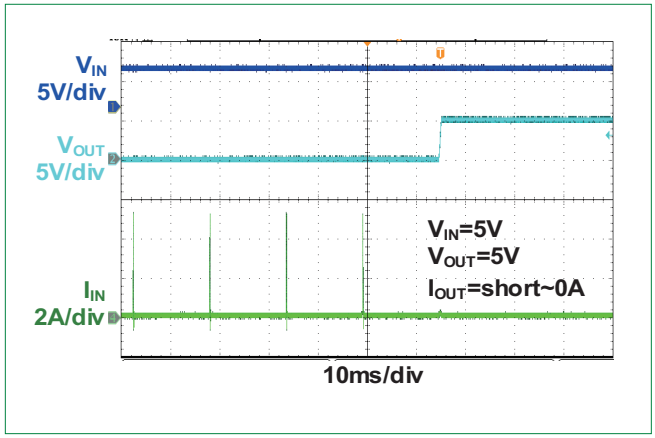

V_{IN} Power on (I_{OUT}=0A)

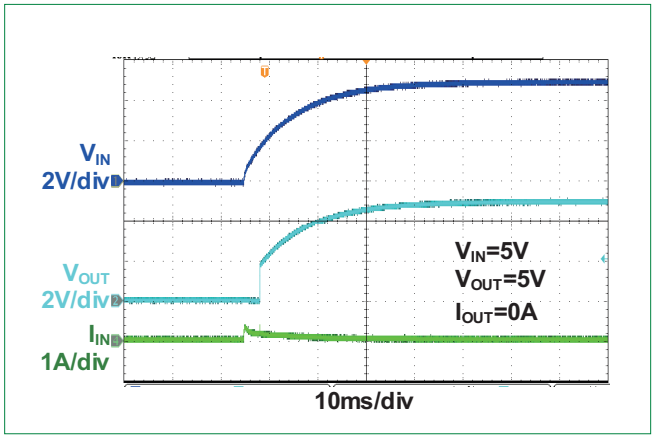

V_{IN} Power off (I_{OUT}=0A)

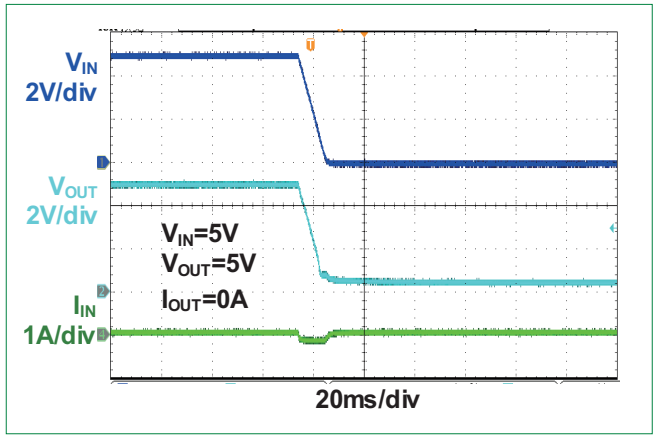

© 2022 Littelfuse, Inc.
Specifications are subject to change without notice.

LS0504EDD12

5.5V 4A Low-Ron Power Distribution Load Switch

V_{IN} Power on (I_{OUT}=3A)

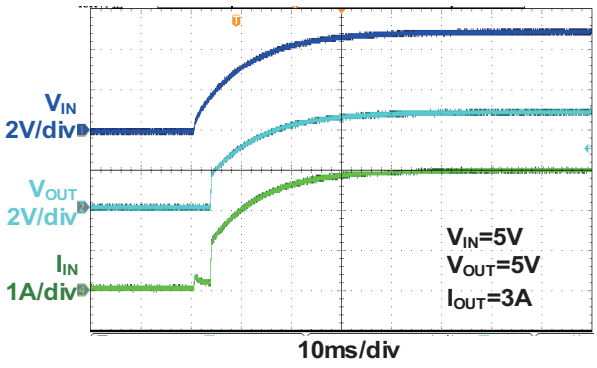

V_{IN} Power off (I_{OUT}=3A)

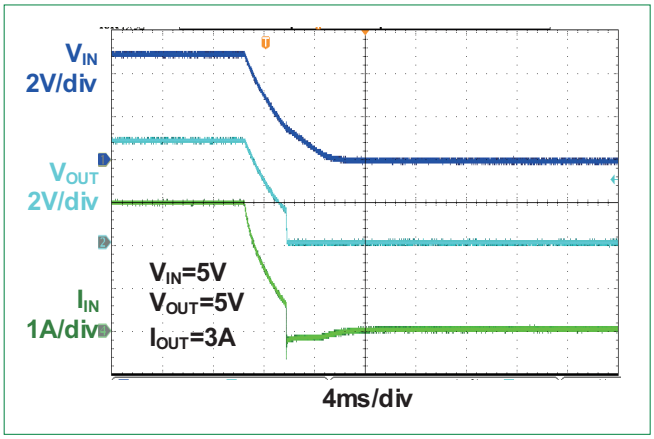

Output Rise Time vs. V_{IN} (I_{OUT}=0A)

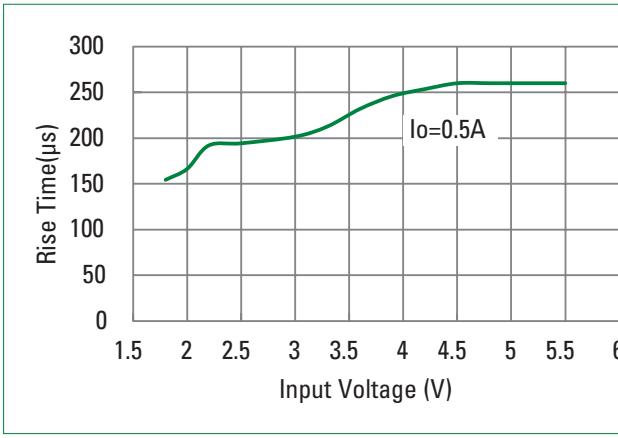

Output Rise Time vs. V_{IN} (I_{OUT}=3A)

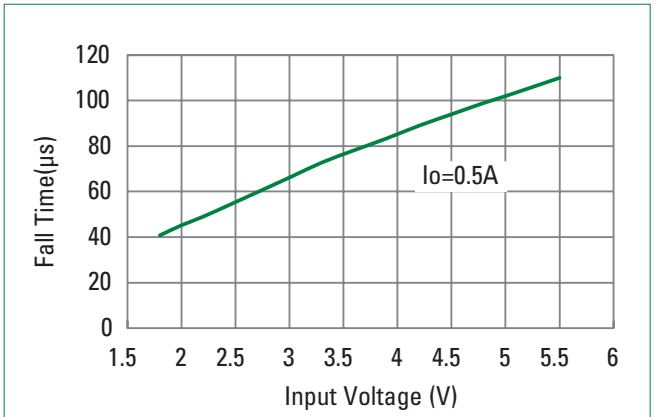

© 2022 Littelfuse, Inc.
Specifications are subject to change without notice.
Revised: FW.12/01/22

LS0504EDD12

5.5V 4A Low-Ron Power Distribution Load Switch

Theory of Operation

The LS0504EDD12 is 5.5V low R_{ON} current limited load switches in 4-pin DFN1.2mmx 1.6mm package. To minimize voltage drop for low voltage and high current rails, the device integrates an ultra-low R_{ON} N-channel MOSFET switch with 26mΩ. At enable, the LS0504E has internal soft-start which reduces inrush current and minimizes input power supply droop. When disabled, the device automatically discharges output voltage through an internal 8 Ω resistor. The LS0504EDD12 comes with built-in over current, over voltage and over temperature fault protection. When over current condition is detected, the LS0504EDD12 enters hiccup mode to minimize power dissipations. In hiccup mode, the power MOSFET is turned off to disconnect the load from input supply for a pre-determined period of time before it automatically re-tries to start up again with soft-start. If the over load condition persists with high ambient temperature, LS0504EDD12 junction temperature could rise above +140 ˚C. which is the built-in over temperature protection threshold. In this case, the LS0504EDD12 will turn off the power switch and wait for the junction temperature to drop below +95˚C before it tries to automatically re-start.

Application Information

The LS0504EDD12 is a load switch that integrates an internal low Ron N-channel MOSFET to reduce power loss. It operates with wide input voltage range and provides comprehensive protections.

Input and Output Capacitor Selection

For stable operation, recommend to place a 10μF or higher ceramic type X5R or X7R bypass capacitor at the IN and OUT pins. When the input is connected to a USB port, either USB cable hot plug-in or output short circuit can cause large ringing on the input. The device internal circuitry could be damaged if the input ringing voltage exceeds the absolute maximum rating of 6V. For these applications, it's recommend to add a 220μF or greater Aluminum bypass capacitor or 6V rating Transient Voltage Suppressor (TVS) at the input to absorb large input surge current.

Enable

When input voltage is above the internal input under-voltage lockout threshold (typ.1.65V), the LS0504EDD12 can be enabled by pulling the EN pin to above 1.2V. The device is disabled if the EN pin is pulled below 1.1V. The enable/disable threshold for EN pin is accurately designed to be 1.2V and 1.1V respectively, so one can also use external resistor divider to program the external input under-voltage lockout level (above 1.65V). Pull EN pin below 0.4V to turn off all circuitry and get <1μA shutdown current.

Soft-Start

The LS0504EDD12 has built-in 250μs soft start at enable. During the soft start period, VOUT will ramp up with a controlled slew rate to minimize input inrush current.

Thermal Considerations

For best performance, all traces should be as short as possible. To be most effective, the input and output capacitors should be placed close to the device to minimize the effects that parasitic trace inductances may have on normal and short-circuit operation. Using wide traces for V_{IN}, $V_{OUT,}$ and GND helps minimize the parasitic electrical effects along with minimizing the case to ambient thermal impedance. To ensure reliable operation, assume worst case junction temperature should not exceed +135°C. This restriction limits the power dissipation the regulator can handle in any given application. To ensure the junction temperature is within acceptable limits, calculate the maximum allowable dissipation, $P_{D(max)}$, and the actual dissipation, P_D which must be less than or equal to $P_{D(max)}$.

The maximum-power-dissipation limit is determined using the following equation:

$$P_{D(MAX)} = \frac{T_{JMAX} - T_A}{R_{\theta JA}} = \frac{135°C - 25°C}{200°C} = 0.55W$$

Where:

T_J max is the maximum allowable junction temperature.

$R_{\theta JA}$ is the thermal resistance junction-to-ambient for the package (see the Dissipation Ratings table).

T_A is the ambient temperature.

PCB Layout Recommendation

1. IN and OUT traces should be as short and wide as possible to accommodate for high current.

2. The IN pin should be bypassed to ground with low ESR ceramic bypass capacitors. The typical recommended bypass capacitance is 10μF ceramic with X5R or X7R dielectric. This capacitor should be placed as close to the device pins as possible.

3. The OUT pin should be bypassed to ground with low ESR ceramic bypass capacitors. The typical recommended bypass capacitance is one-tenth of the VIN bypass capacitor of X5R or X7R dielectric rating. This capacitor should be placed as close to the device pins as possible.

© 2022 Littelfuse, Inc.
Specifications are subject to change without notice.
Revised: FW.12/01/22

LS0504EDD12

5.5V 4A Low-Ron Power Distribution Load Switch

Soldering Parameters

Average ramp up rate (Tsmin to T_P)		1~2°C/second, 3°C/ second max.
Preheat & Soak	**-Temperature Min ($T_{s(min)}$)**	150°C
	-Temperature Max ($T_{s(max)}$)	200°C
	-Time (min to max) (t_s)	60 – 120 secs
Time maintained above	**-Temperature(T_L)**	217°C
	-Time(t_L)	60~150 seconds
Peak Temperature (T_P)		See Classification Temp intable1
Time within 5°C of actual peak Temperature (t_p)		30 seconds max
Ramp-down Rate		6°C/second max
Time 25°C to peak Temperature (T_P)		8 minutes Max.

Note 1: Tolerance for peak profile Temperature(Tp) is defined as a supplier minimum and a user maximum.

Note 2:Tolerance for time at peak profile temperature (tp)is defined as a supplier minimum and a user maximum.

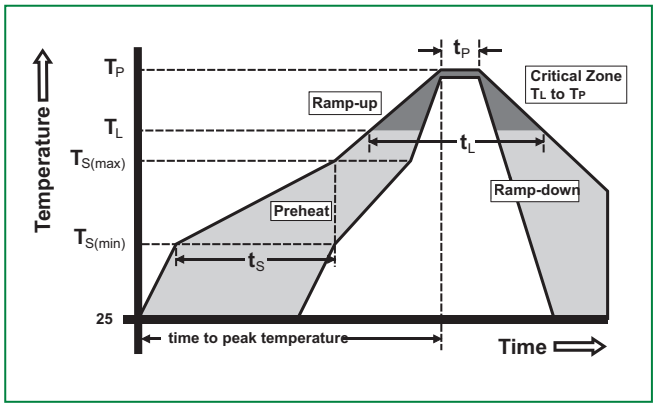

Table 1. Pb-freeProcess –Classification Temperatures (T_C)

Package Thickness	Volume mm³ <350	Volume mm³ 350-2000	Volume mm³ >2000
<1.6mm	260°C	260°C	260°C
1.6mm–2.5mm	260°C	250°C	245°C
>2.5mm	250°C	245°C	245°C

Note: For all temperature information, please refer to topside of the package, measured on the package body surface..

Part Numbering

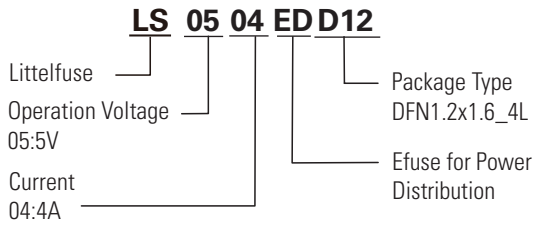

Part Marking

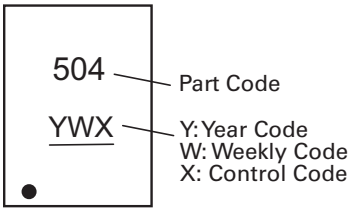

Ordering Information

Part Number	Package	Min. Order Qty.
LS0504EDD12	DFN1.2x1.6_4L	3000/Tape & Reel

© 2022 Littelfuse, Inc.
Specifications are subject to change without notice.
Revised: FW.12/01/22

LS0504EDD12

5.5V 4A Low-Ron Power Distribution Load Switch

Dimensions — DFN1.2x1.6_4L

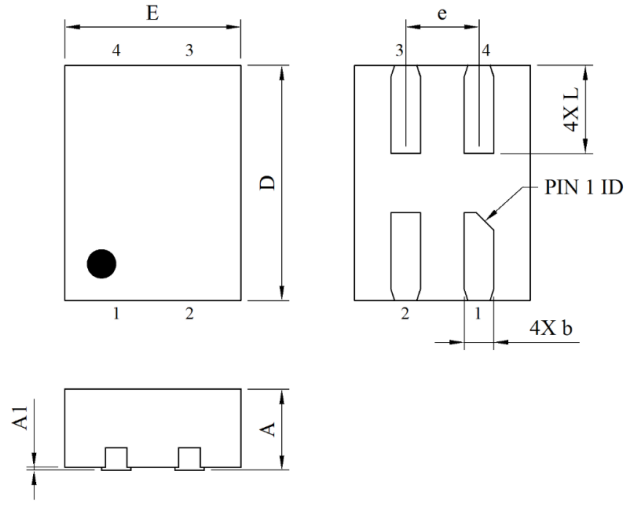

Dimension	Millimeters		Inches	
	Min	Max	Min	Max
A	0.50	0.60	0.020	0.024
A1	0.00	0.05	0.000	0.002
b	0.15	0.25	0.006	0.010
D	1.50	1.70	0.059	0.067
E	1.10	1.30	0.043	0.051
e	0.50 BSC.		0.020 BSC	
L	0.55	0.65	0.022	0.026

Carrier Tape & Reel Specification — DFN1.2x1.6_4L

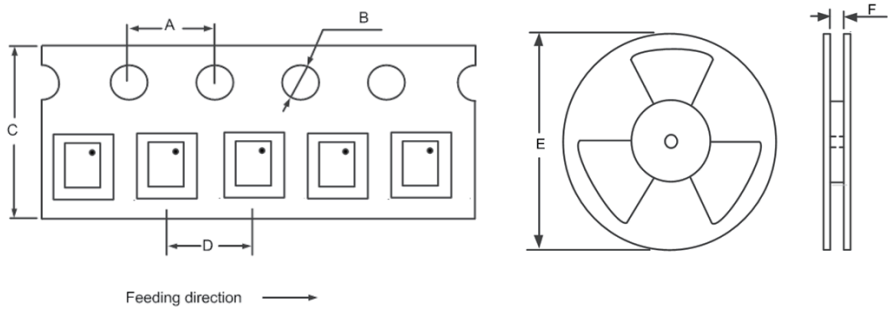

Symbol	Millimeters
A	4.0
B	1.5
C	8.0
D	4.0
E	7 inch
F	9.0

Product Disclaimer - Littelfuse products are not designed for, and shall not be used for, any purpose (including, without limitation, automotive, military, aerospace, medical, life-saving, life-sustaining or nuclear facility applications, devices intended for surgical implant into the body, or any other application in which the failure or lack of desired operation of the product may result in personal injury, death, or property damage) other than those expressly set forth in applicable Littelfuse product documentation. Warranties granted by Littelfuse shall be deemed void for products used for any purpose not expressly set forth in applicable Littelfuse documentation. Littelfuse shall not be liable for any claims or damages arising out of products used in applications not expressly intended by Littelfuse as set forth in applicable Littelfuse documentation. The sale and use of Littelfuse products is subject to Littelfuse Terms and Conditions of Sale, unless otherwise agreed by Littelfuse. "Littelfuse" includes Littelfuse, Inc., and all of its affiliate entities.

https://www.littelfuse.com/legal/disclaimers/product-disclaimer.aspx

Littelfuse

© 2022 Littelfuse, Inc.
Specifications are subject to change without notice.
Revised: FW.12/01/22