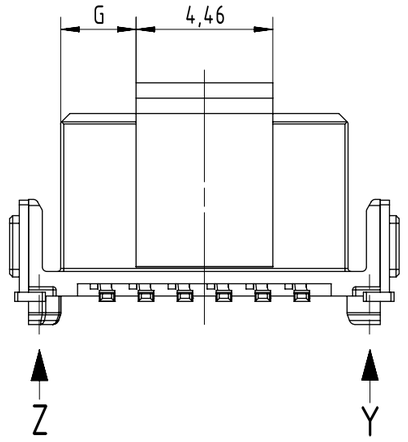

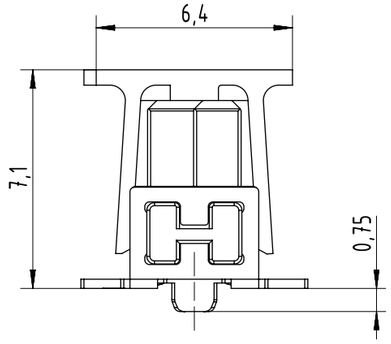

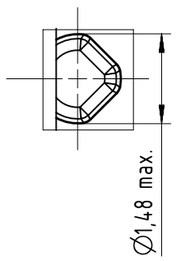

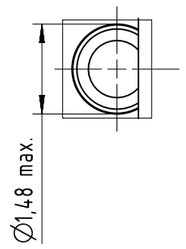

Part number	nb of cont.	A	B	C	D	E	G
15 21 006 x601 xxx	06	2,54	6,96	8,89	5,56	4,56	1,19
15 21 008 x601 xxx	08	3,81	8,23	10,16	6,83	5,83	1,19
15 21 010 x601 xxx	10	5,08	9,50	11,43	8,10	7,10	2,46

Packing	
tape & reel with 280 pcs per reel	000
samples	333

Performance level	
PL1 : > 500 mating cycles	2
PL2 : > 250 mating cycles	6
PLS4 : min. 0,06µm Au over 0,7+0,2µm PdNi	5

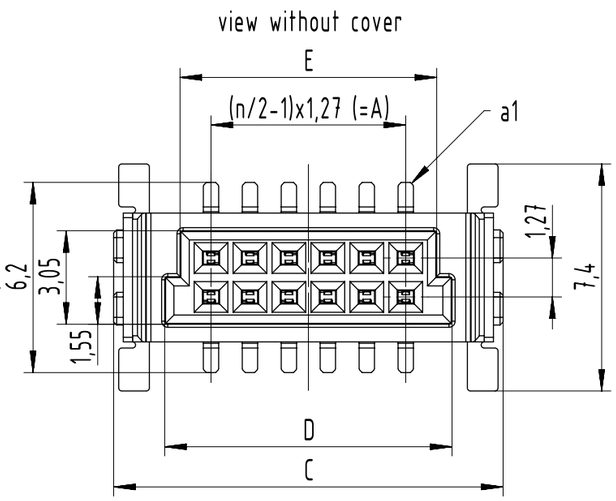

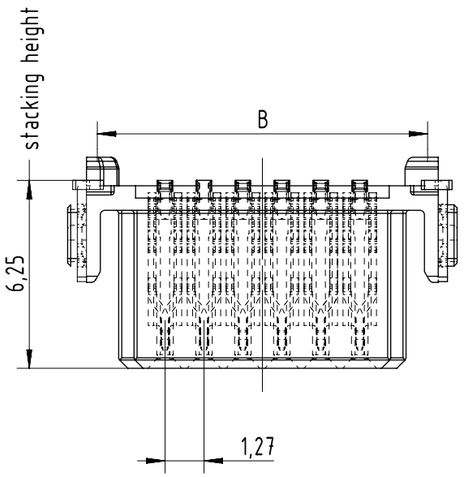

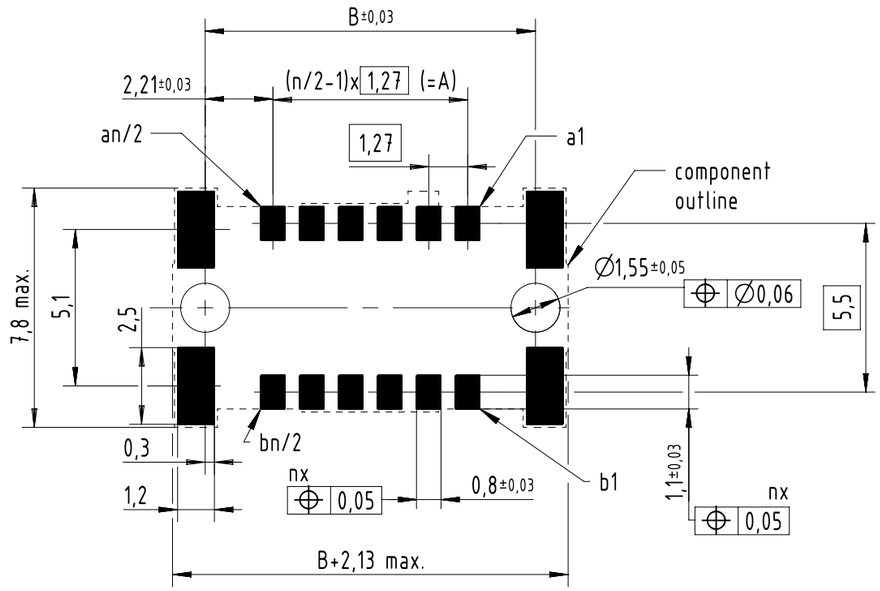

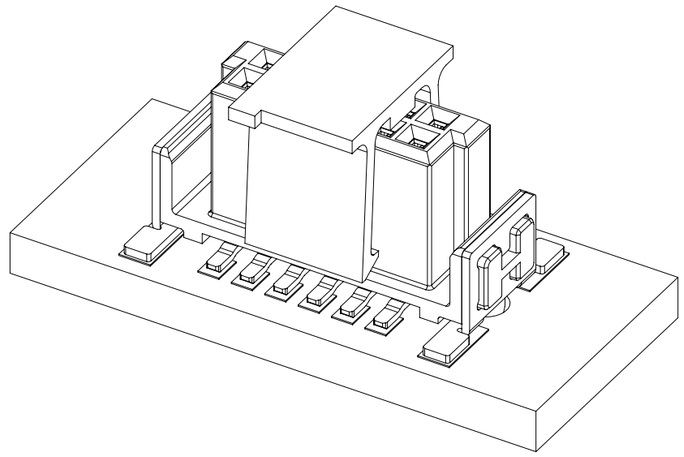

n=No. of contacts

Find further technical information on the drawing DS 1521 210 03 01

All Dimensions in mm Original Size DIN A3	Scale 5:1	Free size tol.		Ref.	
				Sub.	
All rights reserved	Created by zengd	Inspected by luok	Standardisation	Date 17-Oct-2024	State 40 - Released
Department EL PD	Title har-flex str. fe. 6.25mm, vacuum cover				Doc-Key / ECM-Nr. DS00191272
HARTING D-32339 Espelkamp	Type TB	Design Number DS00191272	SAP Mat. Number 1521XXXX601XXX	Rev. F	Page 1/2

A3

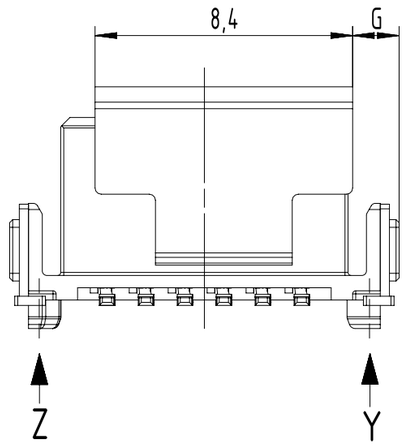

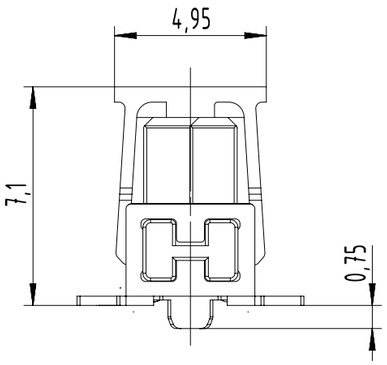

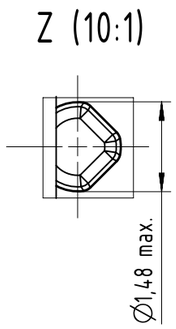

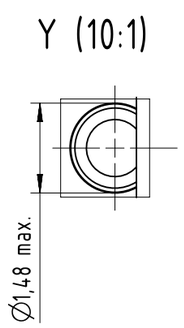

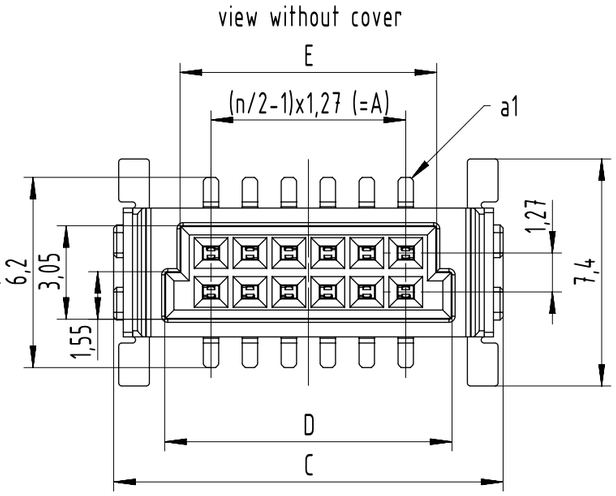

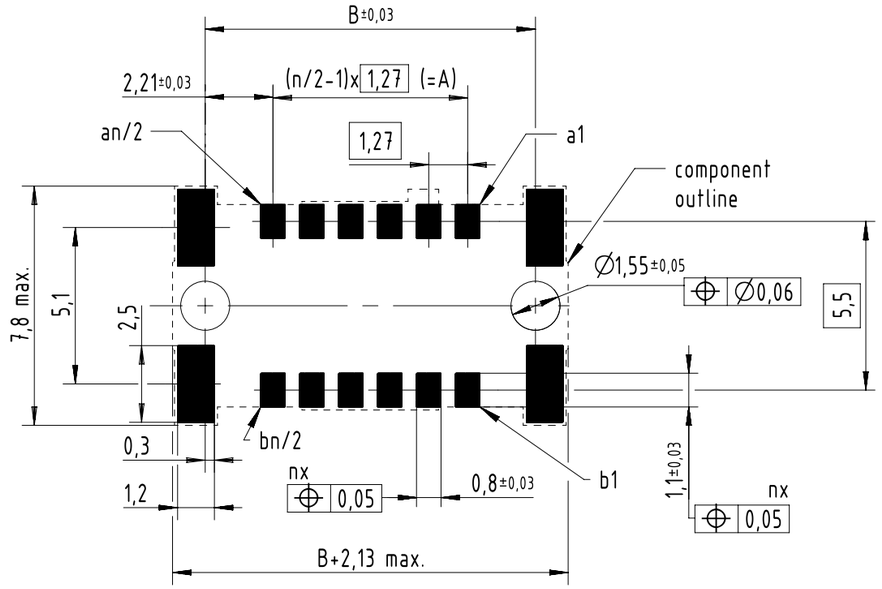

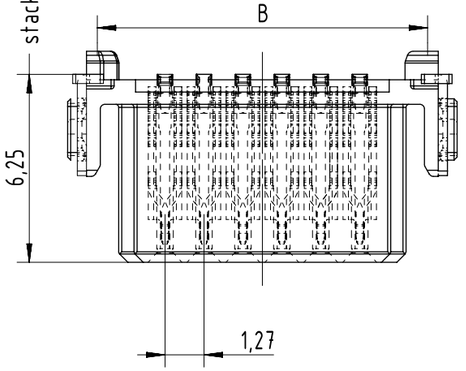

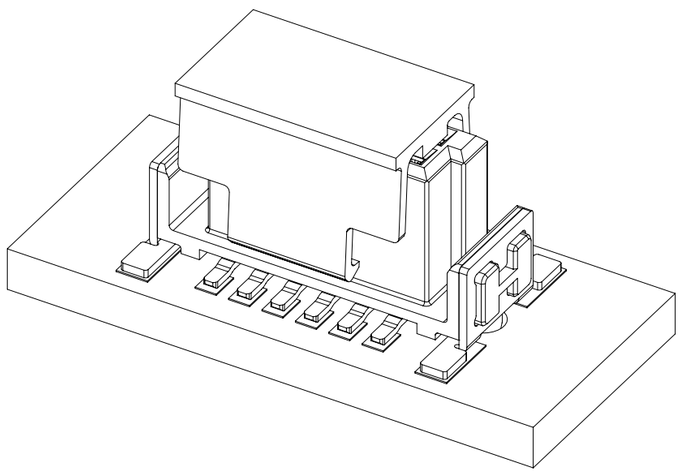

Part number	nb of cont.	A	B	C	D	E	G
15 21 012 x601 xxx	12	6,35	10,77	12,70	9,37	8,37	1,52
15 21 014 x601 xxx	14	7,62	12,04	13,97	10,64	9,64	2,79
15 21 016 x601 xxx	16	8,89	13,31	15,24	11,91	10,91	2,79
15 21 018 x601 xxx	18	10,16	14,58	16,51	13,18	12,18	4,06
15 21 020 x601 xxx	20	11,43	15,85	17,78	14,45	13,45	4,06
15 21 022 x601 xxx	22	12,70	17,12	19,05	15,72	14,72	5,33
15 21 024 x601 xxx	24	13,97	18,39	20,32	16,99	15,99	5,33
15 21 026 x601 xxx	26	15,24	19,66	21,59	18,26	17,26	6,6
15 21 028 x601 xxx	28	16,51	20,93	22,86	19,53	18,53	6,6
15 21 030 x601 xxx	30	17,78	22,20	24,13	20,80	19,80	7,87
15 21 032 x601 xxx	32	19,05	23,47	25,40	22,07	21,07	7,87
15 21 034 x601 xxx	34	20,32	24,74	26,67	23,34	22,34	9,14
15 21 036 x601 xxx	36	21,59	26,01	27,94	24,61	23,61	9,14
15 21 038 x601 xxx	38	22,86	27,28	29,21	25,88	24,88	10,41
15 21 040 x601 xxx	40	24,13	28,55	30,48	27,15	26,15	10,41
15 21 042 x601 xxx	42	25,40	29,82	31,75	28,42	27,42	11,68
15 21 044 x601 xxx	44	26,67	31,09	33,02	29,69	28,69	11,68
15 21 046 x601 xxx	46	27,94	32,36	34,29	30,96	29,96	12,95
15 21 048 x601 xxx	48	29,21	33,63	35,56	32,23	31,23	12,95
15 21 050 x601 xxx	50	30,48	34,90	36,83	33,50	32,50	14,22
15 21 052 x601 xxx	52	31,75	36,17	38,10	34,77	33,77	14,22
15 21 054 x601 xxx	54	33,02	37,44	39,37	36,04	35,04	15,49
15 21 056 x601 xxx	56	34,29	38,71	40,46	37,31	36,31	15,49
15 21 058 x601 xxx	58	35,56	39,98	41,91	38,58	37,58	16,76
15 21 060 x601 xxx	60	36,83	41,25	43,18	39,85	38,85	16,76
15 21 062 x601 xxx	62	38,10	42,52	44,45	41,12	40,12	18,03
15 21 064 x601 xxx	64	39,37	43,79	45,72	42,39	41,39	18,03
15 21 066 x601 xxx	66	40,64	45,06	46,99	43,66	42,66	19,3
15 21 068 x601 xxx	68	41,91	46,33	48,26	44,93	43,93	19,3
15 21 070 x601 xxx	70	43,18	47,60	49,53	46,20	45,20	20,57
15 21 072 x601 xxx	72	44,45	48,87	50,80	47,47	46,47	20,57
15 21 074 x601 xxx	74	45,72	50,14	52,07	48,74	47,74	21,84
15 21 076 x601 xxx	76	46,99	51,41	53,34	50,01	49,01	21,84
15 21 078 x601 xxx	78	48,26	52,68	54,61	51,28	50,28	23,11
15 21 080 x601 xxx	80	49,53	53,95	55,88	52,55	51,55	23,11
15 21 082 x601 xxx	82	50,80	55,22	57,15	53,82	52,82	24,38
15 21 084 x601 xxx	84	52,07	56,49	58,42	55,09	54,09	24,38
15 21 086 x601 xxx	86	53,34	57,76	59,69	56,36	55,36	25,65
15 21 088 x601 xxx	88	54,61	59,03	60,96	57,63	56,63	25,65
15 21 090 x601 xxx	90	55,88	60,30	62,23	58,90	57,90	26,92
15 21 092 x601 xxx	92	57,15	61,57	63,50	60,17	59,17	26,92
15 21 094 x601 xxx	94	58,42	62,84	64,77	61,44	60,44	28,19
15 21 096 x601 xxx	96	59,69	64,11	66,04	62,71	61,71	28,19
15 21 098 x601 xxx	98	60,96	65,38	67,31	63,98	62,98	29,46
15 21 100 x601 xxx	100	62,23	66,65	68,58	65,25	64,25	29,46

Packing	
tape & reel with 280 pcs per reel	000
samples	333

Performance level	
PL1 : > 500 mating cycles	2
PL2 : > 250 mating cycles	6
PLS4 : min. 0,06µm Au over 0,7+0,2µm PdNi	5

n=No. of contacts

Find further technical information on the drawing DS 1521 210 03 01

All Dimensions in mm
Original Size DIN A3

Scale 5:1

Free size tol.

Ref.

Sub.

All rights reserved

Department EL PD

HARTING
D-32339 Espelkamp

Created by	Inspected by	Standardisation	Date	State
zengd	luok		17-Oct-2024	40 - Released

Title: har-flex str. fe. 6.25mm, vacuum cover

Doc-Key / ECM-Nr.: DS00191272

Type	Design Number	SAP Mat. Number	Rev.	Page
TB	DS00191272	1521XXXX601XXX	F	2/2

A3