© 2021 TE Connectivity. All Rights Reserved.

REVISIONS					
P	LTR	DESCRIPTION	DATE	DWN	APVD
	1	PRELIMINARY	09JUL21	M.X	I.Y
	A	REVISED PER ECN-21-128714	08DEC21	M.X	I.Y
	A1	REVISED PER ECN-22-148402	17APR22	M.X	C.P
	A4	REVISED PER ECN-22-181304	26OCT22	A.Z	C.P

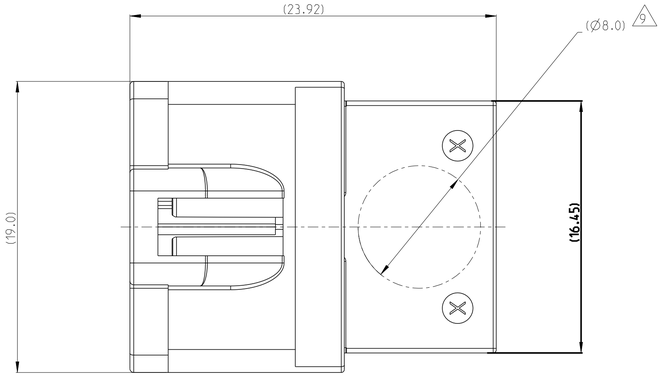

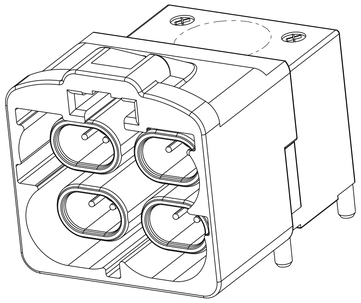

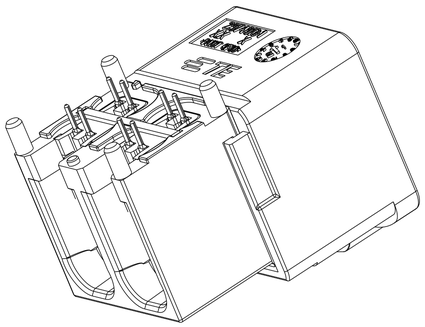

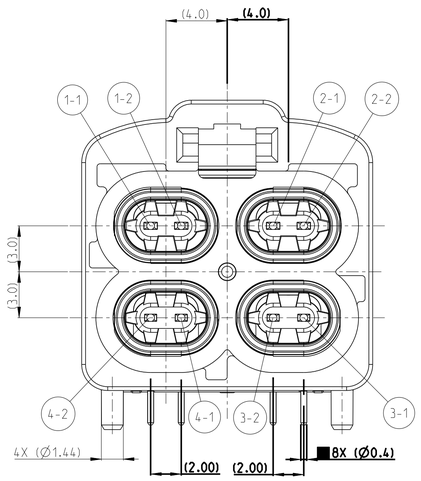

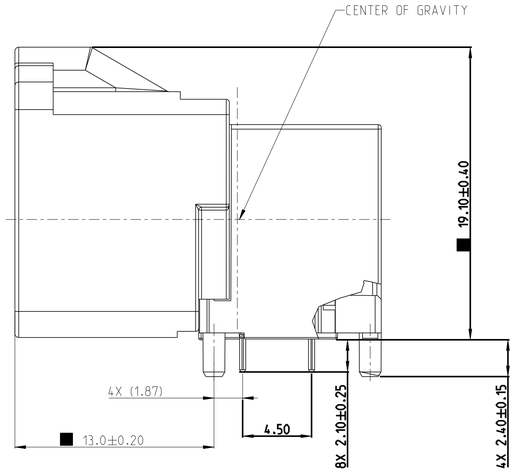

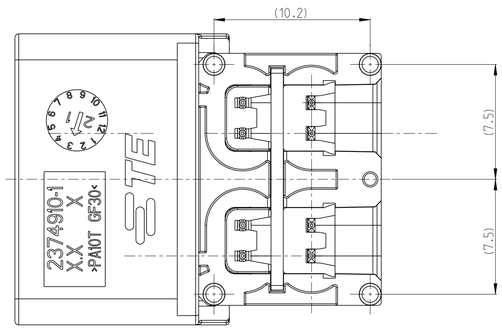

1. 2374900-1 AS SHOWN.

2 CONTACT: COPPER ALLOY
HOUSING: HIGH TEMP POLYAMIDE
DIELECTRIC: HIGH TEMP LCP
DIECAST: ZINC ALLOY.

3 PIN CONTACT - 0.38µm MIN GOLD ON INTERFACE END. 3.0µm MIN TIN ON SOLDER END. BOTH OVER 1.3µm MIN NICKEL.
OUTER SHELL - 3.0µm MIN TIN OVER 1.3µm MIN NICKEL.

4 MASS = 19.88g.

5. INTERFACE DESIGNED AROUND 100 Ohm DIFFERENTIAL SIGNAL.

6. THIS PRODUCT HAS NOT COMPLETED PRODUCT VERIFICATION TESTING.

7 PCB EDGE SHOULD NOT EXCEED THE FRONT SURFACE OF CONNECTOR HOUSING.

8 DATUM AND DIMENSION ESTABLISHED BY CUSTOMER .

9 VACUUM ABSORPTION AREA.

10 SYMBOL■ IS SIGNIFICANT CHARACTERISTIC.
SYMBOL⊠ IS MAJOR CHARACTERISTIC.

FINISH	HOUSING COLOR	KEYING CODE	PART NUMBER
3	WATER BLUE	Z	1-2374900-4
3	LIGHT GREEN	O	1-2374900-3
3	PASTEL ORANGE	M	1-2374900-2
3	YELLOW GREEN	L	1-2374900-1
3	CURRY	K	1-2374900-0
3	BEIGE	J	2374900-9
3	LIGHT PINK	H	2374900-8
3	PLATINUM GREY	G	2374900-7
3	NUT BROWN	F	2374900-6
3	MAY GREEN	E	2374900-5
3	CLARET VIOLET	D	2374900-4
3	LIGHT BLUE	C	2374900-3
3	PURE WHITE	B	2374900-2
3	JET BLACK	A	2374900-1

THIS DRAWING IS A CONTROLLED DOCUMENT.

DIMENSIONS: mm

TOLERANCES UNLESS OTHERWISE SPECIFIED
0 PLC ±1
1 PLC ±0.1
2 PLC ±0.05
3 PLC ±0.001
4 PLC ±0.0001
ANGLES ±1°

MATERIAL 2

FINISH SEE TABLE -

DWN A.ZHAO 26OCT2022
CHK D.ZHU 26OCT2022
APVD C.PAN 26OCT2022
PRODUCT SPEC -
APPLICATION SPEC TBD
WEIGHT 4

TE Connectivity

NAME GEMnet 4P 90DEG HEADER
-

SIZE	CAGE CODE	DRAWING NO	RESTRICTED TO
A1	00779	C-2374900	-

CUSTOMER DRAWING | SCALE 5:1 | SHEET 1 OF 3 | REV A4

© 2021 TE Connectivity. All Rights Reserved.

REVISIONS					
P	LTR	DESCRIPTION	DATE	DWN	APVD
		SEE SHEET 1			

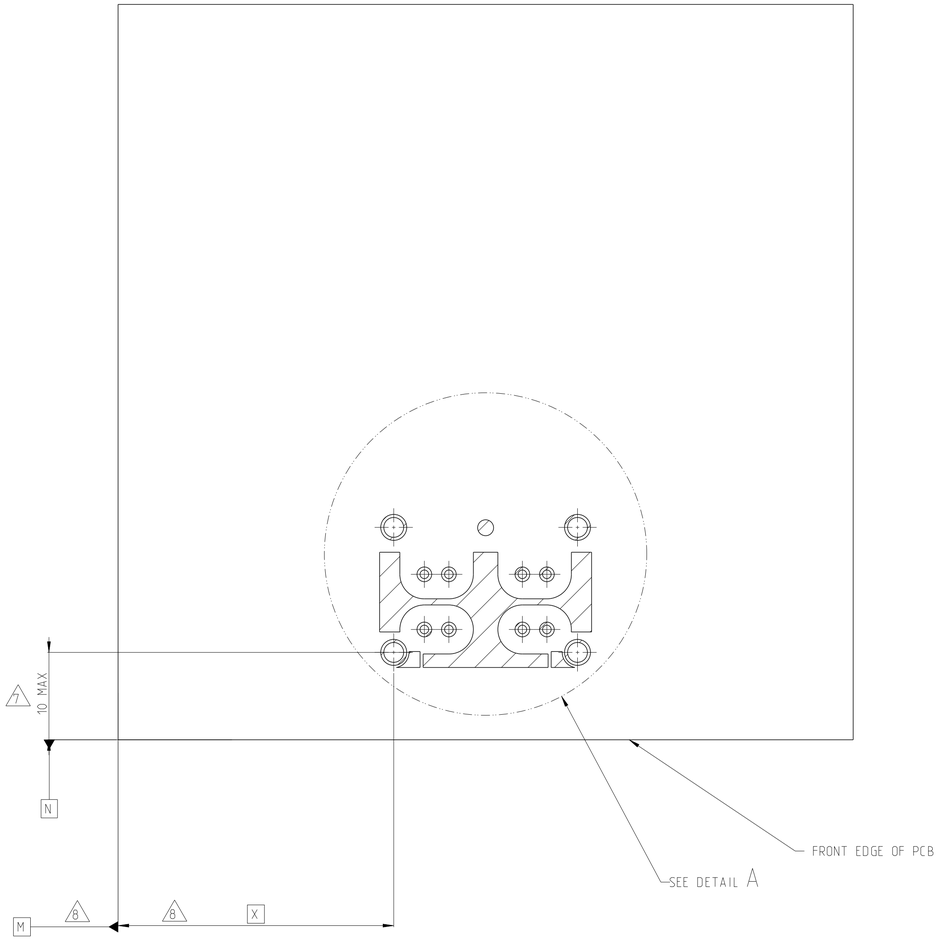

RECOMMENDED PDB FOOTPRINT

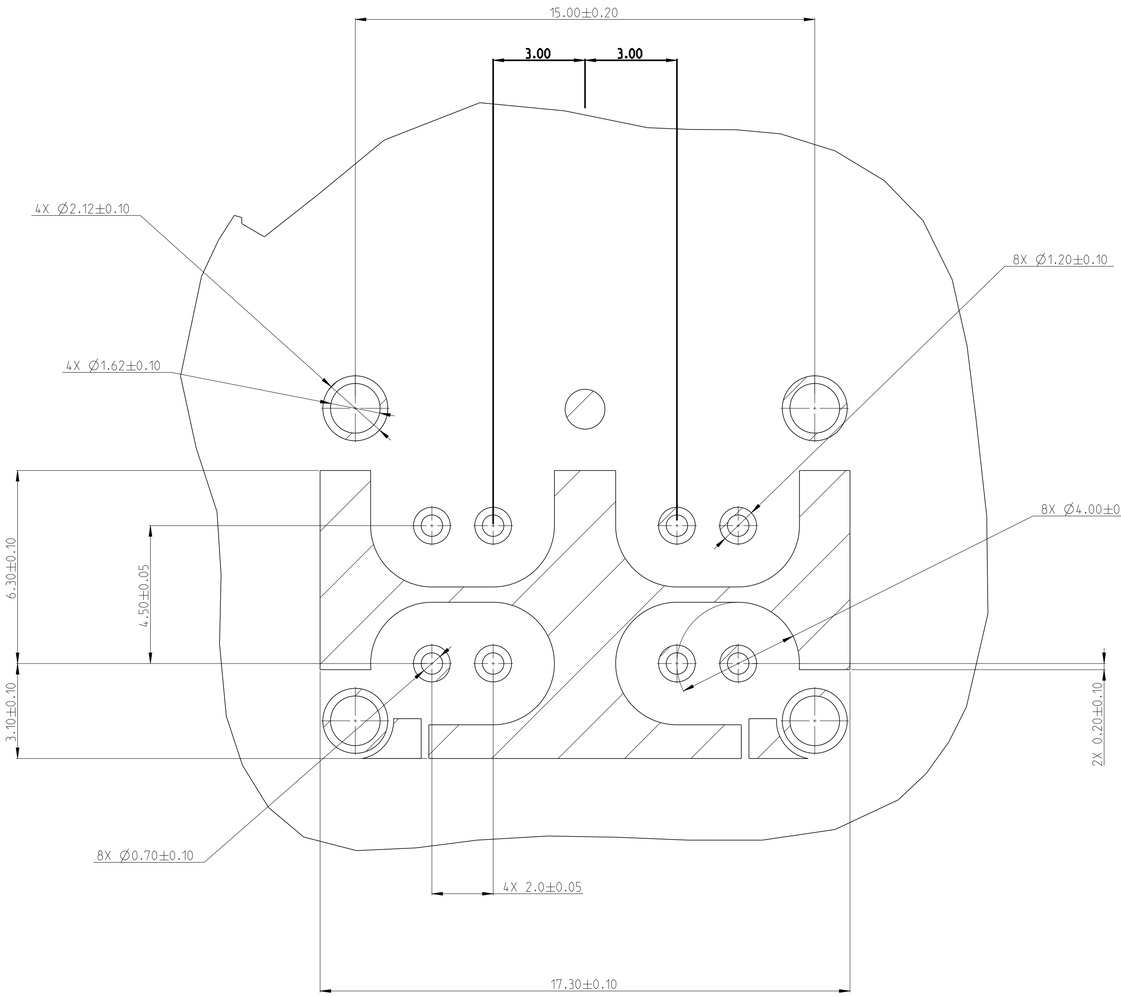

DETAIL A
SCALE 10:1

THIS DRAWING IS A CONTROLLED DOCUMENT.	DWN A.ZHAO 26OCT2022	TE Connectivity	
DIMENSIONS: mm	CHK D.ZHU 26OCT2022	NAME GEMnet 4P 90DEG HEADER	
TOLERANCES UNLESS OTHERWISE SPECIFIED: 0 PLC ±, 1 PLC ±0.1, 2 PLC ±0.05, 3 PLC ±0.001, 4 PLC ±0.0001, ANGLES ±	APVD C.PAN 26OCT2022	–	
	PRODUCT SPEC –	–	
	APPLICATION SPEC –	SIZE A1 | CAGE CODE 00779 | DRAWING NO C-2374900 | RESTRICTED TO –	
MATERIAL 2	WEIGHT –	SCALE 5:1 | SHEET 2 OF 3 | REV A4	
FINISH – –	CUSTOMER DRAWING		

© 2021 TE Connectivity. All Rights Reserved.

REVISIONS					
P	LTR	DESCRIPTION	DATE	DWN	APVD
		SEE SHEET 1			

KEYING CODE

CODE A

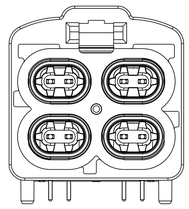

CODE G

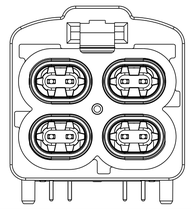

CODE B

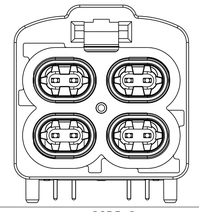

CODE H

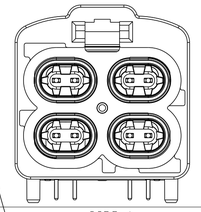

CODE C

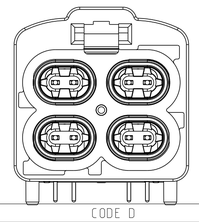

CODE J

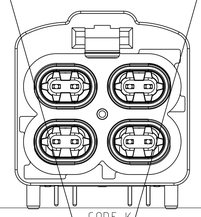

CODE D

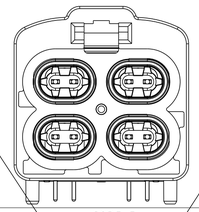

CODE K

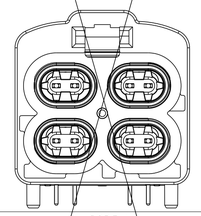

CODE E

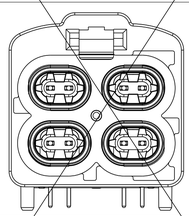

CODE L

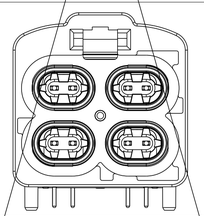

CODE F

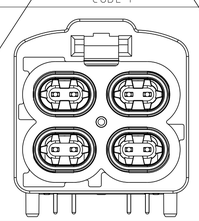

CODE M

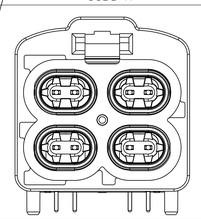

CODE Z

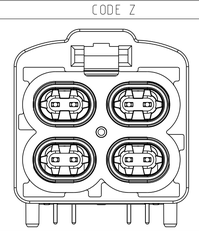

CODE O

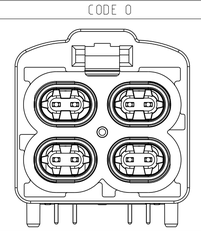

THIS DRAWING IS A CONTROLLED DOCUMENT.

DIMENSIONS: mm

TOLERANCES UNLESS OTHERWISE SPECIFIED:
0 PLC ±
1 PLC ±0.3
2 PLC ±0.05
3 PLC ±0.001
4 PLC ±0.0001
ANGLES ±

MATERIAL 2

FINISH SEE TABLE -

DWN	A.ZHAO	26OCT2022
CHK	D.ZHU	26OCT2022
APVD	C.PAN	26OCT2022

PRODUCT SPEC: TBD

APPLICATION SPEC: TBD

WEIGHT: 4

TE Connectivity

NAME: GEMnet 4P 90DEG HEADER
-

SIZE	CAGE CODE	DRAWING NO	RESTRICTED TO
A1	00779	C-2374900	-

CUSTOMER DRAWING

SCALE	SHEET	REV
3:1	3 OF 3	A4