MOSFET

-13.5A ,-60V ,105mΩ P-CHANNEL MOSFET

Features

- Low gate charge
- High Power and current handing capability
- Lead free product is acquired

Application

- High side switch for full bridge converter
- DC/DC converter for LCD display

View and Internal Schematic Diagram

TO-252-2L

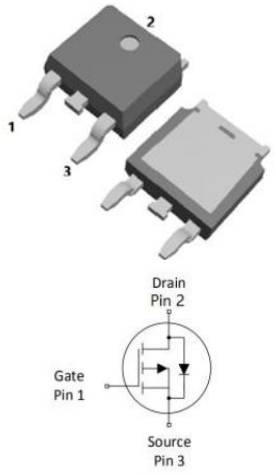

Parameter	Values	Unit
BV_{DSS}	-60	V
I_D	-13.5	A
R_{Dson}(max)	105	mΩ
$V_{GS(th)}$(Typ)	-1.8	V

Ordering Code	Marking	Package	Packaging
X105P060TLE2	X105P060TLE2	TO-252-2L	Tape and reel

Absolute Maximum Ratings(T_C=25℃,unless otherwise noted)

Parameter	Symbol	Values			Unit	Note/Test Conditions
		Min	Typ	Max		
Drain-Source Voltage	V_{DSS}	-	-	-60	V	-
Gate-Source Voltage	V_{GS}	-20	-	20	V	-
Continuous Drain Current(Note 1)	I_D	-	-	-13.5	A	T_C=25℃
		-	-	-9.4	A	T_C=100℃
Pulsed Drain Current(Note 2)	I_{DM}	-	-	-54	A	-
Single Pulse Avalanche Energy	E_{AS}	-	-	56	mJ	L=0.5mH,V_D=-40V, T_C=25℃
Maximum Power Dissipation	P_D	-	-	40.5	W	T_C=25℃
				20.3	W	T_C=100℃
Operating Junction and Storage Temperature Range	T_j,T_{STG}	-55	-	175	℃	-

Thermal Characteristics

Parameter	Symbol	Values			Unit	Note/Test Conditions
		Min	Typ	Max		
Thermal resistance , Junction to Case	$R_{th(J-c)}$	-	-	3.7	℃/W	-

Electrical Characteristics (T_j=25℃,unless otherwise noted)

Static characteristics

Parameter	Symbol	Values			Unit	Note/Test Conditions
		Min	Typ	Max		
Drain-Source Breakdown Voltage	BV_{DSS}	-60	-	-	V	V_{GS}=0V,I_D=-250μA
Zero Gate Voltage Drain Current	I_{DSS}	-	-	-1	μA	V_{DS}=-60V,V_{GS}=0V
Gate-Body Leakage Current,Forward	I_{GSSF}	-	-	100	nA	V_{GS}=20V,V_{DS}=0V
Gate-Body Leakage Current,Reverse	I_{GSSR}	-	-	-100	nA	V_{GS}=-20V,V_{DS}=0V
Gate-Source Threshold Voltage	$V_{GS(th)}$	-1	-	-2.5	V	V_{DS}=V_{GS},I_D=-250μA
Drain-Source On-State Resistance	$R_{DS(on)}$	-	81	105	mΩ	V_{GS}=-10V,I_D=-10A
		-	97	129	mΩ	V_{GS}=-4.5V,I_D=-8A
Forward Transconductance	g_{fs}	-	15	-	S	V_{DS}=-5V,I_D=-10A

Dynamic characteristics

Parameter	Symbol	Values			Unit	Note/Test Conditions
		Min	Typ	Max		
Input Capacitance	C_{iss}	-	1450	-	pF	V_{DS}=-30V,V_{GS}=0V,f=1.0MHZ
Output Capacitance	C_{oss}	-	48	-		
Reverse Transfer Capacitance	C_{rss}	-	35	-		
Turn-On Delay Time	$t_{d(on)}$	-	9.7	-	ns	V_{DD}=-30V,R_G=3Ω,V_{GS}=-10V,R_L=3Ω
Turn-On Rise Time	t_r	-	5.5	-		
Turn-Off Delay Time	$t_{d(off)}$	-	29	-		
Turn-Off Fall Time	t_f	-	6	-		

Gate charge characteristics

Parameter	Symbol	Values			Unit	Note/Test Conditions
		Min	Typ	Max		
Total Gate Charge	Q_g	-	23.7	-	nC	V_{DS}=-30V,I_D=-10A,V_{GS}=-10V
Gate-Source Charge	Q_{gs}	-	2.1	-		
Gate-Drain Charge	Q_{gd}	-	7.2	-		

Reverse diode

Parameter	Symbol	Values			Unit	Note/Test Conditions
		Min	Typ	Max		
Continuous Diode Forward Current	I_{SD}	-	-	-13.5	A	-
Diode Forward Voltage	V_{SD}	-	-	-1.2	V	I_S=-10A,V_{GS}=0V
Reverse Recovery Time	t_{rr}	-	34	-	ns	V_{GS}=0V,I_s=-10A,di/dt=-100A/μs
Reverse Recovery Charge	Q_{rr}	-	37	-	nC	

Notes

1. Computed continuous current assumes the condition of T_{j_Max} while the actual continuous current depends on the thermal & electro-mechanical application board design.

2.This single-pulse measurement was taken under T_{j_Max} = 150°C.

RATING AND CHARACTERISTIC CURVES

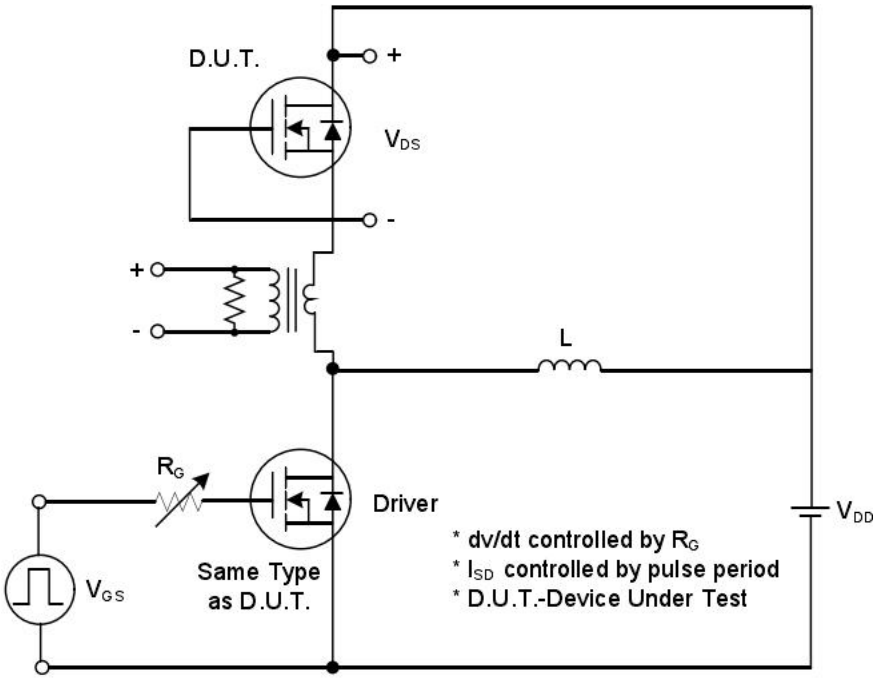

Peak Diode Recovery dv/dt Test Circuit

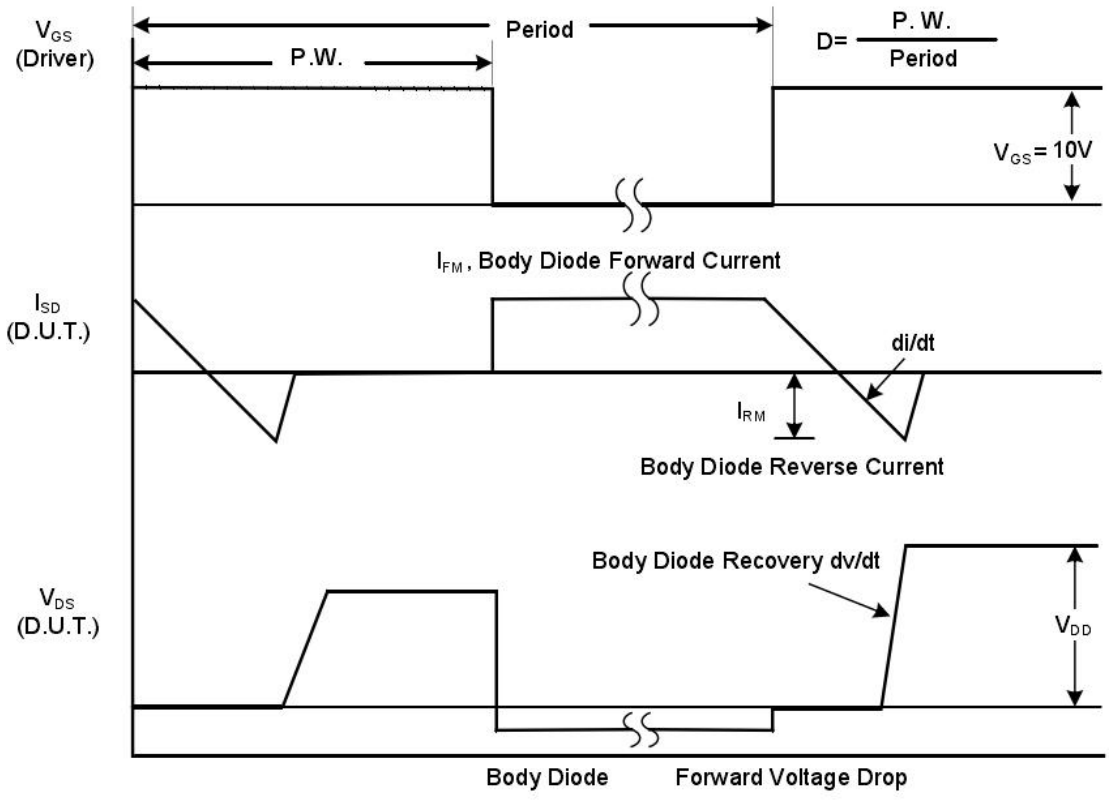

Peak Diode Recovery dv/dt Waveforms

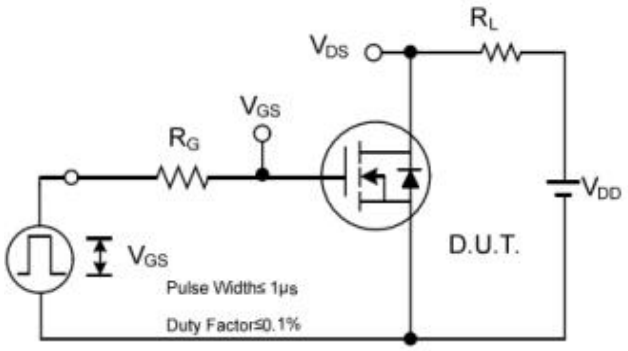

Switching Test Circuit

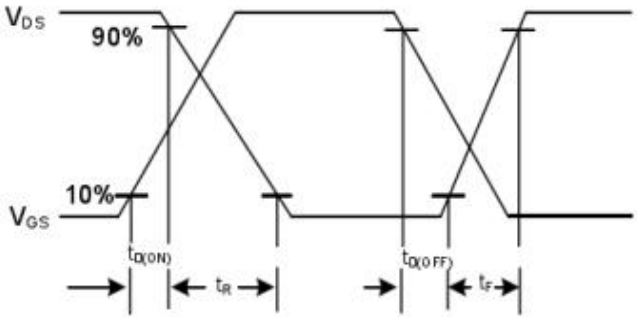

Switching Waveforms

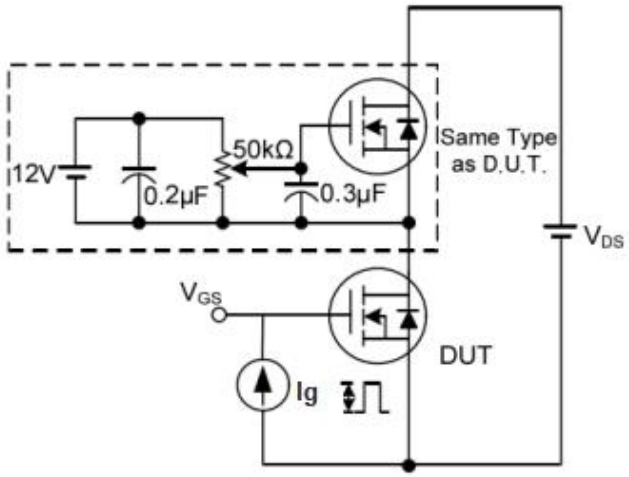

Gate Charge Test Circuit

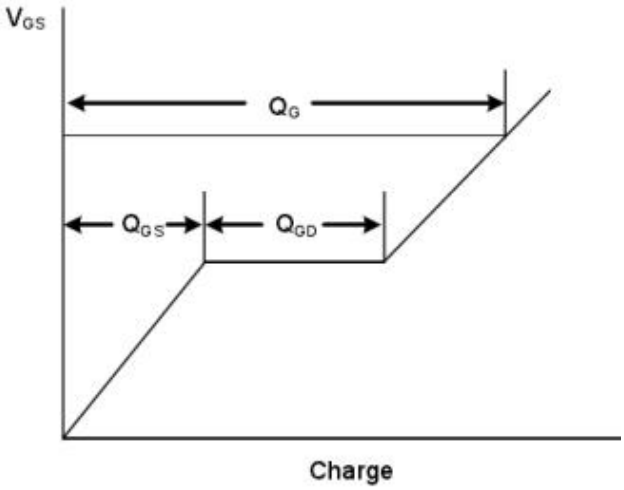

Gate Charge Waveform

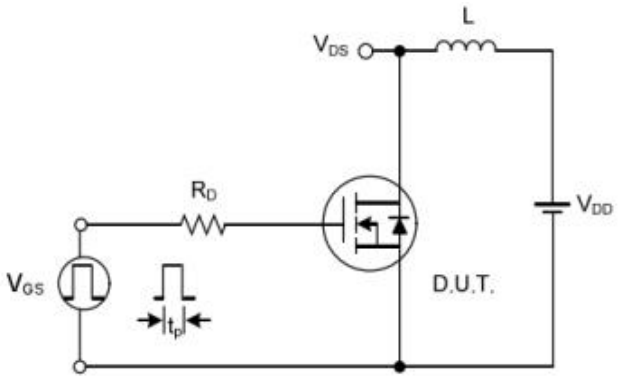

Unclamped Inductive Switching Test Circuit

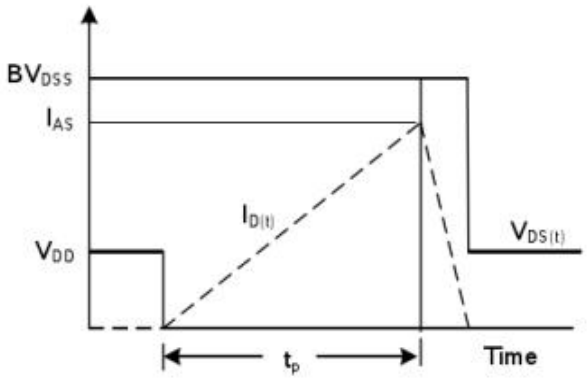

Unclamped Inductive Switching Waveforms

RATING AND CHARACTERISTIC CURVES

Figure.1 Output Characteristics

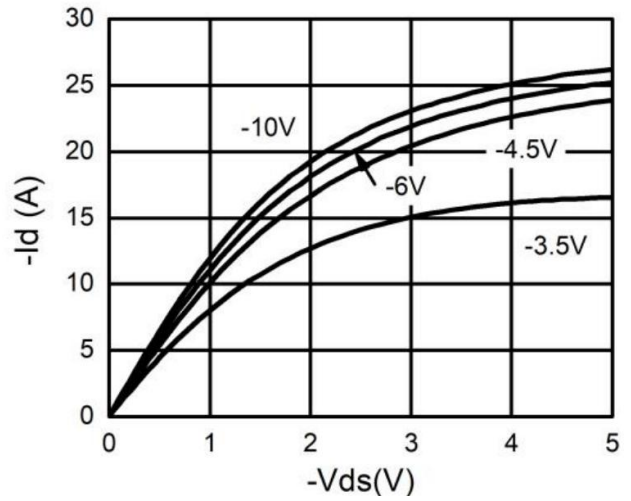

Figure.2 Transfer Characteristics

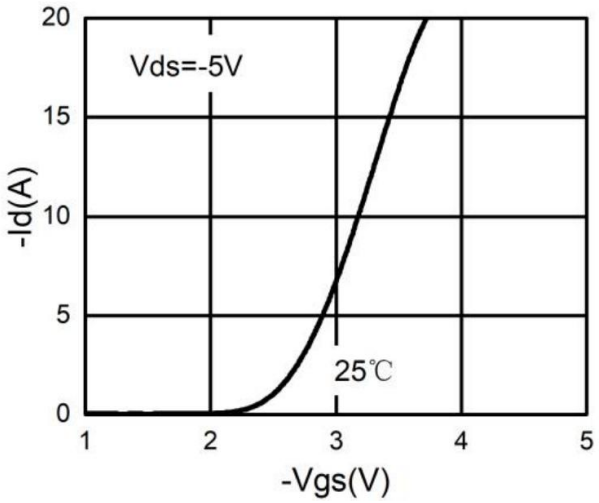

Figure.3 Power Dissipation

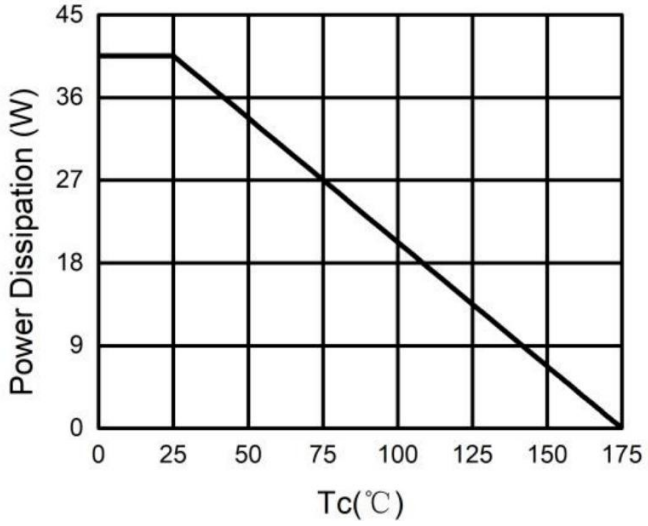

Figure.4 Drain Current

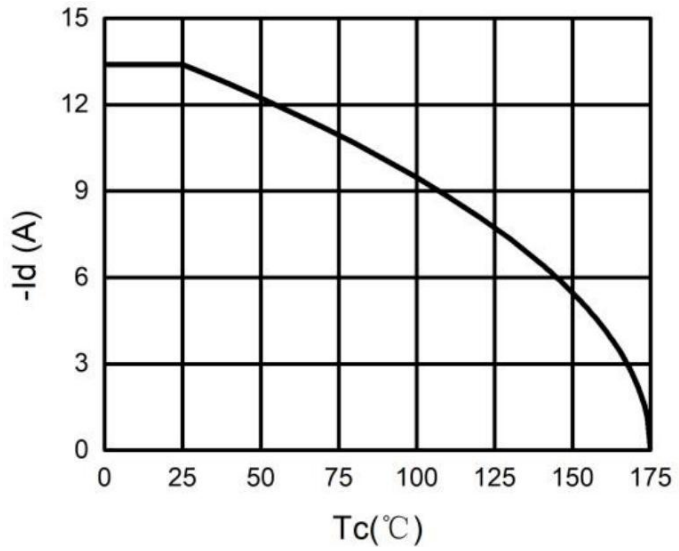

Figure.5 BV_{DSS} vs Junction Temperature

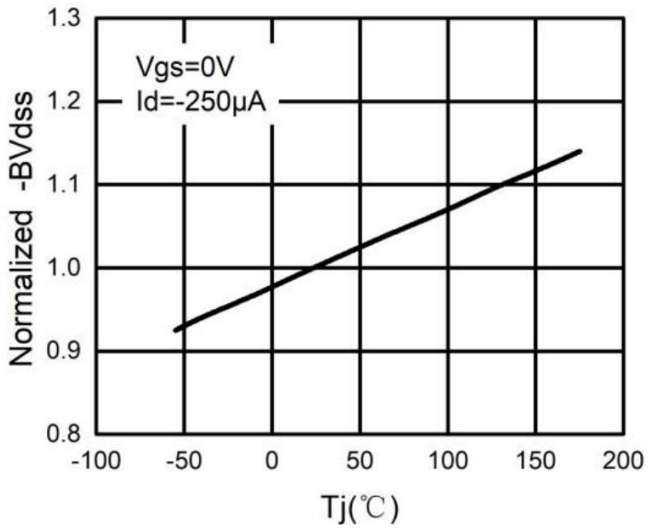

Figure.6 $R_{DS(ON)}$ vs Junction Temperature

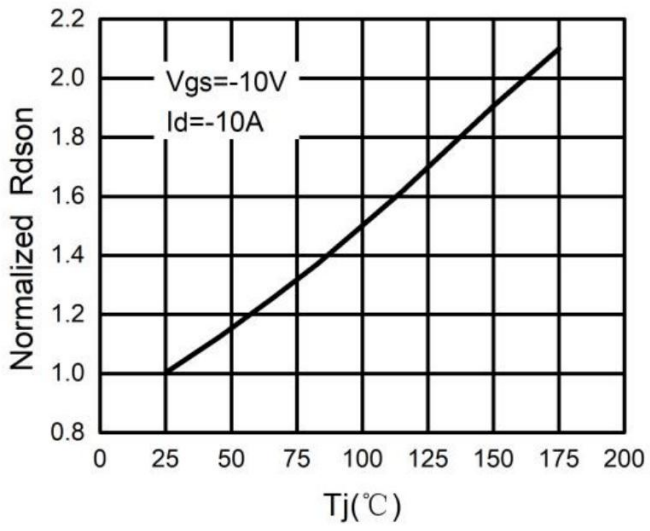

Figure.7 Gate Charge Waveforms

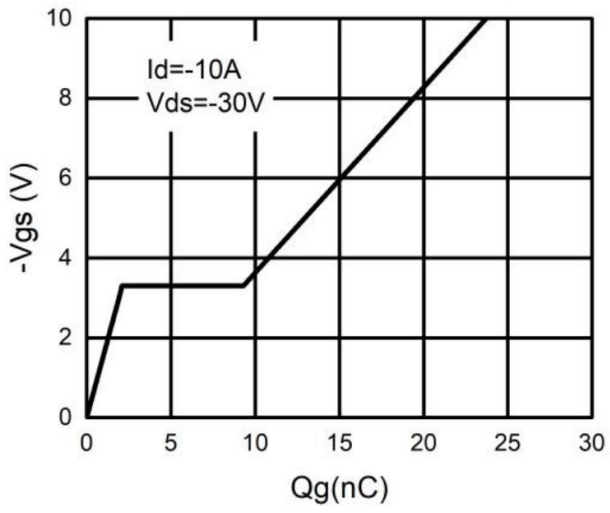

Figure.8 Capacitance

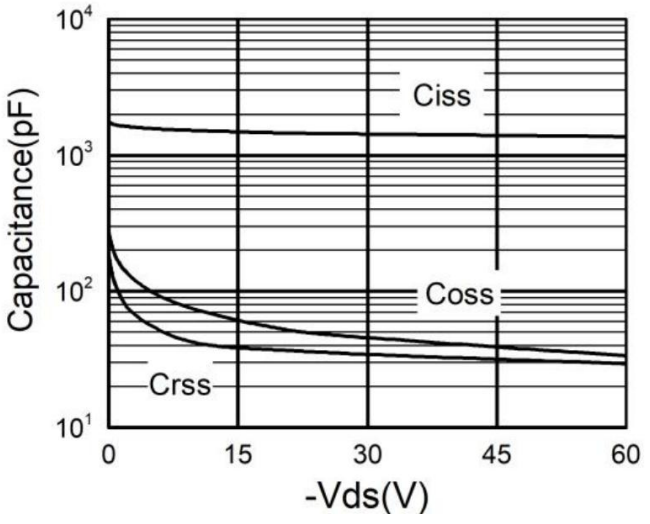

Figure.9 Body-Diode Characteristics

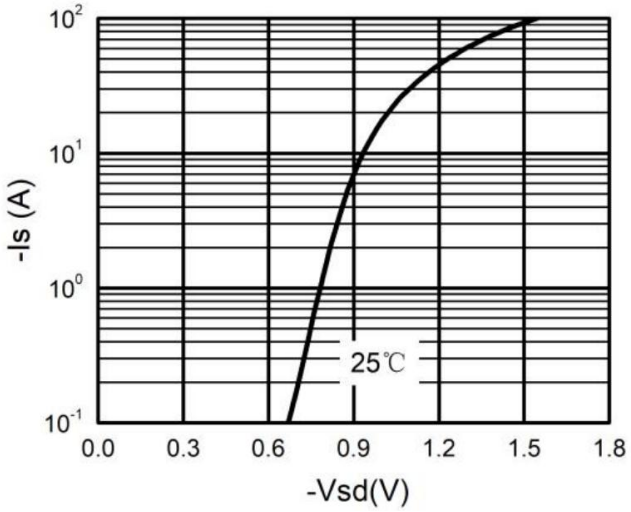

Figure.10 Maximum Safe Operating Area

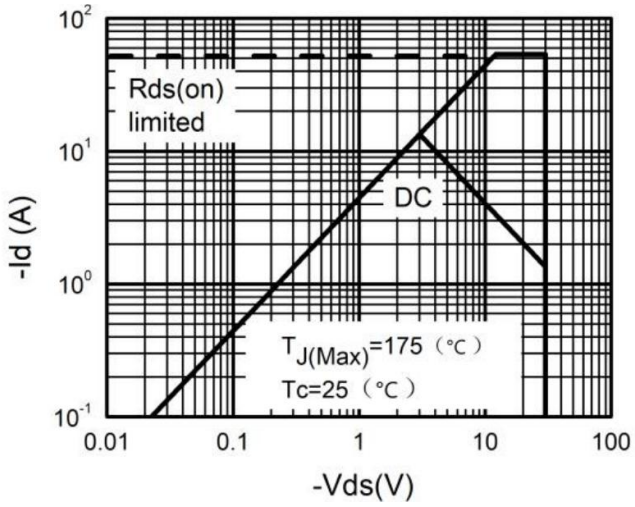

Package Outline: TO-252-2L

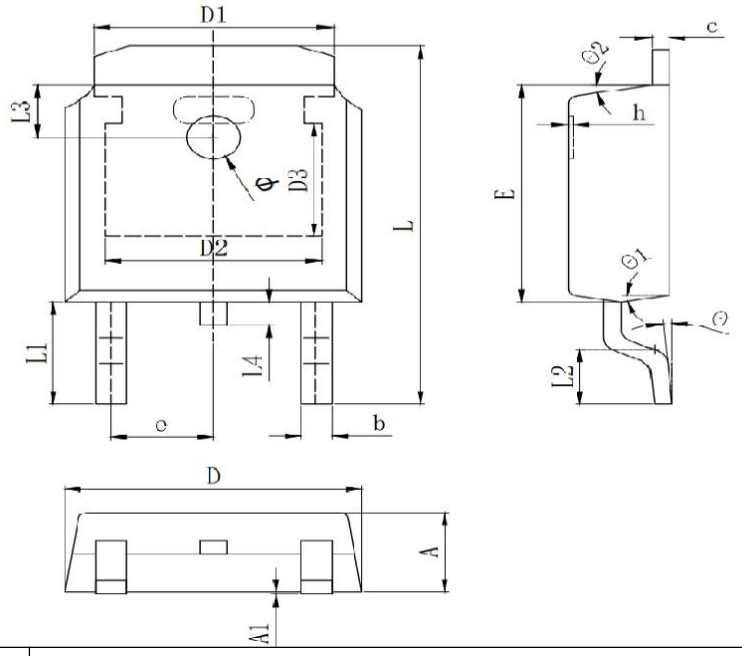

Symbol	Dimensions In Millimeters		
	Min	Typ	Max
A	2.200	2.300	2.400
A1	0.000		0.127
b	0.640	0.690	0.740
c	0.460	0.520	0.580
D	6.500	6.600	6.700
D1	5.334REF		
D2	4.826REF		
D3	3.166REF		
E	6.000	6.100	6.200
e	2.286TYP		
h	0.000	0.100	0.200
L	9.900	10.100	10.300
L1	2.888REF		
L2	1.400	1.550	1.700
L3	1.600REF		
L4	0.600	0.800	1.000
Φ	1.100	1.200	1.300
θ	0°		8°
θ1	9° TYP		
θ2	9° TYP		