ISO9001 & ISO14001 & TS16949 **CHILISIN ELECTRONICS CORP.**

RoHS & Halogen Free & REACH Compliance.

SPECIFICATION FOR APPROVAL

Customer：

Customer P/N:

Drawing No：

Quantity： **0** **Pcs.** **Date：** **2019/03/23**

Chilisin P/N： **LVF252A12-470M-N**

SPECIFICATION ACCEPTED BY:	
COMPONENT ENGINEER	
ELECTRICAL ENGINEER	
MECHANICAL ENGINEER	
APPROVED	
REJECTED	

注意事項

此產品屬於工業級標準品，非車規產品！不能使用汽車配件中，若客戶未明確告知而私自使用到汽車配件中，產生任何後果，原廠不予負責售後服務，謝謝!

Drawn by	Checked by	Approved by
bingzhi.huang	**bingzhi.huang**	**Steven**

ISO9001 & ISO14001 & TS16949 CHILISIN ELECTRONICS CORP.

LVF252A12 Series Specification

1 Scope: This specification applies to Wire Wound Power Inductors

2 Part Numbering:

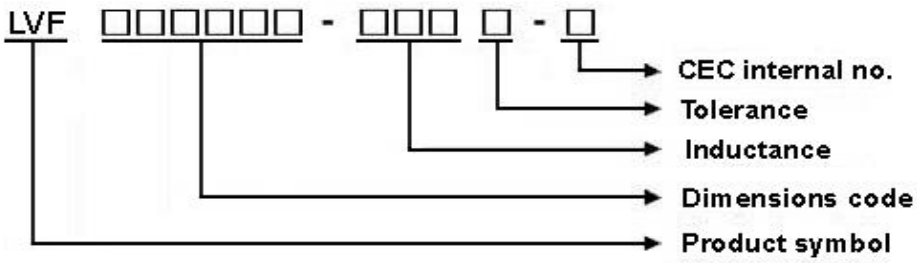

3 Rating:

Operating Temperature: －５５℃～１２５℃(Including self - temperature rise)

Storage Temperature: ２０℃～２５℃ R.H.６５％(In Tape & Reel Condition)

4 Marking:

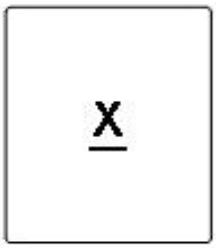

Ex : LVF252A12 -1R0M-N

Marking : C

Marking color : Black

5 Standard Testing Condition

	Unless otherwise specified	In case of doubt
Temperature	Ordinary Temperature(15 to 35℃)	20 to 30℃
Humidity	Ordinary Humidity(25 to 85% RH)	50 to 80 %RH

LVF252A12 Series Specification

6 Configuration and Dimensions:

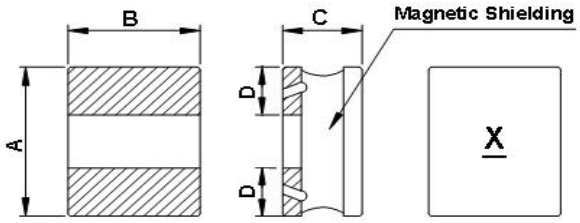

TYPE	LVF252A12
A	2.5±0.25 m/m
B	2.0±0.25 m/m
C	1.2MAX m/m
D	0.8 typ. m/m

此產品為底部焊錫工藝

7 Electrical Characteristics:

Part No.	Inductance (uH)	Test Freq.	RDC (Ω)±30%	Isat(mA) Typ.(Max)	Irms(mA) Typ.(Max)	Tolerance (±%)	Marking
LVF252A12-470□-N	47	1MHz,200mV	2.76	380(300)	250(200)	20,30	R

NOTE: □-tolerance M=±20% / T=±30%

1.Operating temperature range －５５℃～１２５℃(Including self - temperature rise)

2.Isat for Inductance drop 30% from its value without current.

3.Irms for a 40℃ temperature rise from 25℃ ambient.

"-N" FOR COMPLETELY LEAD FREE TYPE(INCLUDING FERRITE BODY & SOLDER)

LVF252A12 Series Specification

8 LVF252A12 Series

8.1 Construction:

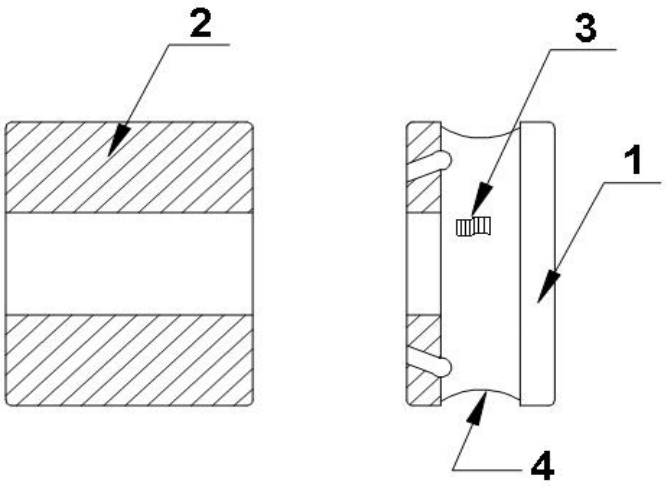

8.2 Material List:

No	Part	Material
1	CORE	FERRITE
2	TERMINAL	Ag/Cu/Ni/Sn
3	WIRE	Grade 180
4	EPOXY	Magnetic powder resin

LVF252A12 Series Specification

9 Packaging:

9.1 Packaging -Cover tape

The force for tearing off cover tape is 10 to 100 grams in the arrow direction.

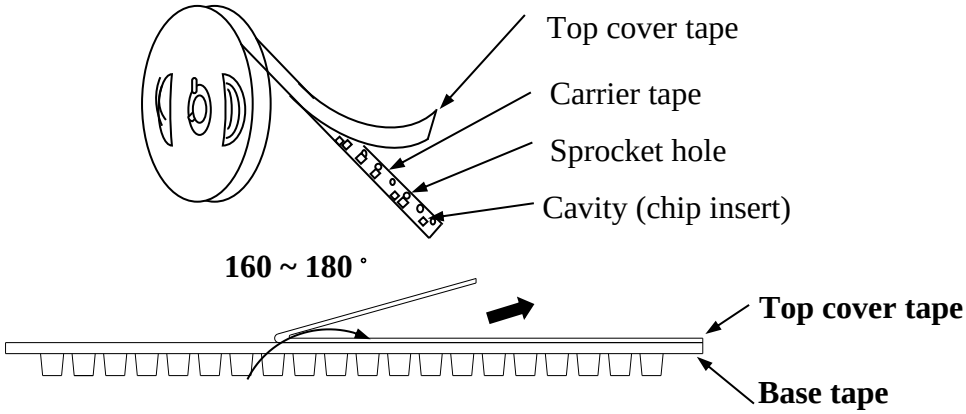

9.2 Packaging Quantity

TYPE	PCS/REEL
LVF252A12	2000

9.3 Reel Dimensions

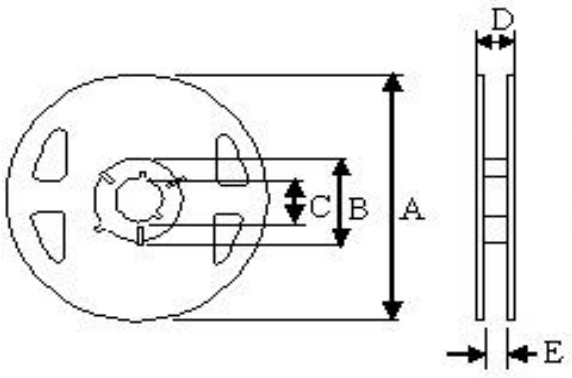

Dimensions in mm

TYPE	A	B	C	D	E
LVF252A12	180	60	13	14.4	8.4

LVF252A12 Series Specification

9 Packaging:

9.4 Tape Dimensions in mm

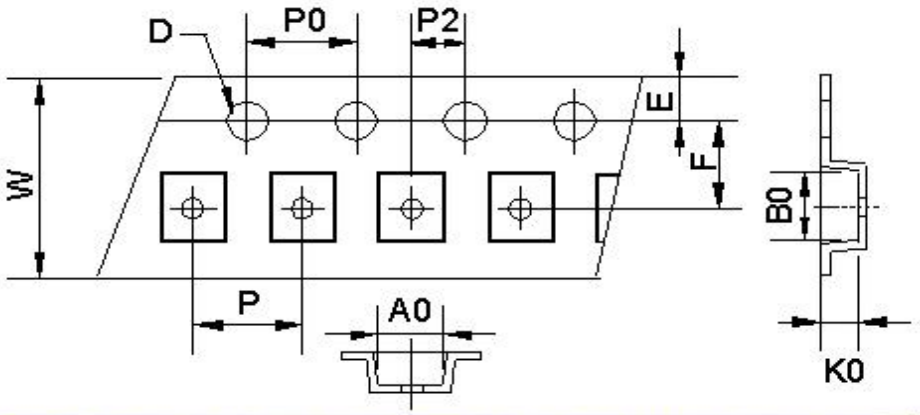

TYPE	A0	B0	K0	D	E	F	W	P	P0	P2
LVF252A12	2.4	2.7	1.35	1.55	1.75	3.5	8	4	4	2

10 Recommended Land Pattern:

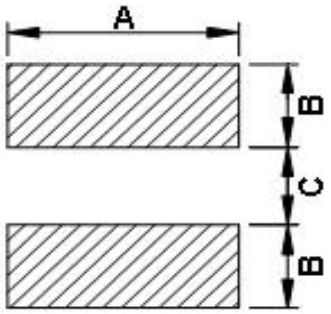

Dimensions in mm

TYPE	A(m/m)	B(m/m)	C(m/m)
LVF252A12	2.2	0.85	0.8

11 Note:

1. Please make sure that your product has been evaluated and confirmed against your specifications when our product is mounted to your product.
2. Do not knock nor drop.
3. All the items and parameters in this product specification have been prescribed on the premise that our product is used for the purpose,under the condition and in the environment agreed upon between you and us. You are requested not to use our product deviating from such agreement.
4. Please keep the distance between transformer/coil and other components (refer to the standard IEC 950)
5. The moisture sensitivity level (MSL) of products is classified as level 1.

LVF252A12 Series Specification

11 Note:

6. Void Appearance tolerance Limit

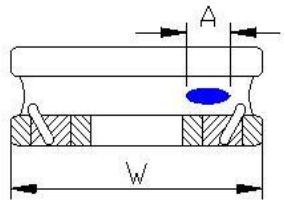

Exposed wire tolerance limit of coating resin part on product side.
The unilateral should be no more than two holes.

A≦	W/2 GOOD
A＞	W/2 NG

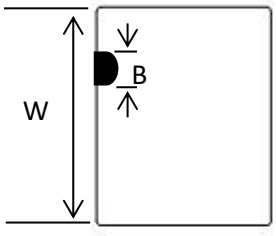

The appearance standard pf the chipping size in top side.

B≦	W/5 GOOD
B＞	W/5 NG

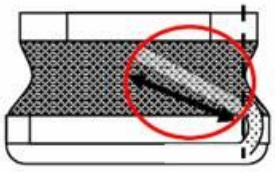

External appearance criterion for wxposed wire
Exposed end of the winding wire at the side should be acceptable.