LOW-JITTER SAW OSCILLATOR (SPSO)

OUTPUT : CMOS

XG-1000CA / CB

- Output frequency range : 50 MHz to 170 MHz
- Supply voltage : 1.8 V / 2.5 V / 3.3 V
- Frequency tolerance : ±50×10^{-6}, ±100×10^{-6}
- Output : CMOS
- Function : Output enable (OE)
- External dimensions : CA: 7.0×5.0×1.2 mm
  CB: 5.0×3.2×1.1 mm

• Very low jitter and low phase noise by SAW unit.

Pb Free RoHS Compliant

Product Number (please contact us)
XG-1000CA: Q3851CA00xxxx00
XG-1000CB: Q3851CB00xxxx00

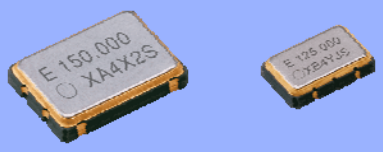

Actual size

XG-1000CA	XG-1000CB
	

Specifications (characteristics)

Item	Symbol	Specifications			Conditions / Remarks	
Output frequency range *1	f_0	50.000 MHz to 170.000 MHz				
		75.000 MHz, 98.304 MHz, 100.000 MHz, 106.250 MHz, 125.000 MHz, 150.000 MHz			Standard frequency	
Supply voltage	V_{CC}	E: 1.8 V ±0.1V	D: 2.5 V ±0.125 V	C: 3.3 V ±0.3V		
Storage temperature	T_stg	-40 °C to +100 °C			Storage as single product.	
Operating temperature	T_use	-10°C to +70°C				
Frequency tolerance *2	f_tol	B:±50 × 10^{-6} C:±100 × 10^{-6}				
Current consumption	Icc	20 mA Max.	25 mA Max.	35 mA Max.	OE=V_{CC}, No load condition	
Disable current	I_dis	15 mA Max.	20 mA Max.	30 mA Max.	OE=GND	
Symmetry	SYM	40 % to 60 %	45 % to 55 %		f_0≤ 125 MHz	50 % V_{CC} level, L_CMOS ≤ Max.
		40 % to 60 %			f_0> 125 MHz	
Output voltage	V_{OH}	V_{CC}-0.35 V Min			E:I_{OH} = -6 mA / C,D:I_{OH} = -8 mA	
	V_{OL}	0.35 V Max.			E:I_{OL} = 6 mA / C,D:I_{OL} = 8 mA	
Output load condition (CMOS)	L_CMOS	15 pF Max.				
Input voltage	V_{IH}	70 % V_{CC} Min.			OE terminal	
	V_{IL}	30 % V_{CC} Max.				
Rise time / Fall time	t_r / t_f	2 ns Max.			Between 20% V_{CC} and 80% V_{CC} level, L_CMOS ≤ Max	
Start-up time	t_str	10 ms Max.			Time at minimum supply voltage to be 0 s	
Jitter *3	t_{RMS}	3 ps Typ.			σ (RMS of total distribution)	
	t_{p-p}	25 ps Typ.			Peak to Peak	
Frequency aging	f_aging	±5 × 10^{-6} / year Max.			+25 °C, First year, V_{CC}=1.8 V, 2.5 V, 3.3 V	

*1 Please contact us for requirements non-standard frequencies.
*2 This includes initial frequency tolerance, temperature variation, supply voltage variation and load variation.
*3 Tested using a DTS-2075 Digital timing system made by WAVECREST with jitter analysis software VISI6.

Product Name (Standard form)

XG-1000 CA 150.000000MHz D B
① ② ③ ④⑤

①Model ②Package type ③Frequency
④Supply voltage
⑤Frequency tolerance / Operating temperature

④Supply voltage	
C	3.3 V Typ.
D	2.5 V Typ.
E	1.8 V Typ.

⑤Frequency tolerance	
B	±50 × 10^{-6} / -10 to +70°C
C	±100 × 10^{-6} / -10 to +70°C

External dimensions (Unit:mm)

● XG-1000CA

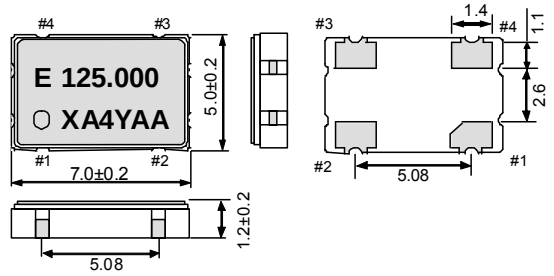

● XG-1000CB

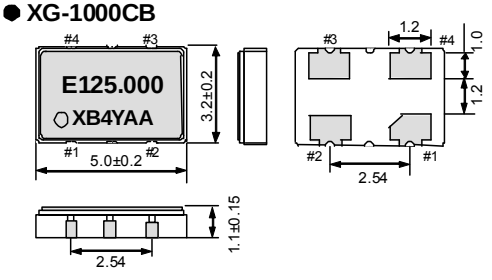

Pin map

Pin	Connection
1	OE
2	GND
3	OUT
4	Vcc

#2 is connected to the cover

OE pin = HIGH : Specified frequency output.
OE pin = LOW : Output is high impedance

Footprint (Recommended) (Unit:mm)

● XG-1000CA

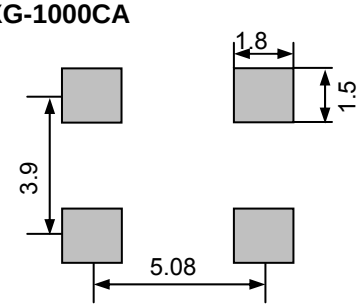

● XG-1000CB

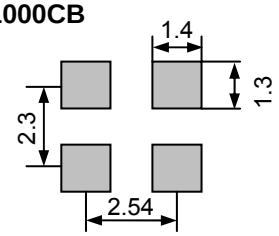

To maintain stable operation, provide a 0.01uF to 0.1uF by-pass capacitor at a location as near as possible to the power source terminal of the crystal product (between Vcc - GND).

PROMOTION OF ENVIRONMENTAL MANAGEMENT SYSTEM CONFORMING TO INTERNATIONAL STANDARDS

At Seiko Epson, all environmental initiatives operate under the Plan-Do-Check-Action (PDCA) cycle designed to achieve continuous improvements. The environmental management system (EMS) operates under the ISO 14001 environmental management standard.

All of our major manufacturing and non-manufacturing sites, in Japan and overseas, completed the acquisition of ISO 14001 certification.

ISO 14000 is an international standard for environmental management that was established by the International Standards Organization in 1996 against the background of growing concern regarding global warming, destruction of the ozone layer, and global deforestation.

WORKING FOR HIGH QUALITY

In order provide high quality and reliable products and services than meet customer needs,

Seiko Epson made early efforts towards obtaining ISO9000 series certification and has acquired ISO9001 for all business establishments in Japan and abroad. We have also acquired ISO/TS 16949 certification that is requested strongly by major automotive manufacturers as standard.

ISO/TS16949 is the international standard that added the sector-specific supplemental requirements for automotive industry based on ISO9001.

►Explanation of the mark that are using it for the catalog

Pb Free	►Pb free.
RoHS Compliant	►Complies with EU RoHS directive. *About the products without the Pb-free mark. Contains Pb in products exempted by EU RoHS directive. (Contains Pb in sealing glass, high melting temperature type solder or other.)
For Automotive	►Designed for automotive applications such as Car Multimedia, Body Electronics, Remote Keyless Entry etc.
Automotive Safety	►Designed for automotive applications related to driving safety (Engine Control Unit, Air Bag, ESC etc).

Notice

- This material is subject to change without notice.
- Any part of this material may not be reproduced or duplicated in any form or any means without the written permission of Seiko Epson.
- The information about applied circuitry, software, usage, etc. written in this material is intended for reference only. Seiko Epson does not assume any liability for the occurrence of infringing on any patent or copyright of a third party. This material does not authorize the licensing for any patent or intellectual copyrights.
- When exporting the products or technology described in this material, you should comply with the applicable export control laws and regulations and follow the procedures required by such laws and regulations.
- You are requested not to use the products (and any technical information furnished, if any) for the development and/or manufacture of weapon of mass destruction or for other military purposes. You are also requested that you would not make the products available to any third party who may use the products for such prohibited purposes.
- These products are intended for general use in electronic equipment. When using them in specific applications that require extremely high reliability, such as the applications stated below, you must obtain permission from Seiko Epson in advance.
  / Space equipment (artificial satellites, rockets, etc.) / Transportation vehicles and related (automobiles, aircraft, trains, vessels, etc.) / Medical instruments to sustain life / Submarine transmitters / Power stations and related / Fire work equipment and security equipment / traffic control equipment / and others requiring equivalent reliability.
- All brands or product names mentioned herein are trademarks and/or registered trademarks of their respective.