EVERLIGHT
LIGHTING FOREVER

Surface-Mount Ambient Light Sensor

ALS-PDIC15-21C/L230/TR8

Features

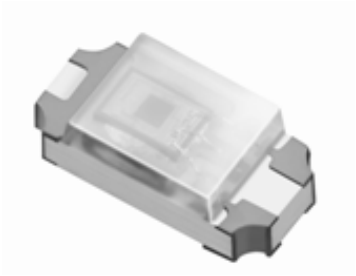

- Close responsively to the human eye spectrum
- Light to Current, analog output
- Good output linearity across wide illumination range
- Low sensitivity variation across various light sources
- Operating temperature performance, -40°C to 85°C
- Wide supply voltage range, 2.5V to 5.5V
- Size : 3.2mm(L)*1.5mm(W)*1.05mm(H)
- RoHS compliant and Pb Free package

Description

ALS-PDIC15-21C/L230/TR8 Ambient Light Sensor Device, which incorporates a photodiode and a current amplifier IC in a single chip, is a good effective solution to the power saving of display backlighting of mobile appliances, such as the mobile phones and PDAs.
Due to the high rejection ratio of infrared radiation, the spectral response of the ambient light sensor is close to human eyes.

Applications

- Detection of ambient light to control display backlighting
  - Mobile devices – mobile phones, PDAs
  - Computing device – TFT LCD monitor for Notebook computer
  - Consumer device – TFT LCD TV, plasma TV, video camera, digital camera, toys
- Automatic residential and commercial management
- Automatic contrast enhancement for electronic signboard
- Ambient light monitoring device for daylight and artificial light
  - Street light, CCD/CCTV

Package Dimensions

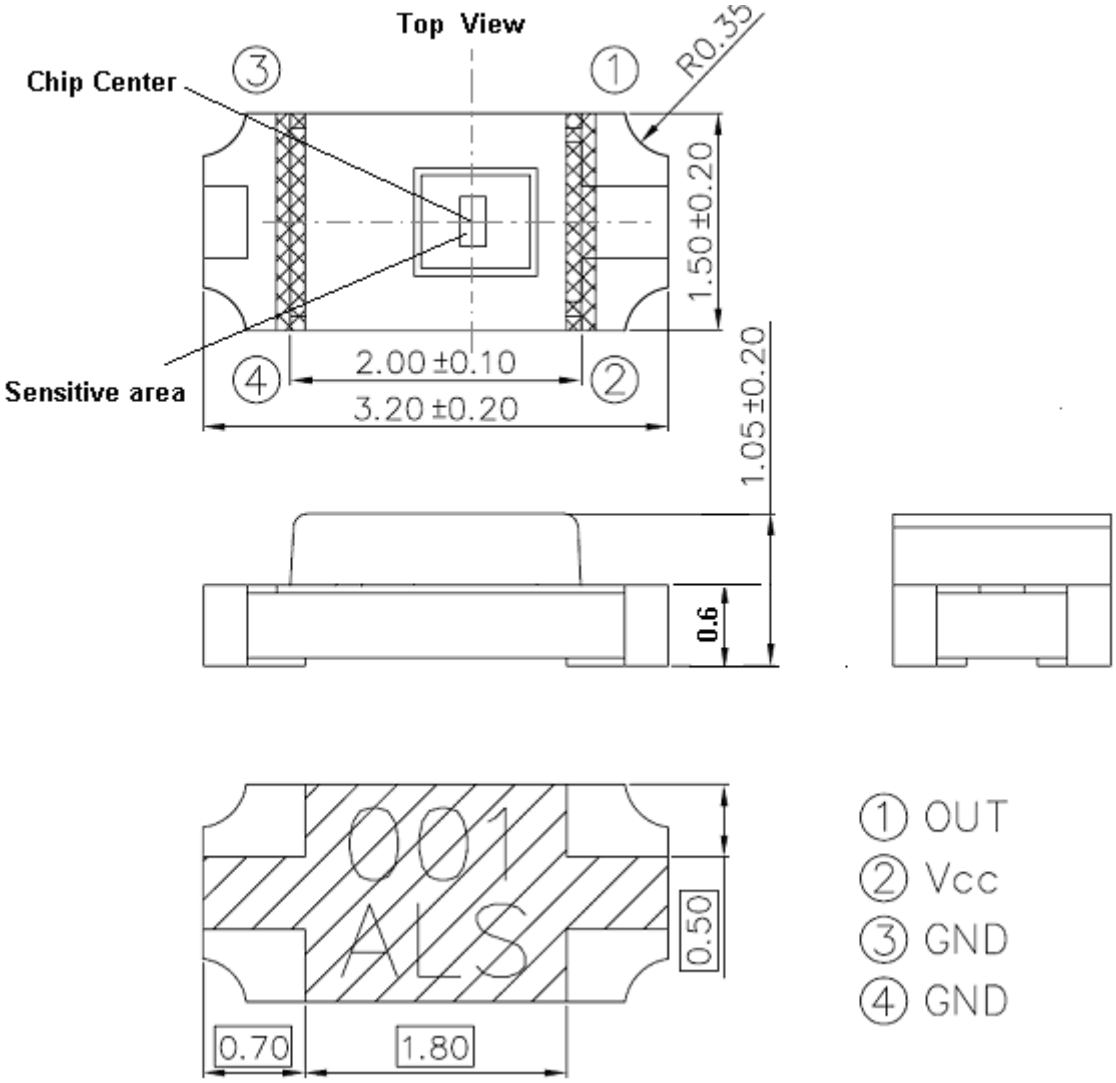

For reflow soldering (propose)

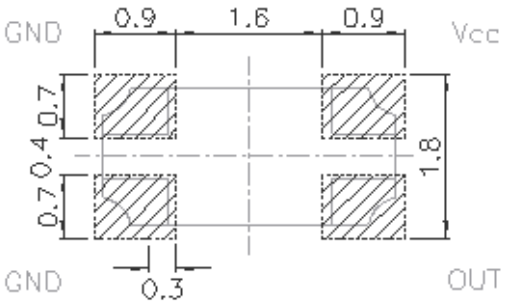

Unit: mm

Tolerances: ± 0.1mm

Absolute Maximum Ratings (Ta=25℃)

Parameter	Symbol	Rating	Unit
Supply Voltage	Vcc	-0.5~6.0	V
Output Voltage	Vo	0 ~ Vcc-0.8	V
Output Photo Current	I_{PH}	0 ~ 5	mA
Operating Temperature Range	Topr	-40 ~ +85	℃
Storage Temperature Range	Tstg	-40 ~ +100	℃
Soldering Temperature Range [Note1]	T_{sol}	260	℃
Human Body Model ESD	HBM	3000	V
Machine Model ESD	MM	300	V

Note1: For detail reflow time and the recommended temperature profile, please refer to page 8.

Recommended Operating Conditions (Ta=25℃)

Parameter	Symbol	Min.	Max.	Unit
Operating Temperature	Topr	-40	+85	℃
Supply Voltage	Vcc	2.5	5.5	V

Electrical and Optical Characteristics (Ta=25℃)

Parameter		Symbol	Min.	Typ.	Max.	Unit	Test Condition
Supply Current		Icc	—	1.2*I_{PH}	—	μA	
Dark Current		I_D	—	—	100	nA	Vcc=3V ; Ev= 0Lux
Light Current		I_{PH1}	3.6	—	9.5	μA	Vcc=3V; Ev=10Lux [Note1] [Fig.2]
		I_{PH2}	36	—	95	μA	Vcc=3V; Ev= 100Lux [Note1] [Fig.2]
		I_{PH3}	—	78	—	μA	Vcc=3V; Ev= 100Lux [Note2] [Fig.2]
		I_{PH4}	360	—	950	μA	Vcc=3V; Ev=1000Lux [Note1] [Fig.2]
Photocurrent Ratio		I_{PH3} / I_{PH2}	—	1.2	—	—	
Saturation Output Voltage		Vo	2.20	2.35	—	V	Vcc=3V; Ev= 100Lx, R_L=75KΩ [Fig.3]
Peak Sensitivity Wavelength		λ_p	—	590	—	nm	
Switching Time	**Rise Time**	tr	—	0.356	—	ms	Vcc=3V,R_L=27KΩ [Fig.4]
	Fall Time	tf	—	1.11	—	ms	
	Delay Time	td	—	2.2	—	ms	
	Storage Time	ts	—	0.692	—	ms	

Note:

1. White Fluorescent light (Color Temperature = 6500K) is used as light source. However, White LED is substituted in mass production.
2. Illuminance by CIE standard illuminant-A / 2856K, incandescent lamp.

Rankings

Rank	Test Condition	Min	Max	Unit
1	V_{CC}=3V; Ev= 100Lx	36	60	uA
2		50	80	
3		65	95	

Fig.1 Block Diagram

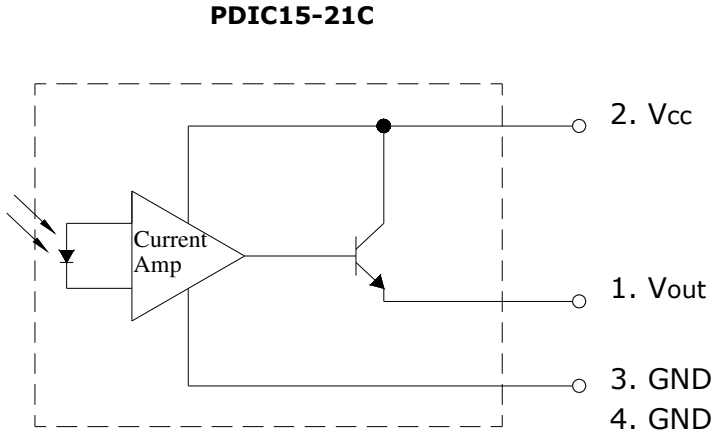

Fig.2 Measurement Method of Light Current

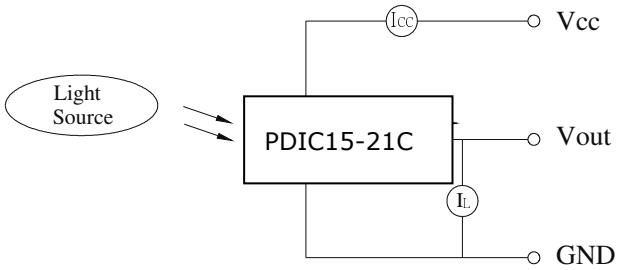

Fig.3 Measurement Method of Saturation Output Voltage

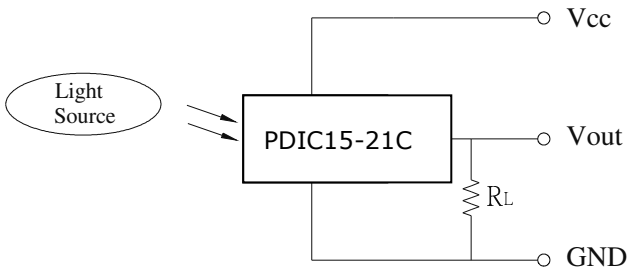

Fig.4 Switching Time Measurement Method

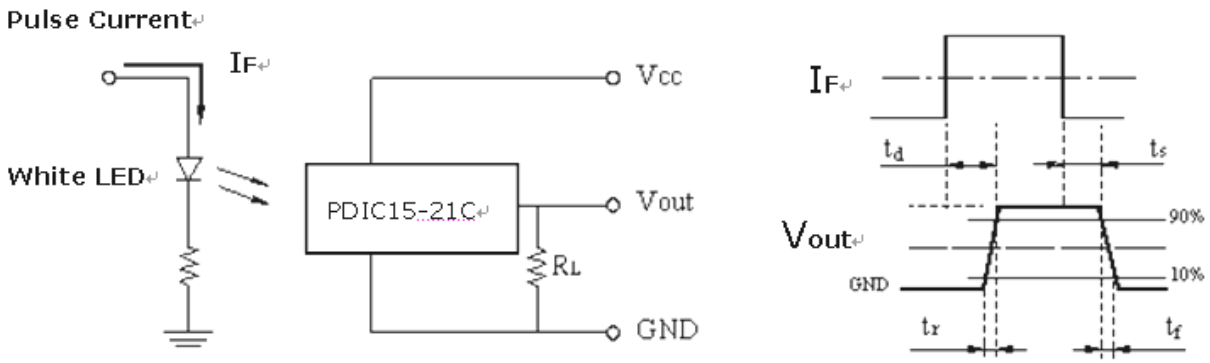

Typical Electrical and Optical Characteristics Curves

Fig.5 Light Current vs. Illuminance

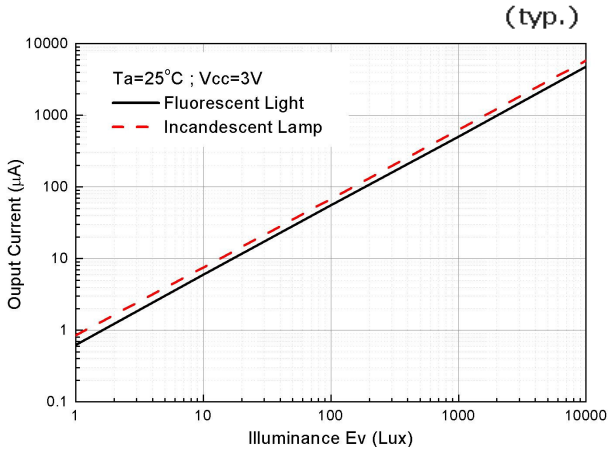

Fig.6 Dark Current vs. Temperature

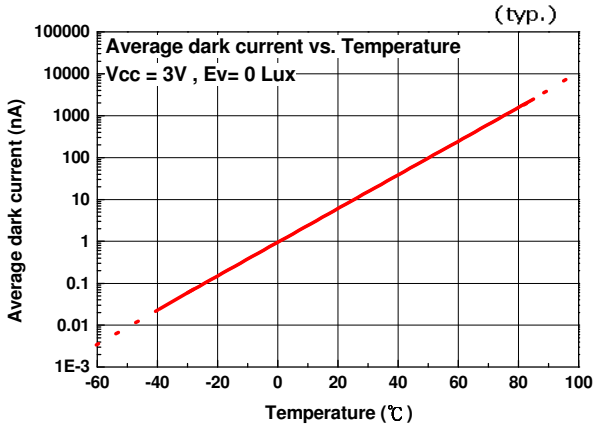

Fig.7 Light current vs. Temperature

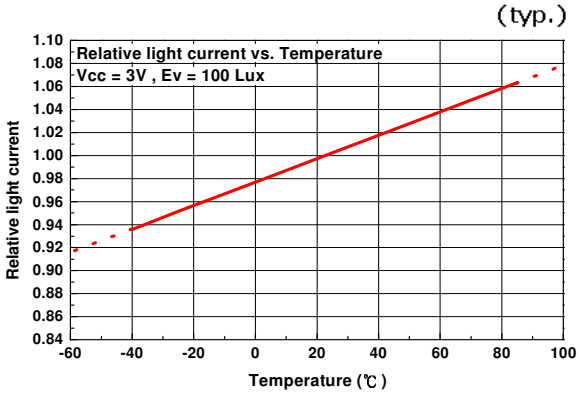

Fig.8 Light current vs. Supply Voltage

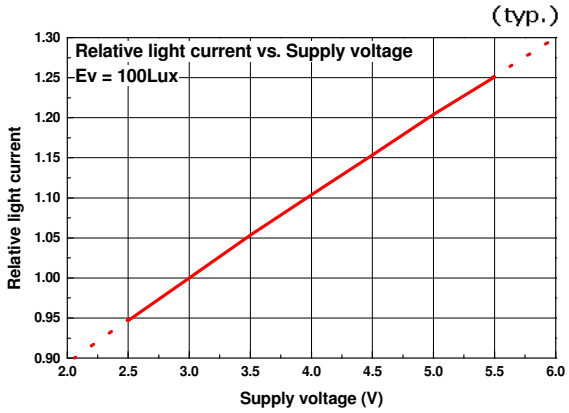

Fig.9 Spectral Response

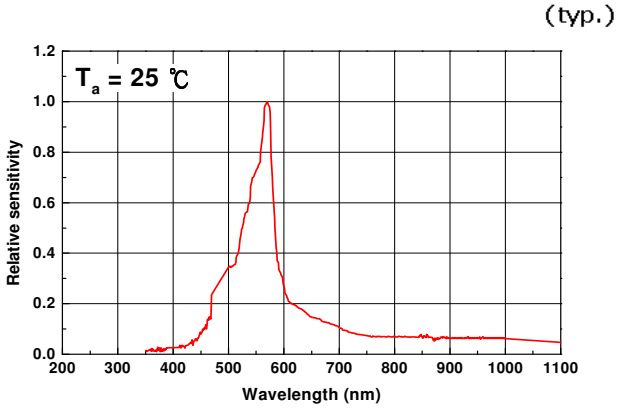

Fig.10 Output voltage vs. Temperature

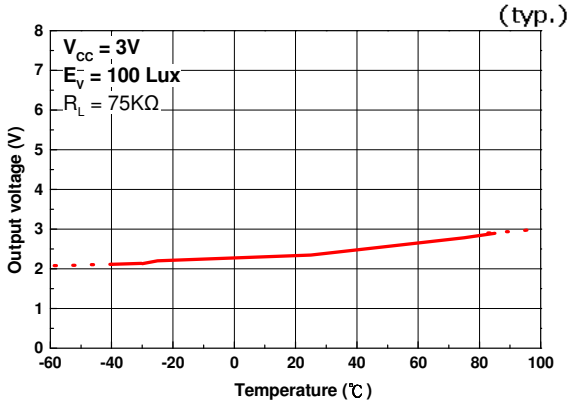

Fig.11 Output Voltage vs. Illuminance

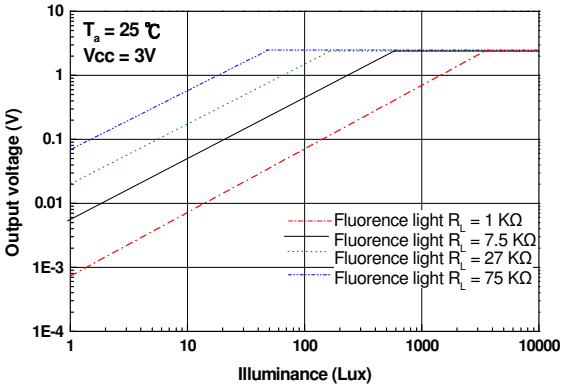

Fig.12 Relative Intensity vs. Radiation Diagram

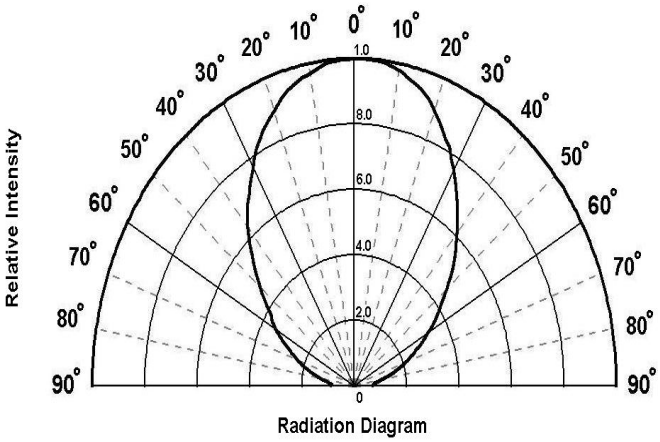

Fig.13 Relative Intensity vs. Angle Displacement

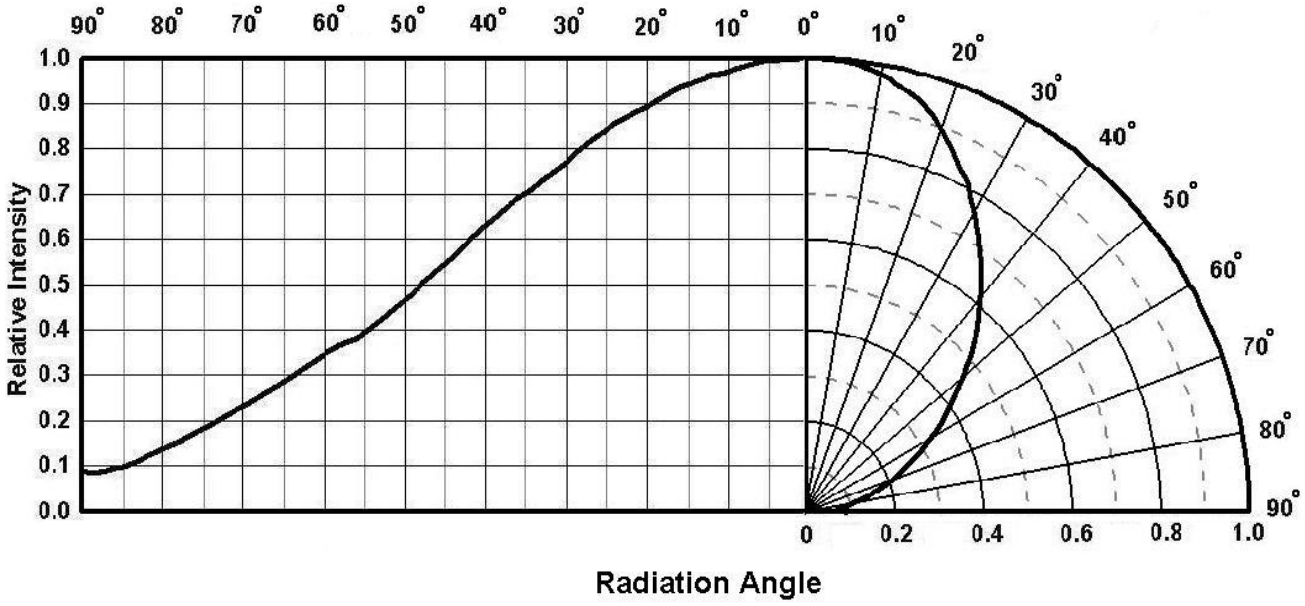

Converting Photocurrent to Voltage

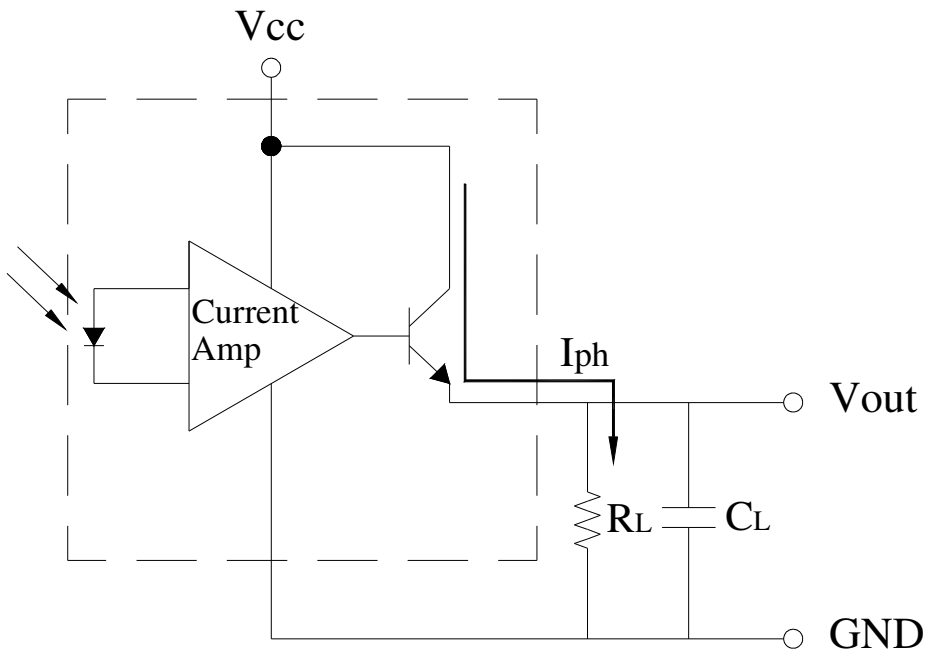

Note:

1. The output voltage (V_{out}) is the product of photocurrent (I_{PH}) and loading resistor (R_L)
2. A right loading resistor shall be chosen to meet the requirement of maximum ambient light, and output saturation voltage:

$$V_{out(max.)} = I_{out(max.)} \times R_L \leqq V_{out(saturation)} = V_{cc} - 0.8V$$

3. To avoid 60Hz ripple from fluorescent lamps, we suggest that the time constant must be greater than 0.5 second:

$$R_L \times C_L \geqq 0.5 \quad \text{(empirical data)}$$

Recommended method of storage

Reflow Terms: JEDEC Level 2 Specification

Dry box storage is recommended as soon as the aluminum bag has been opened prevent moisture absorption. The following conditions should be observed, if dry boxes are not available:

- Storage temperature 10℃ to 30℃
- Storage humidity ≦60%RH max

After more than one year under these conditions moisture content will be too high for Reflow soldering. In case of moisture absorption, the devices will recover to former condition by drying under the following condition:

192 hours at 40℃+5℃/-0℃ and 5%RH (dry air / nitrogen), or
96 hours at 60℃+5℃ and < 5%RH for all device containers, or
24 hours at 125℃+5℃ not suitable for reel or tubes

ESD Precaution:

Proper storage and handing procedures should be followed to prevent ESD damage to the devices especially when they are removed from the Anti-static bag. Electro-Static Sensitive Devices warning labels are on the packing.

Recommended Solder Profile

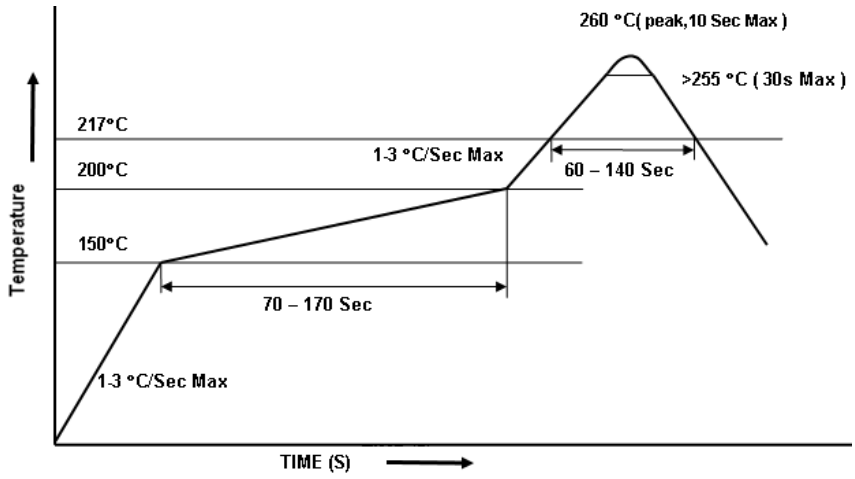

Notice:

(1) Reflow soldering should not be done more than two times.
(2) When soldering, do not put stress on the devices during heating.
(3) After soldering, do not warp the circuit board.

Soldering Iron

Each terminal is to go to the tip of soldering iron temperature less than 350℃ for 3 seconds within once in less than the soldering iron capacity 25W. Leave two seconds and more intervals, and do soldering of each terminal. Be careful because the damage of the product is often started at the time of the hand solder.

Repairing

Repair should not be done after the device have been soldered. When repairing is unavoidable, a double-head soldering iron should be used (as below figure). It should be confirmed beforehand whether the characteristics of the device will or will not be damaged by repairing.

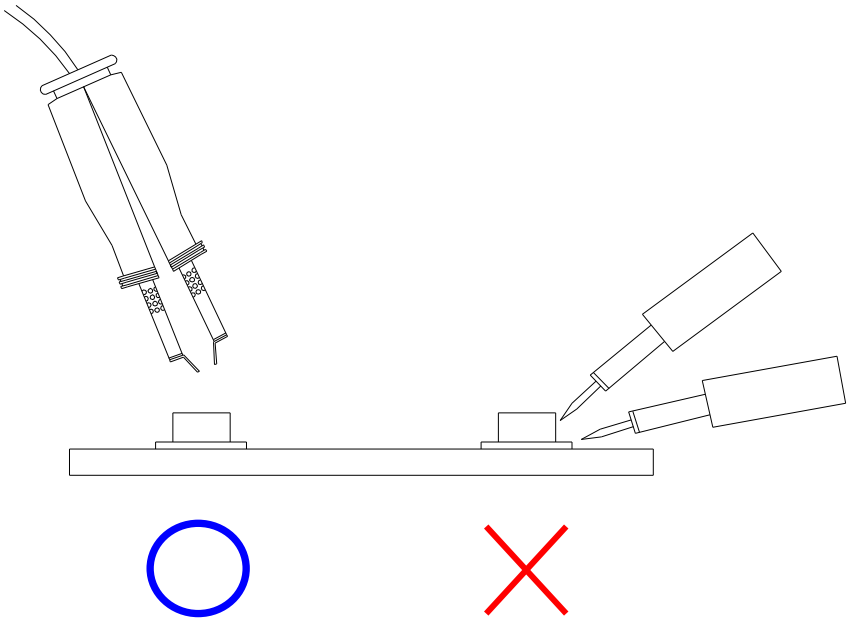

Packing Quantity Specification

2000 PCS/ 1 Reel

Label Format

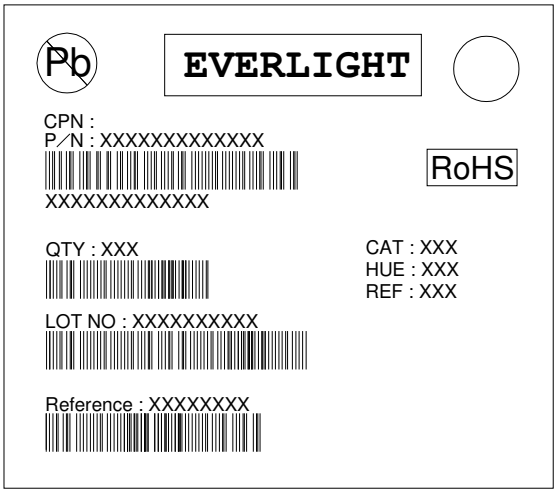

CPN: Customer's Production Number
P/N : Production Number
QTY: Packing Quantity
CAT: Ranks
HUE: Peak Wavelength
REF: Reference
LOT No: Lot Number
MADE IN TAIWAN: Production Place

Reel Dimensions

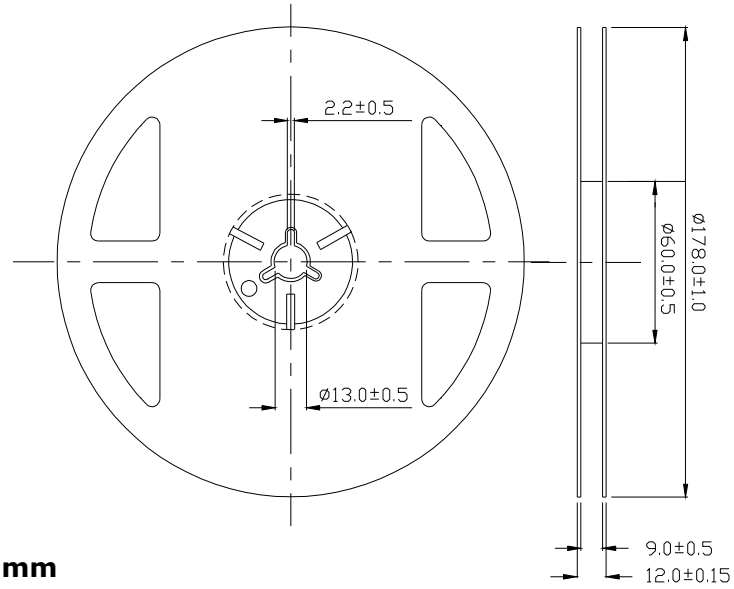

Unit: mm

Tolerance: ±0.1mm

Tape Dimensions

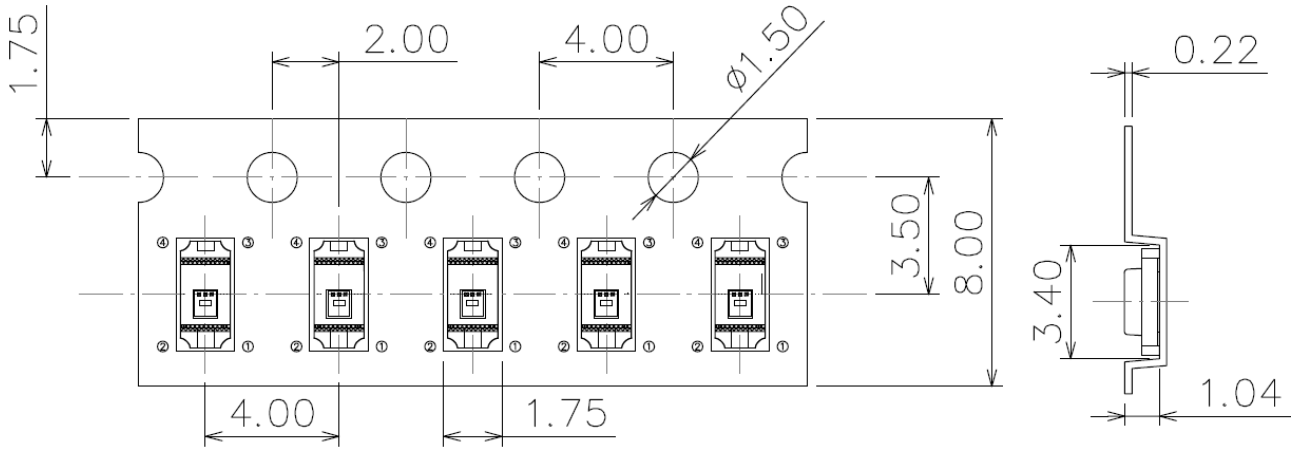

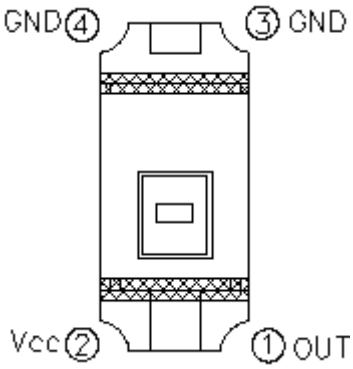

Unit: mm

Tolerance: ±0.1mm

Moisture Resistant Packaging

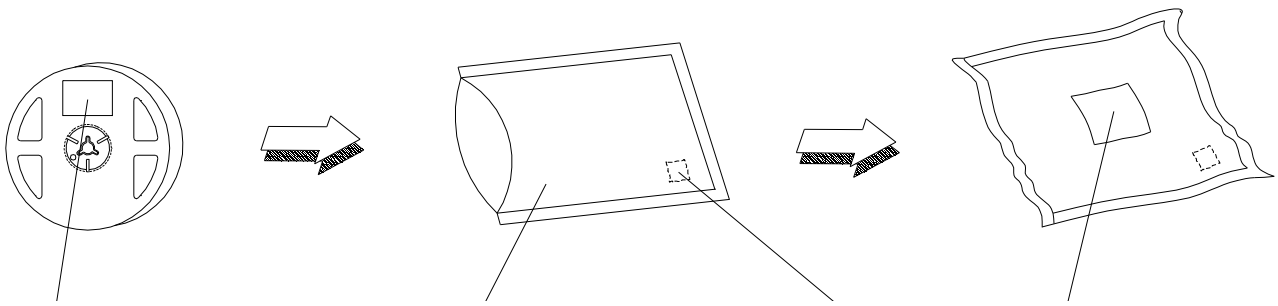

Note:

1. Above specification may be changed without notice. EVERLIGHT will reserve authority on material change for above specification.
2. When using this product, please observe the absolute maximum ratings and the instructions for using outlined in these specification sheets. EVERLIGHT assumes no responsibility for any damage resulting from use of the product which does not comply with the absolute maximum ratings and the instructions included in these specification sheets.
3. These specification sheets include materials protected under copyright of EVERLIGHT Corporation. Please don't reproduce or cause anyone to reproduce them without EVERLIGHT's consent.