SX 1278 SXS +T Series wireless modules

Instructions for use

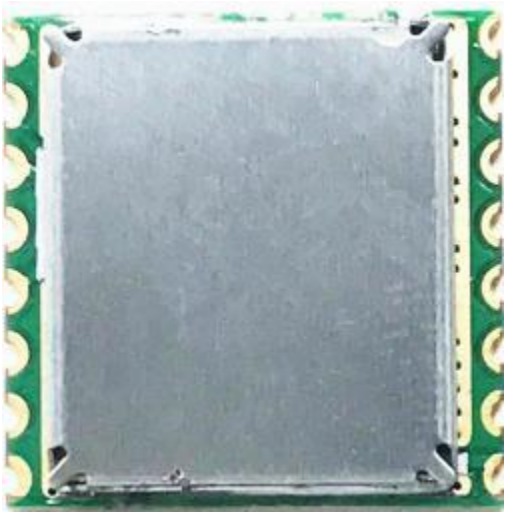

（**Subject to the actual product\module can be customized**）

Overview

SX1278SXS+TThe series of wireless modules is a radio frequency module based on the SEMTECH radio frequency integrated chip SX127X. It is a high-performance Internet of Things wireless transceiver that uses LoRa (Long Range) Spread Spectrum Technology , in the same urban and industrial application environment, the performance is better than that of radio frequency products working using traditional modulation methods (FSK, 2-FSK, 4-FSK, GFSK, PSK, ASK, OOK, etc.) , in harsh noise environments (electricity meters Near strong interference sources such as in the middle and near motors, in elevator shafts, mines, basements, etc. Shielded environment) has particularly obvious advantages, which greatly increases the communication distance and can be widely used in long-distance IoT wireless in various occasions. communication field. It has the characteristics of small size, low power consumption, long transmission distance, and strong anti-interference ability. The module integrates all RF phases

Related functions and devices have been professionally designed and rigorously tested to facilitate customers' wireless solutions and IoT Used in product design and development .

Basic Features

- ●2 FSK/GFKSTechnology, LoRa (long range) spread spectrum technology
- ●Frequency range: 410-510MHZ
- ●Super anti-interference (channel suppression ratio: 56db)
- ●High receiving sensitivity-139dbm. (32M Passive 10ppm crystal)
- ●Transmission rate: @FSK1.2-300Kbps; @Lora TM0.018-37.5Kbps
- ●Interface form: SPI
- ●Multiple frequencies are optional, and multiple transmission rates are available.FDMAand applications in frequency modulation technology.
- ●Intelligent reset, low voltage monitoring, scheduled wake-up, low power consumption mode , sleep mode
- ●Low power consumption receiving current: 10-14mA
- ●Sleep current: 0.2 uA @ SLEEP , 1.5 uA @ IDLE

●FIFO space64Bytes , 256BitFIFO TX/RX, FIFO/direct mode (recommendedFIFOpackage mode)

●RSSIChannel detection function

●Configuration: AFC/wake-up-on-air function/low power consumption/carrier sense/FEC Error Correction/AECencryption

●Working temperature range: Working temperature (℃): -40～+85

●Module size: 16*16*2mm

Application scope

- Remote control and remote data acquisition system
- Wireless meter reading (water meter, Electric meter, gas meter)
- Wireless ordering machines, original equipment in oil fields, mining areas, construction sites, factories, etc. 485/232 interface system
- Industrial data collection, transmission, and intelligent control systems
- wireless alarm system
- Smart furniture system
- Baby monitoring system/hospital paging system
- Long-distance wireless small data transmission system

Technical Parameters

Test conditions: Ta=25°C, VCC=3.3V

Technical indicators	parameter	Remark
Operating Voltage	DC 1.8～3.6V	General application3.0V/3.3V
Center frequency	433MHz	Hardware frequency can be customized, range 119～ 1050MHz
frequency error	±10ppm	
Modulation	FSK / GFSK / MSK / GMSK / LoRaTM / OOK	Configurable via register
Receive sensitivity	-139dBm _	@ LoRa TM &62.5 Khz & SF =12&146 bps
receive current	<14mA	
Emission current	120mA@+20dBm 90mA@+ 17dBm 29mA@+13dBm	
Sleep current	0.2 uA @ SLEEP , 1.5 uA @ IDLE	
Transmission rate	1.2K～300Kbps@FSK 0.018K～37.5 Kbps @ LoRaTM	Programmable configuration
Communication distance	>3500rice	@1.2 Kbps /2- FSK /+21 dBm
Antenna impedance	50ohms	
Operating temperature	-40～85 °C	
storage temperature	-50～125°C	
Dimensions	16*16*2 mm	Subject to size chart

Interface Description

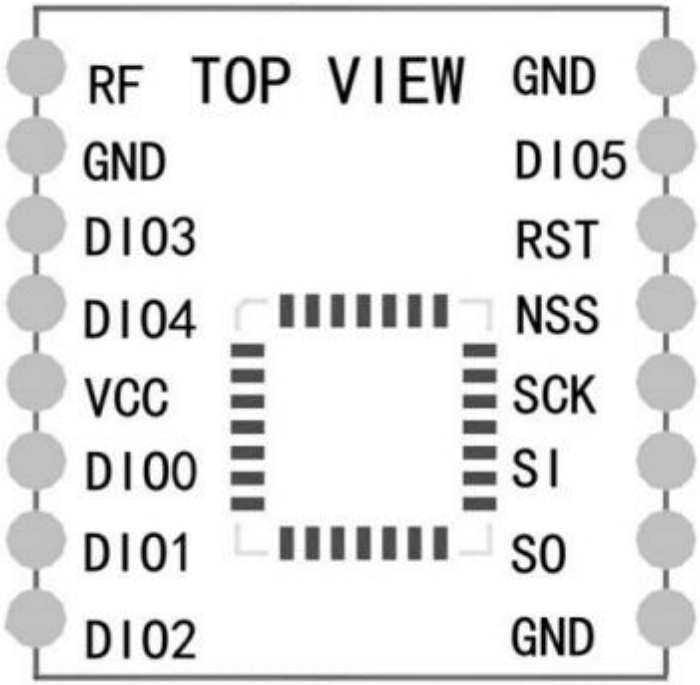

Pin definition

serial number	name	type	Function
1	GND	-	Negative ground of power supply
2	SO	I	SPI interface MISO data output
3	SI	O	SPI interface MOSI data input
4	SCK	I	SPI interface SCLK clock input
5	NSS	I	SPI interface NSS Select input
6	RESET	I	reset pin
7	DIO5	I/O	direct chip DIO 5 number I/O pins, software settings
8	GND	-	Negative ground of power supply
9	RF	I/O	RF Signal input / output, connect 50Ω antenna
10	GND	-	Negative ground of power supply
11	DIO3	I/O	direct chip DIO 3 number I/O pins, software settings
12	DIO4	I/O	direct chip DIO 4 number I/O pins, software settings
13	VCC	-	Positive pole of power supply 1.8 ~ 3.7V
14	DIO0	I/O	direct chip DIO 0 number I/O pins, software settings
15	DIO1	I/O	direct chip DIO 1 number I/O pins, software settings
16	DIO2	I/O	direct chip DIO 2 number I/O pins, software settings

Circuit connection instructions

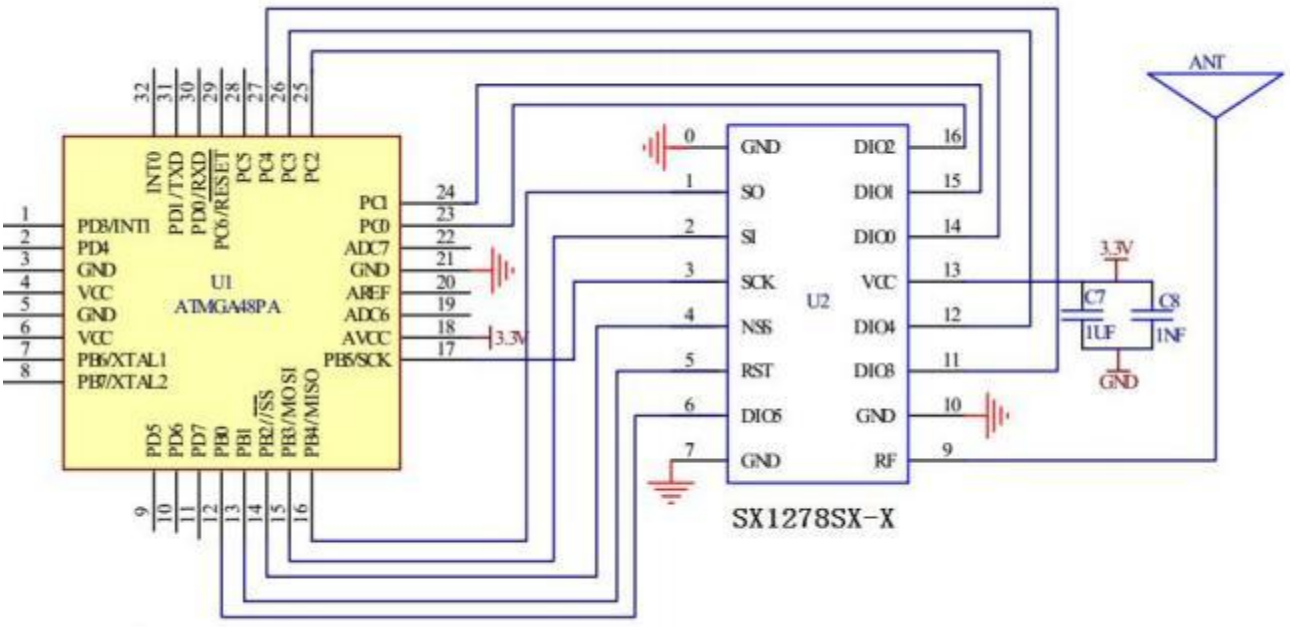

Dimensions description

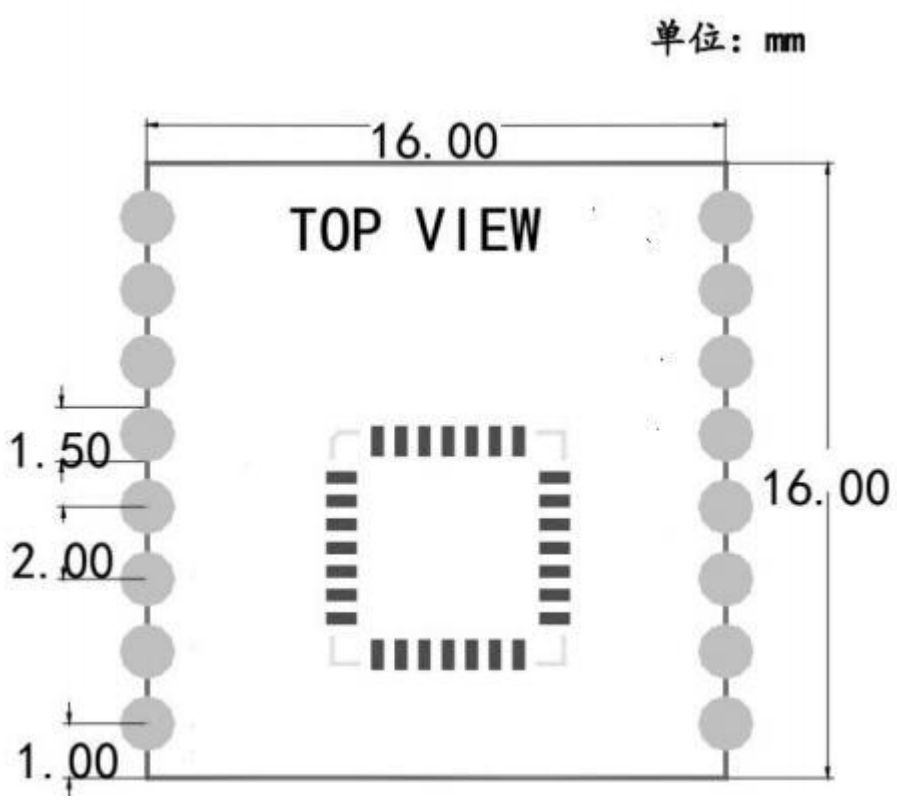

Model Ordering Symbol

SX1278S31S+T-X1	patch	315MH	Z	With shield
SX1278S43S+T-X1	patch	433MH	Z	With shield

Notice to users:

1. Due to product version upgrades or other reasons, the content of this document will be updated from time to time. Unless otherwise agreed, this document

They are provided as a guide only and all statements, information and recommendations in this document do not create any express or implied warranty.

2. The company reserves the right of final interpretation and modification of all information provided , and is subject to change without prior notice.