SSS1700B1 Data Specification

Ver. 0.1 – Created on Jan. 26th, 2020



5F.-1, No.22, Taiyuan St., Tai Yuen Hi-Tech Industrial Park, Zhubei City, Hsinchu County 302, Taiwan (R.O.C.)

All information contained within is subject to change without any prior written notice. Copyright Protected. All rights reserved

Declaration

The information contained herein is for evaluation and reference purpose only. The incorporation of such products and information in the design of customers' products shall be done under the full responsibility of the customer.

Except as provided in Solid State System Co. Ltd. ("3S") terms and conditions of sales, 3S does not make any warranty, express or implied, including implied warranties of merchantability and fitness for a particular purpose with respect to any 3S products, and 3S does not assume any liability for infringement of patents, copyrights or other intellectual property rights of third parties by or arising from the use of 3S products or any other liability arising from the use of such products.

Notice

No part of this publication may be reproduced, photocopied, or transmitted in any form, without the prior written consent of 3S. 3S reserves the right to make change to the product specification and descriptions at any time without notice, and to discontinue or make change to its products ant any time without notice.

Please contact a 3S representative for the application note issued by 3S to design your system in a right way.

All information contained within is subject to change without any prior written notice. Copyright Protected. All rights reserved

Table of Contents

1. Product Overview 5
2. Product Features 6
3. Electric Characteristics 8
4. Pin Description 10
5. Block Diagram And Descriptions 15
6. Reference Application Circuit for LQFP48 (U6C) / QFN (Q6C) 20
7. Reference Application Circuit for QFN36 (QCC) 21
8. Package Information 22
9. Revision History 25

All information contained within is subject to change without any prior written notice. Copyright Protected. All rights reserved

Ordering Information

Part Number	Package Type
SSS1700B1-U6C	LQFP-48pin
SSS1700B1-Q6C	QFN-48pin
SSS1700B1-QCC	QFN-36pin

All information contained within is subject to change without any prior written notice. Copyright Protected. All rights reserved

1. Product Overview

SSS1700 is 3S highly integrated single chip USB audio controller with on chip oscillator to save the external 12MHz crystal component for headset application. SSS1700 features support 96 KHz 24 bit sampling rate with external audio codec(24bit/96KHz I2S In&Out) and have built-in stereo 16/24 bits ADC, stereo 16/24 bits DAC, earphone driver, five-band hardware EQ, audio PLL, USB clock oscillator, and USB FS controller plus PHY. External 24C02~24C16 EEPROM connection provides flexibility for USB VID/PID/product string, default gain settings, and other customized demands. SSS1700 provides a minimum BOM solution for featured USB audio solutions in Windows / MAC / Android OS.

All information contained within is subject to change without any prior written notice. Copyright Protected. All rights reserved

2. Product Features

- Compliant with USB specification v2.0 full speed operation
- Compliant with USB audio device class specification v1.0
- Support 44.1KHz/48KHz/96KHz、16bit/24bit sampling rate (EEPROM Option)
- Embedded digital mixer with default mixer mute after power on (control by OS)
  - when mono ADC is set, both DAC channel mixed with this single ADC data
  - when stereo ADC is set, L-ch DAC mixes with L-ch ADC data and R-ch DAC mixes with R-ch ADC data
- ROM option for power mode setting (USB bus power 100mA:default or 500mA configuration)
- Default support 16&24 bit, 48KHz sampling rate for both ADC and DAC
- Embedded earphone driving with up to 16 ohm loading driving
- ADC line in to DAC output data path option
- Embedded I2S interface (master /slave mode) for 16/24 bit CODEC DAC/ADC (EEPROM Option)
- Embedded SPDIF In&Out interface for 16/24 bit CODEC DAC/ADC (EEPROM Option)
- Embedded crystaless on chip oscillator
- Supports USB suspend/resume mode
- Embedded USB transceiver for USB interface
- For headset function, USB audio function topology has 2 input terminals, 2 output terminals, (1 mixer unit), (1 selector unit), and (3) feature units (some units can be enabled by ROM code option)
- Support one control endpoint, one isochronous out endpoint, one isochronous in endpoint, one interrupt in endpoint (HID uses interrupt in and control out)
- Alternate zero bandwidth setting for releasing playback bandwidth on USB bus when this device is inactive
- Volume up, volume down, playback mute, recording mute, next track, previous track, stop and play/pause pin for direct user control
- Volume up, volume down, playback mute, next track, previous track, stop and play/pause support
- Two wire serial bus(I2C Bus) for external MCU control
- Whole EEPROM space can be accessed via MCU
- USB HID for host control synchronization
- External serial EEPROM (24C02~24C16) interface for vendor specific USB VID, PID, product string, serial number, default gain, default EQ setting, playback/record enable, and other options
- EEPROM write function via HID or vendor specific request for mass production convenience

All information contained within is subject to change without any prior written notice. Copyright Protected. All rights reserved

SSS1700B1 USB Headset/Line-in Controller

- Preloaded VID, PID, and product string and design options with setting priority: i) external EEPROM ii) embedded ROM
- Vendor specific requests and new dummy register (10XX_10XX; where XX can be set by register write and read back for verify) for software protect
- GPIO and MCU interface register read/write via HID
- True Ground Cap-less Headphone Amplifier solution
- Support **CTIA/OMTP auto switch for TRRS Audio Jack** (EEPROM Option)
- Support AD Key detect (EEPROM Option)
- Support RGB LED (EEPROM Option)
- Support HID Keyboard (EEPROM Option)
- Support IIC initial for external Codec (EEPROM Option)
- Embedded 1.2V POR
- Embedded 5V to 3.3V (with 250mA capability) and 3.3V to 1.2V regulators for single external 5V power supply
- Embedded rotary encoder interface for volume control (EEPROM Option)
- 1.2V digital core and audio PLL operation, 3.3V USB PLL operation and ADC/DAC operation
- Compatible with Win XP, Win 7, Win 10, Mac OS, Linux OS and Android OS without additional driver

All information contained within is subject to change without any prior written notice. Copyright Protected. All rights reserved

3. Electric Characteristics

● Absolute Maximum Rating

PARAMETER	SYMBOL	VALUE	UNIT
Supply Voltage	VCC5A	-0.3 to +5.5	V
DC Input Voltage	Vin	-0.3 to +3.6	V
Operating Temperature	T_{opr}	0 to 80	^{0}C
Storage Temperature	T_{stg}	-20 to +120	^{0}C
Human Body Model ESD	HBM	4000	V
Machine Model ESD	MM	200	V

● DC Characteristics

PARAMETER	SYMBOL	MIN	TYP	MAX	UNIT
Regulation Supply Voltage	VCC5A	4.5	5	5.5	V
Regulation Output Voltage	VCC33	3.0	3.3	3.6	V
	VCC12	1.08	1.2	1.32	V
Regulation Driving Capability	REGdrv33			150	mA
	REGdrv12			100	mA
CODEC Supply Voltage	VDDCP	3.0	3.3	3.6	V
	AVDD	3.0	3.3	3.6	V
Earphone Driver Supply Voltage	HPVDD	1.48	1.65	1.8	V
	HPVSS	-1.48	-1.65	-1.8	
IO Supply Voltage	VCCIO	3.0	3.3	3.6	V
IO Input Voltage	Vin	-0.3	3.3	3.6	V
Core Supply Voltage	VCCK	1.08	1.2	1.32	V

All information contained within is subject to change without any prior written notice. Copyright Protected. All rights reserved

AC Characteristics

Headphone Output (A-Weighted)

PARAMETER	CONDITION	MIN.	TYP.	MAX.	UNIT
Pmax Output power @1% THD+N	RL = 32 Ω, VCC33A = 3.3 V	--	28	--	mW
SNR (Signal-to-noise ratio)	Idle channel	--	91	--	dB
THD+N Total harmonic distortion	1KHz @ -3dB; 32Ω load; 10mW	--	-73	--	dB

Microphone Input Characteristics

SYMBOL	PARAMETER	MIN	TYP	MAX	UNIT
AMP	Microphone gain amplification	-4.5		+21	dB
	Microphone gain Boost		+21		dB
GSTEP	ADC gain step		0.75		dB
DR	Dynamic range @ 997Hz -60dB FS gain = 0dB		89		dB
SNR	SNR @ idle channel gain = 0dB		89		dB
THD+N	THD+N @ 997Hz -3dB FS gain = 0dB		-85		dB
FS	Signal full scale input gain = 0dB		0.75*VCC33A		V

All information contained within is subject to change without any prior written notice. Copyright Protected. All rights reserved

4. Pin Description

- **Pin Out Chart for 48 Pin LQFP/QFN**

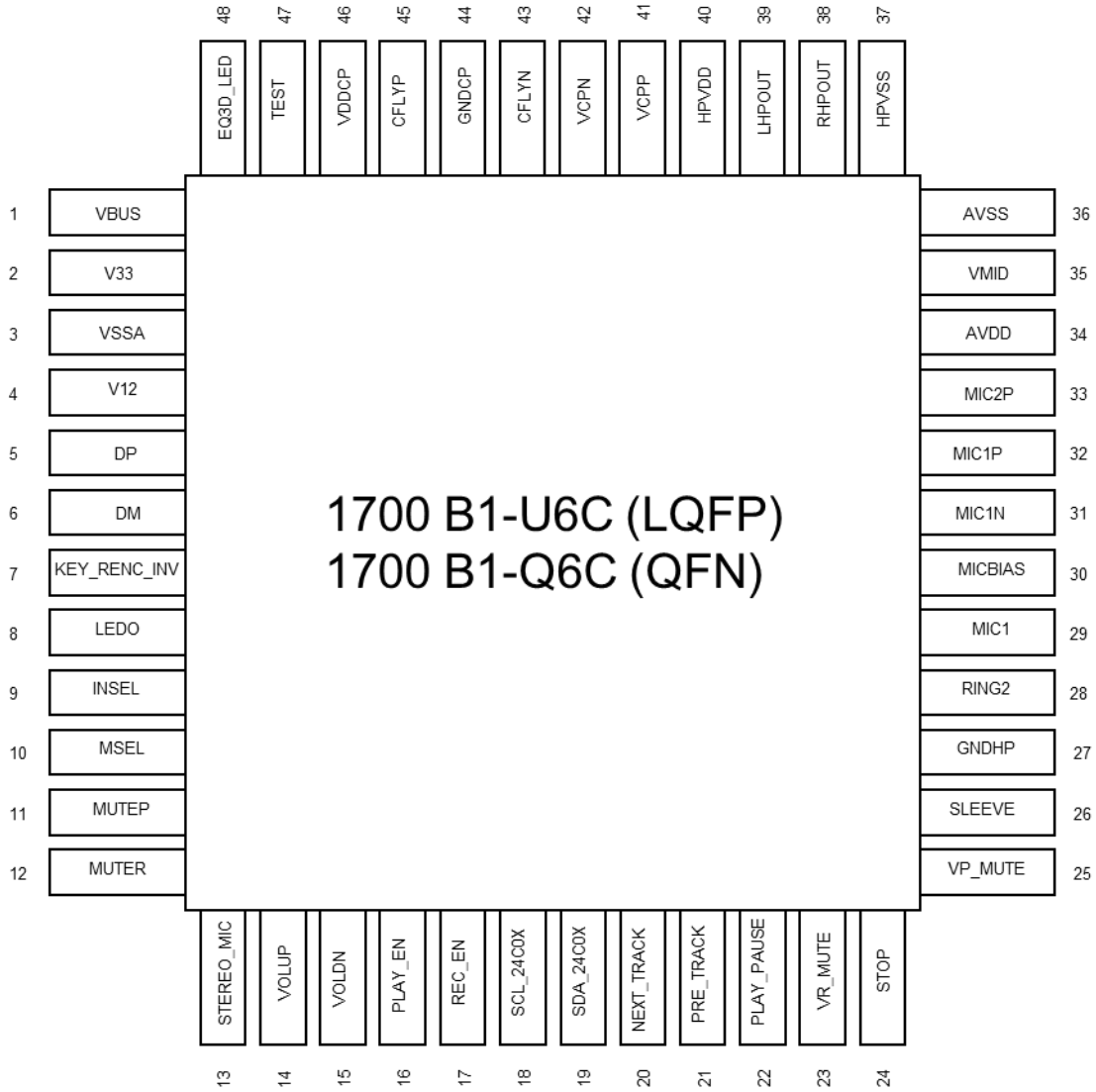

All information contained within is subject to change without any prior written notice. Copyright Protected. All rights reserved

- **Pin Out Chart for 36 Pin QFN**

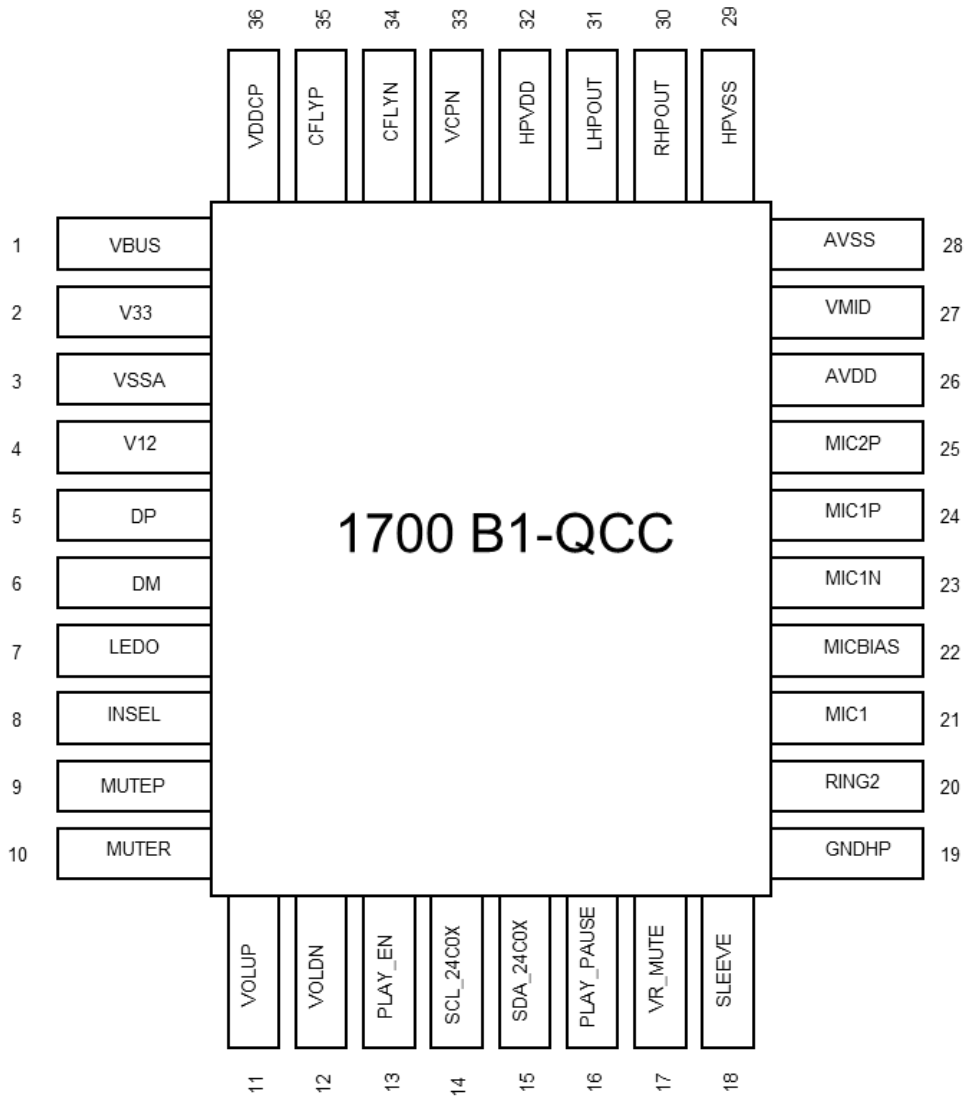

All information contained within is subject to change without any prior written notice. Copyright Protected. All rights reserved

Pin List Table

U6C/ Q6C Pin	QCC Pin	Symbol	IO Type	Normal status	Description	Mark
1	1	VBUS	P	P	5V Power input	
2	2	V33	P	P	3.3V Power output	
3	3	VSSA	P	P	Ground	
4	4	V12	P	P	1.2V Power output	
5	5	DP	AIO	AIO	USB data D+	
6	6	DM	AIO	AIO	USB data D-	
7		KEY_RENC_INV	IO,PU	I	Button & rotary encoder function change 1 : normal (HID/hardware Gain control function define in rom) 0 : function change (HID/hardware Gain control function swap)	
8	7	LEDO	IO,PD	O	LED Out (toggling for data transmit)	
9	8	INSEL	IO,PU	I	Line in mode select	
10		MSEL	IO,PU	I	Mixer enable 1: enable mixer 0: disable mixer	
11	9	MUTEP	IO,PU	I	Playback Mute	
12	10	MUTER	IO,PU	I	Record Mute	
13		STEREO_MIC	IO,PU	I	MIC Select 1:STEREO 0:MONO	
14	11	VOLUP	IO,PU	I	Volume up	
15	12	VOLDN	IO,PU	I	Volume down	
16	13	PLAY_EN	IO,PU	I	PLAY Enable option 0 : disable 1 : enable	
17		REC_EN	IO,PU	I	REC Enable option 0:disable 1:enable	
18	14	SCL_24C0X	IO,PU	O	External ROM(24C0X) serial bus clock pin	
19	15	SDA_24C0X	IO,PU	IO	External ROM(24C0X) serial bus data pin	
20		NEXT_TRACK	IO,PU	I	Next Track	
21		PRE_TRACK	IO,PU	I	Previous Track	
22	16	PLAY_PAUSE	IO,PU	I	PLAY/PAUSE	
23	17	VR_MUTE	IO,PD	O	Record mute indicator	
24		STOP	IO,PU	I	stop	

All information contained within is subject to change without any prior written notice. Copyright Protected. All rights reserved

25		VP_MUTE	IO,PD	O	Play mute indicator	
26	18	SLEEVE	Ground/Analog Input	Analog Input	Microphone or ground, connect to SLEEVE of headset jack	
27	19	GNDHP	Ground	Ground	Headphone ground connect to PCB analog ground	
28	20	RING2	Ground/Analog Input	Ground	Microphone or ground, connect to RING2 of headset jack	
29	21	MIC1	Analog Input	Analog Input	The DC input for the analog accessory detect, connect to MICBIAS with 2.2k Ohm resistance.	
30	22	MICBIAS	Analog O	Analog O	Microphone bias voltage output	
31	23	MIC1N	Analog I	Analog I	Microphone input(AC coupled)	
32	24	MIC1P	Analog I	Analog I	Microphone input(AC coupled)	
33	25	MIC2P	Analog I	Analog I	Microphone input(AC coupled)	
34	26	AVDD	P	P	Analog power supply 3.3V typ.	
35	27	VMID	Analog IO	Analog IO	Mid-rail reference decoupling point	
36	28	AVSS	P	P	Analog ground	
37	29	HPVSS	Negative Power	Negative Power	Headphone driver negative power supply -1.65V, connect to VCPN on PCB	
38	30	RHPOUT	Analog O	Analog O	Right channel headphone driver output	
39	31	LHPOUT	Analog O	Analog O	Left channel headphone driver output	
40	32	HPVDD	Power	Power	Headphone driver power supply 1.65V, connect to VCPP on PCB	
41		VCPP	Analog O	Analog O	Charge pump positive output, for headphone driver power supply.	
42	33	VCPN	Analog O	Analog O	Charge pump negative output, for headphone driver power supply.	
43	34	CFLYN	Analog O	Analog O	Charge pump flying capacitor pin	
44		GNDCP	P	P	Charge pump ground	
45	35	CFLYP	Analog O	Analog O	Charge pump flying capacitor pin	
46	36	VDDCP	P	P	Charge pump power supply	
47		TEST	I,PD	I	Test mode 0: normal 1: test mode	
48		EQ3D_LED	IO,PU	I	EQ&3D LED Out	

All information contained within is subject to change without any prior written notice. Copyright Protected. All rights reserved

※ PLAY_EN & REC_EN Function Option

PLAY_EN	*REC_EN*	*function*
0	0	Reserved for test
1	0	Play only
0	1	Record only
1	1	Play & Record (default)

※ INSEL & PATH_SEL Function Option

INSEL	*PATH_SEL*	*function*
0	0	Line in mode
0	1	Line in mode
1	0	USB mode path 0
1	1	USB mode path 1

All information contained within is subject to change without any prior written notice. Copyright Protected. All rights reserved

5. Block Diagram And Descriptions

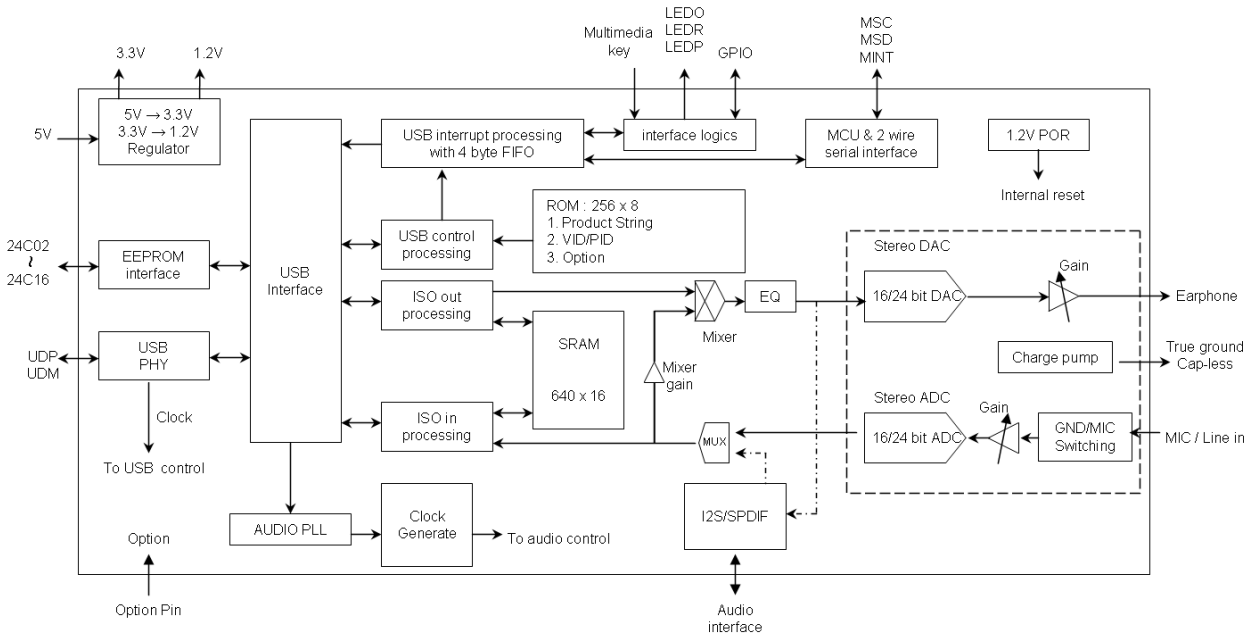

● Line in & USB mode default setting

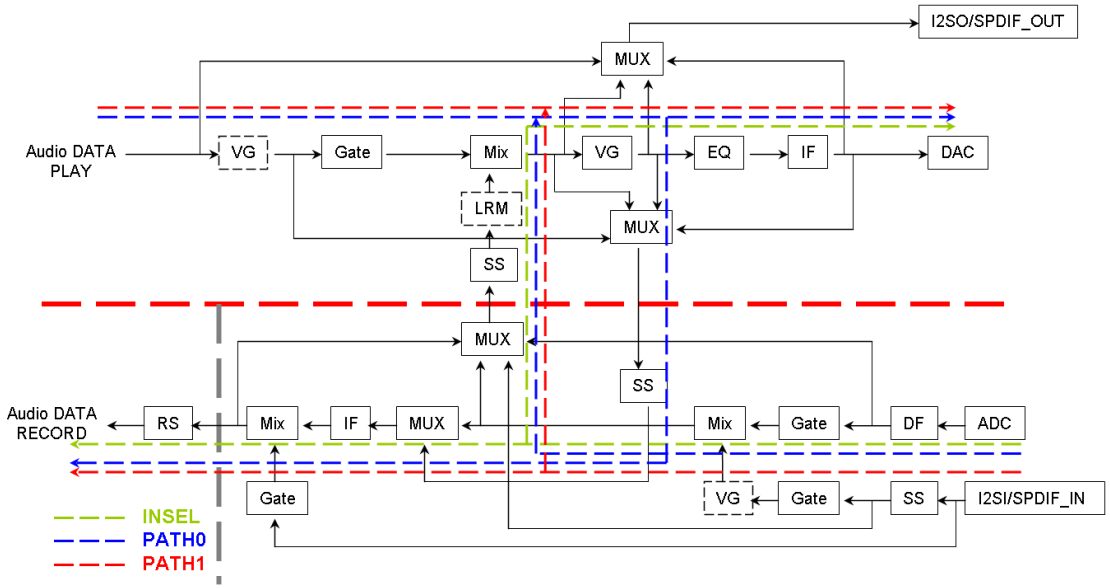

All information contained within is subject to change without any prior written notice. Copyright Protected. All rights reserved

Automatic Gain Control (AGC)

SSS1700 has AGC (Automatic Gain Control) function. It can be used to automatically adjust the output range of ADC, which can let ADC outputs remain in a stable range. AGC control schematic diagram as below, the gain adjustable range is -23dB ~ + 40dB, with each step 1dB adjusted.

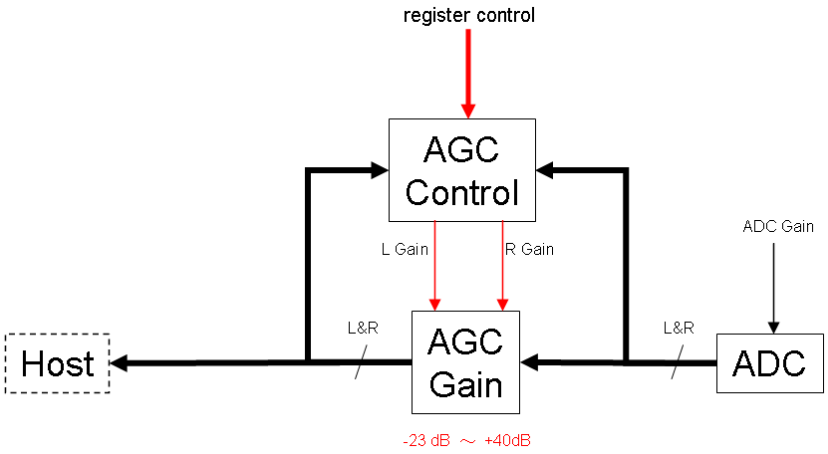

AGC parameter setting can be set in EEPROM. The control features include stability of time, error range, active manner, hold time, speed adjusting and son on, these parameters need for individual settings. Its operational diagram refers as below:

AGC tuning is targeted at within two blue lines. Shown in front of diagram, signal is below the blue line interval, then AGC amplifier the signal to the blue range. Similarly in the illustration, the signal is over the blue interval, and then AGC will down the signal to the blue range.

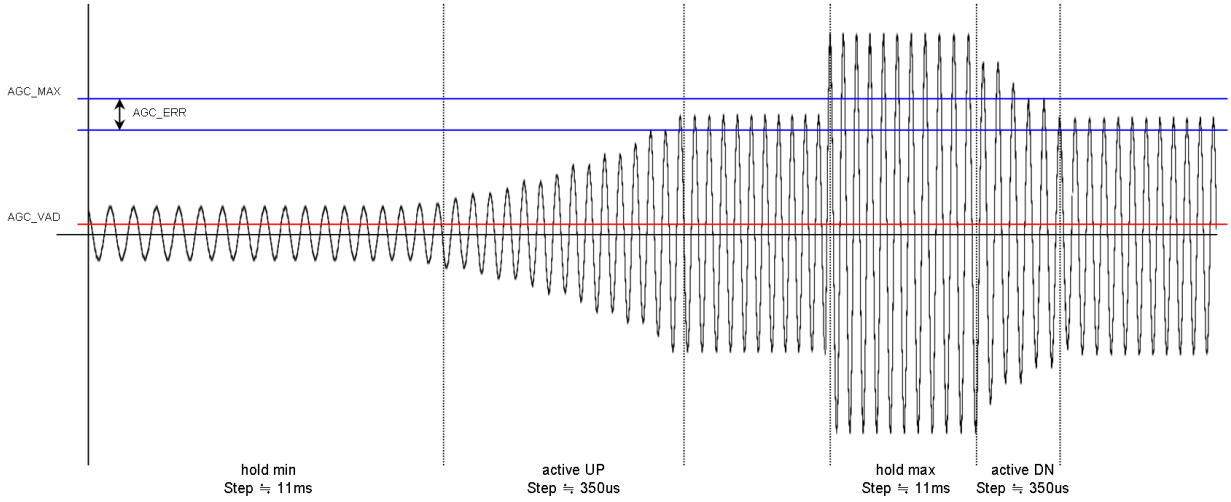

Ps : AGC function is only valid for built-in ADC of SSS1700

All information contained within is subject to change without any prior written notice. Copyright Protected. All rights reserved

● MULTI FUNCTION KEY (4 Key)

SSS1700 support maximum 4 multifunction keys. By EEPROM settings, each multifunction key can have up to four different button operation manners. Four kinds of different button operation are "a short press", "consecutive two short press", "a short and a long press" and "a long press". Each multifunction key corresponds to different control manner for different function demand, so that can achieve the purpose of streamlining the key number of requirements. Setting diagram is as follows:

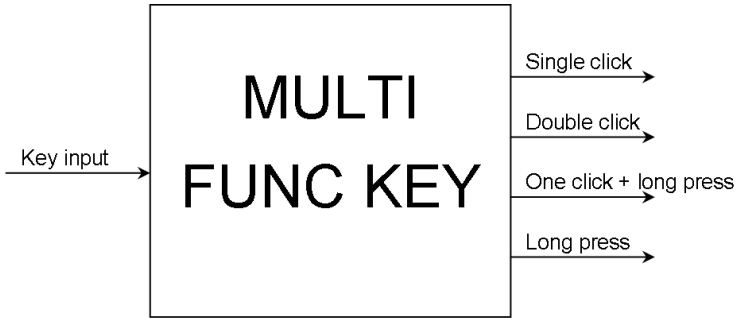

Key input can be set from :

ON.	Key input
1	VOLUP_IN
2	VOLDN_IN
3	MUTEP_IN
4	MUTER_IN
5	NEXT_TRACK_IN
6	PRE_TRACK_IN
7	STOP_IN
8	PLAY_PAUSE_IN
9	EQ_NEXT_IN
10	USER_KEY_IN
11	GPI5
12	GPI6
13	GPI7
14	GPI8
15	GPI9

Function output can be assign to :

ON.	Function output
1	VOLUP
2	VOLDN
3	MUTEP
4	MUTER
5	NEXT_TRACK
6	PRE_TRACK
7	STOP
8	PLAY_PAUSE
9	EQ_NEXT
10	USER_KEY
11	S3D_NEXT
12	GPO9
13	GPO8
14	GPO7
15	GPO6
16	GPO5

All information contained within is subject to change without any prior written notice. Copyright Protected. All rights reserved

LED FLASH

SSS1700 has the function of stereo audio wave gradient indicator. By EEPROM settings, can provide up to six indication signals (the difference between L/R, for each channel share three indication signals). Indication signal can be connected to LED to be audio output gradient indicator. When the audio signal is zero, the LEDs can be set for as breathing lights to increase product diversity.
The following is a functional diagram:

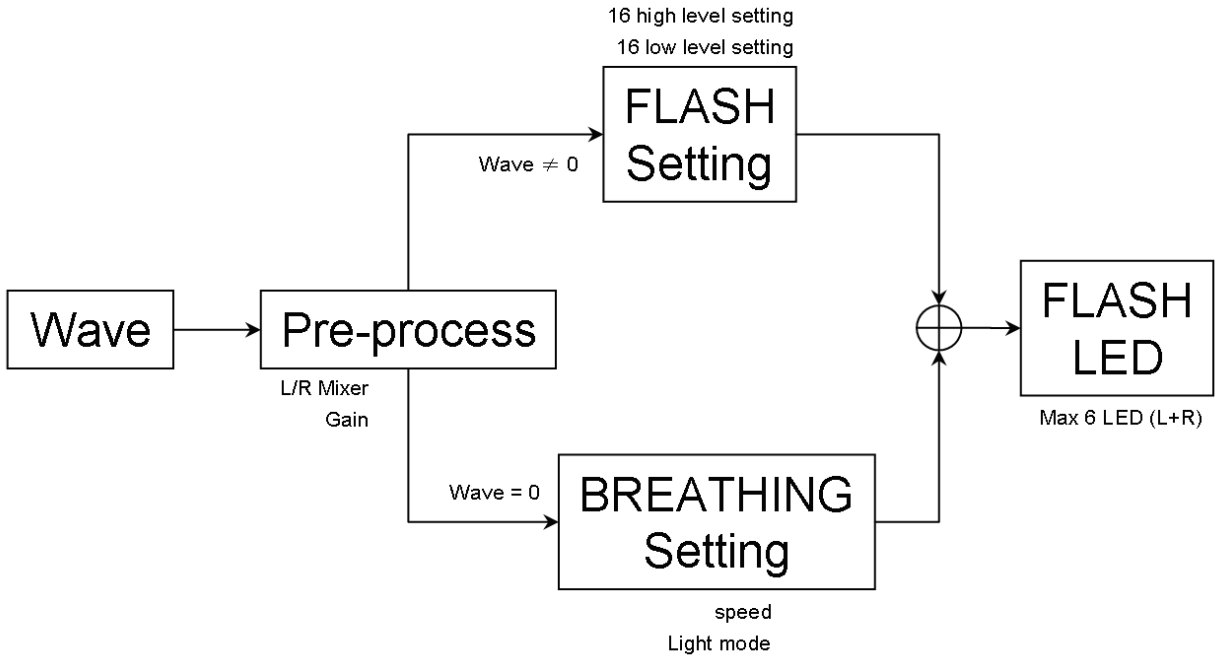

When setting for audio output indicator, it can be adjusted in accordance with the desired output range; each indicator signals can have 16 levels to do proposed audio settings.

All information contained within is subject to change without any prior written notice. Copyright Protected. All rights reserved

● Five-band Equalizer

SSS1700 on playback path built 5 Band EQ functions to provide user to make sound effect adjustment. These frequencies of five-band EQ are fixed at 60Hz, 300Hz, 1.2KHz, 3.6KHz and 12KHz, respectively. Gain can be set for each band is + 12dB ~ -∞dB, as follows:

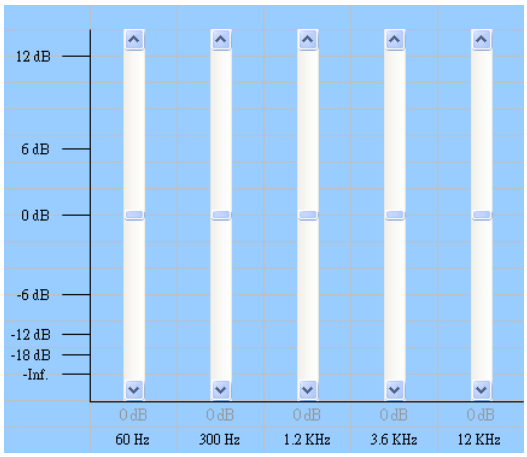

User can adjust a variety of sound effects according to requirement; the results will be stored in EEPROM after adjustment, and it can use single button to change different sound effect in cycle approach, simultaneously, also provide a single LED for indication of ON/OFF sound effect. By default, SSS1700 built-in a subwoofer sound settings, therefore, under no external EEPROM case, there is still an EQ sound transformation for user. Preset bass (SUBWOOFER) sound settings are as follows:

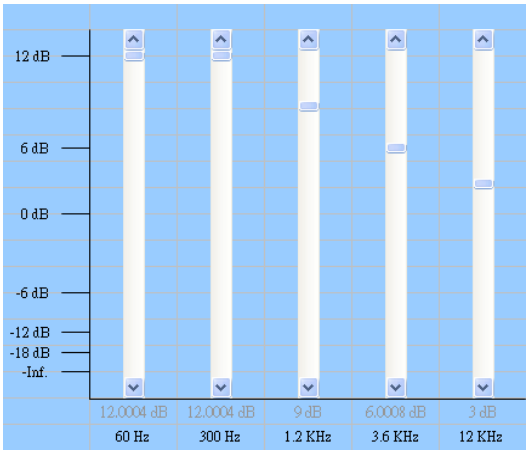

All information contained within is subject to change without any prior written notice. Copyright Protected. All rights reserved

6. Reference Application Circuit for LQFP48 (U6C) / QFN (Q6C)

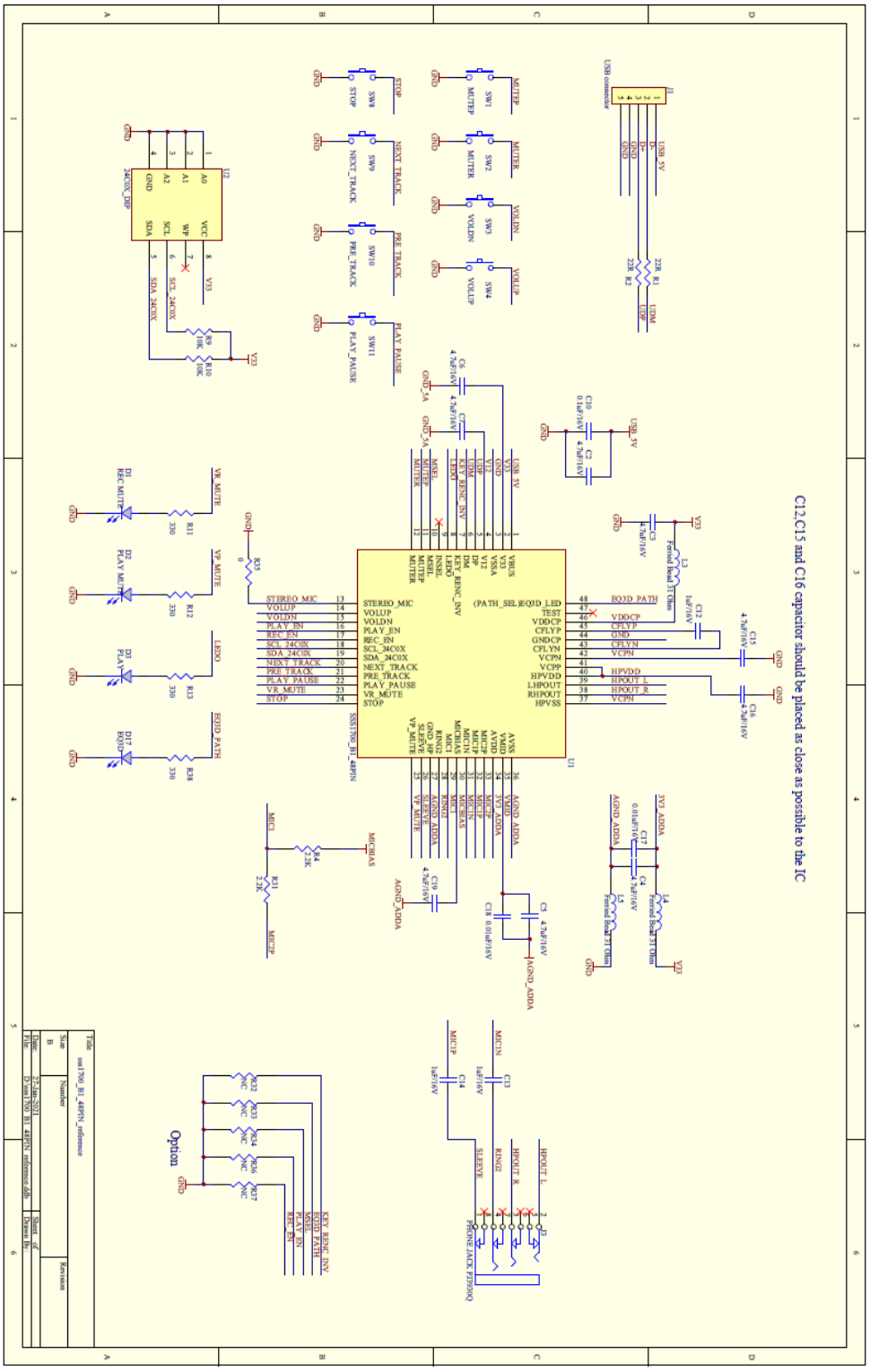

All information contained within is subject to change without any prior written notice. Copyright Protected. All rights reserved

7. Reference Application Circuit for QFN36 (QCC)

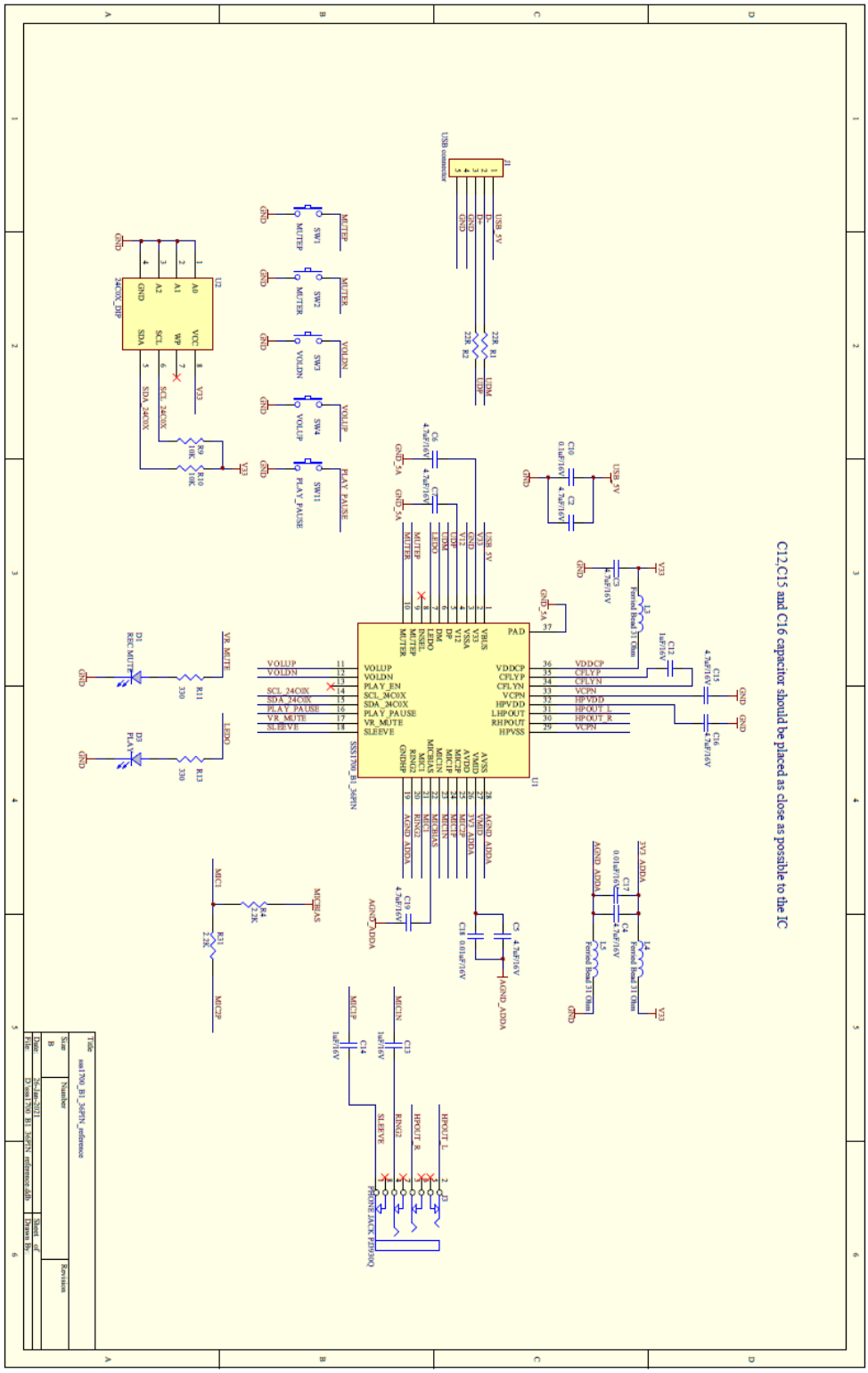

All information contained within is subject to change without any prior written notice. Copyright Protected. All rights reserved

8. Package Information

- **LQFP 48**

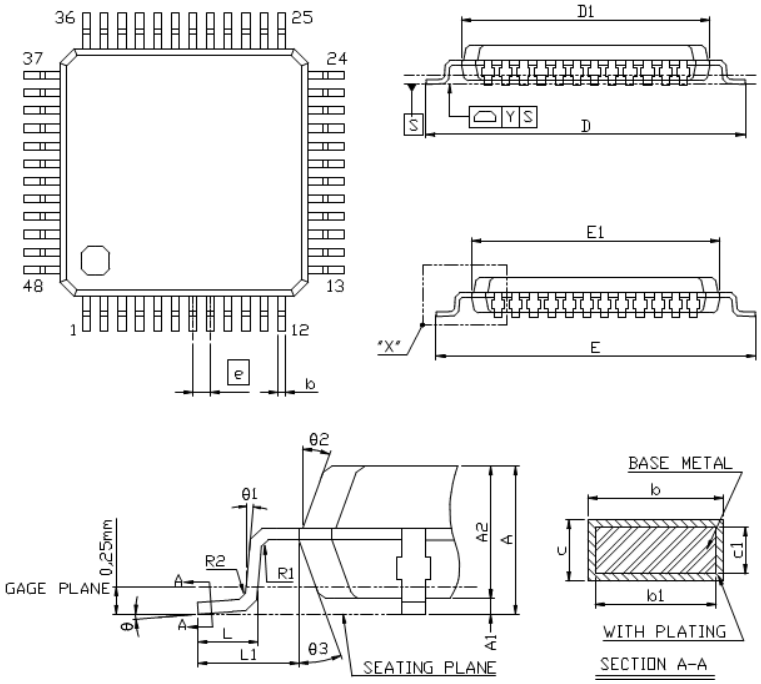

SYMBOL	DIMENSION (MM)			DIMENSION (MIL)		
	MIN.	NOM.	MAX.	MIN.	NOM.	MAX.
A			1.60			63.0
A1	0.05	0.10	0.15	2.0	3.9	5.9
A2	1.35	1.40	1.45	53.1	55.1	57.1
b	0.17	0.22	0.27	6.7	8.7	10.6
b1	0.17	0.20	0.23	6.7	7.9	9.1
c	0.09		0.20	3.5		7.9
c1	0.09		0.16	3.5		6.3
D	8.90	9.00	9.10	350.4	354.3	358.3
D1	6.90	7.00	7.10	271.7	275.6	279.5
E	8.90	9.00	9.10	350.4	354.3	358.3
E1	6.90	7.00	7.10	271.7	275.6	279.5
e	0.45	0.50	0.55	17.7	19.7	21.7
L	0.50	0.60	0.70	19.7	23.6	27.6
L1	0.85	1.00	1.15	33.5	39.4	45.3
R1	0.08			3.1		
R2	0.08		0.20	3.1		7.9
Y			0.08			3.1
θ	0°	3.5°	7°	0°	3.5°	7°
θ1	0°			0°		
θ2	11°	12°	13°	11°	12°	13°
θ3	11°	12°	13°	11°	12°	13°

NOTE:
1.REFER TO JEDEC MS-026 (ISSUE D) / BBC
2.DIMENSION D1 AND E1 DO NOT INCLUDE MOLD PROTRUSION.
ALLOWABLE PROTRUSION IS 0.25mm PER SIDE D1 AND E1 ARE
MAXIMUM PLASTIC BODY SIZE DIMENSION INCLUDING MOLD MISMATCH.
3.DIMENSION b DOES NOT INCLUDE DAMBAR PROTRUSION. ALLOWABLE
DAMBAR PROTRUSION SHALL NOT CAUSE THE LEAD WIDTH TO EXCEED
THE MAXIMUM b DIMENSION BY MORE THAN 0.08mm.
4.ALL DIMENSIONS ARE IN MILLIMETERS.
5.DIMENSION CONVERSION FACTOR : 1mm=39.37mil

All information contained within is subject to change without any prior written notice. Copyright Protected. All rights reserved

- **QFN 48**

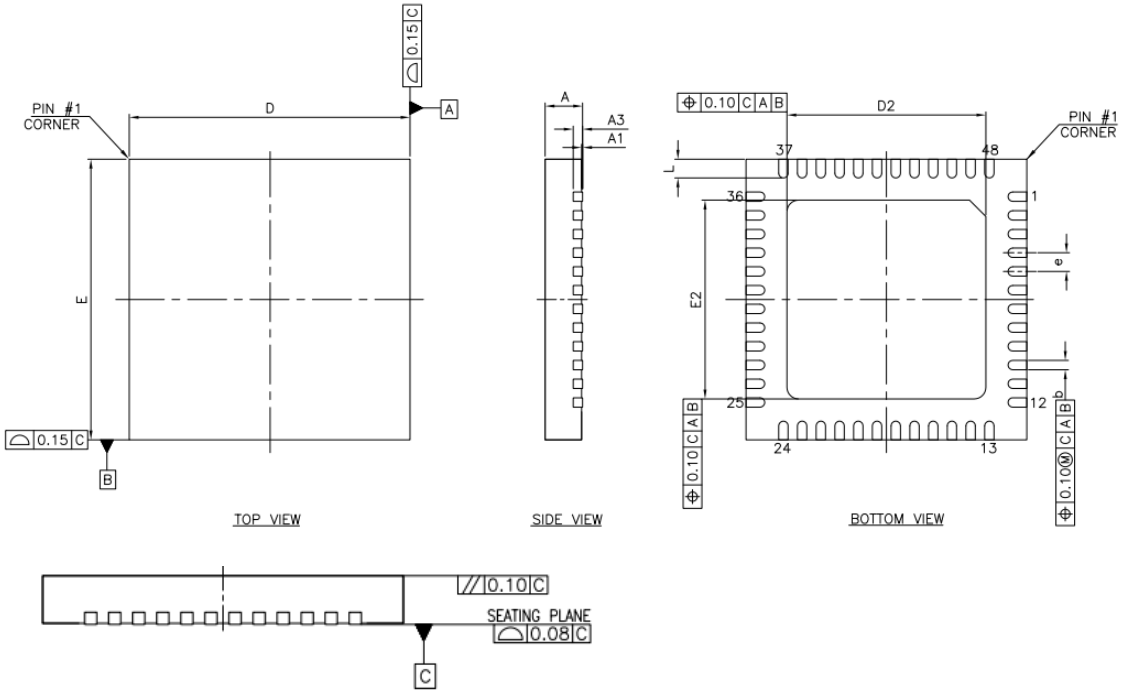

	SYMBOL	MIN.	NOM	MAX.	MIN.	NOM	MAX.
Total thickness	A	0.70	0.75	0.80	0.60	0.65	0.70
Standoff	A1	0.00	0.02	0.05	0.00	0.02	0.05
Lead thickness	A3	0.20 REF.			0.20 REF.		
Body size	D	5.90	6.00	6.10	5.90	6.00	6.10
	E	5.90	6.00	6.10	5.90	6.00	6.10

Pad size	Lead width b			Exposed pad width D2			Exposed pad length E2			Lead pitch e	Lead length L			LEAD FINISH	
	MIN.	NOM	MAX.	MIN.	NOM	MAX.	MIN.	NOM	MAX.		MIN.	NOM	MAX.	Pure Tin	PPF
189x189MIL	0.15	0.20	0.25	4.15	4.25	4.35	4.15	4.25	4.35	0.40 BSC	0.30	0.40	0.50	V	X

All information contained within is subject to change without any prior written notice. Copyright Protected. All rights reserved

QFN36

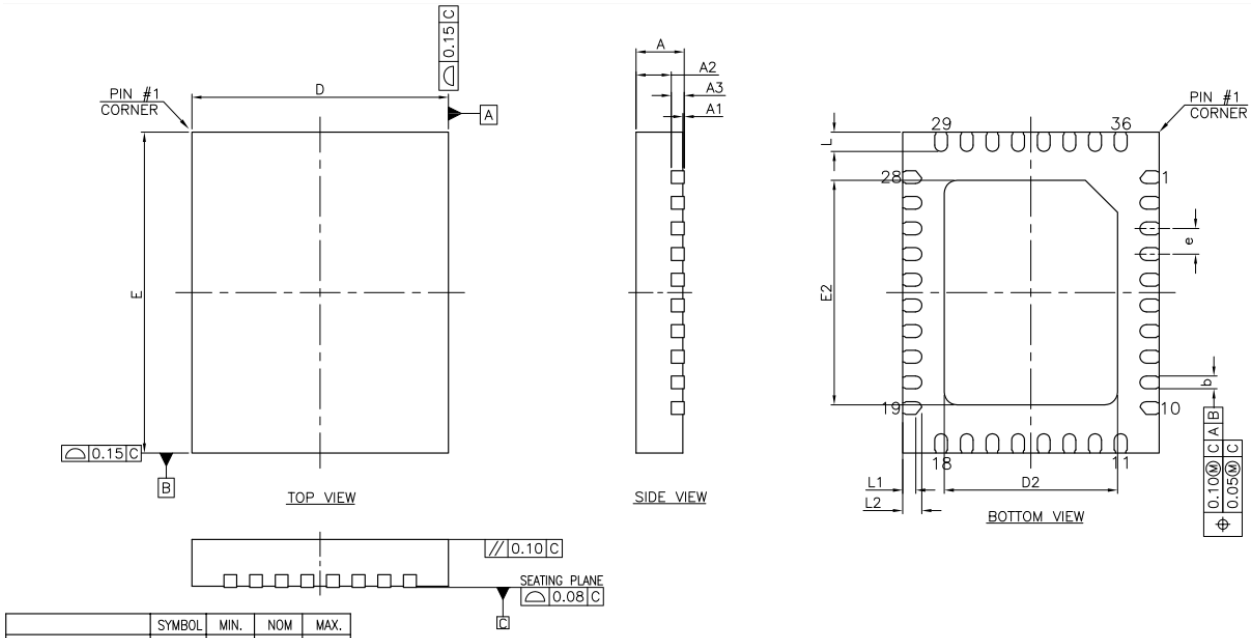

	SYMBOL	MIN.	NOM	MAX.
Total thickness	A	0.70	0.75	0.80
Standoff	A1	0.00	0.02	0.05
Mold thickness	A2	0.50	0.55	0.60
Lead thickness	A3	0.20 REF.		
Body size	D	3.95	4.00	4.05
	E	4.95	5.00	5.05
Lead width	b	0.15	0.20	0.25
Exposed pad width	D2	2.65	2.70	2.75
Exposed pad length	E2	3.45	3.50	3.55
Lead pitch	e	0.40 BSC		
Lead length	L	0.25	0.30	0.35
	L1	–	0.20	–
	L2	–	0.29	–
Lead count	N	36L		

All information contained within is subject to change without any prior written notice. Copyright Protected. All rights reserved

9. Revision History

Revision	Date	Description
0.1	2021/01/26	Initial Specification

All information contained within is subject to change without any prior written notice. Copyright Protected. All rights reserved