

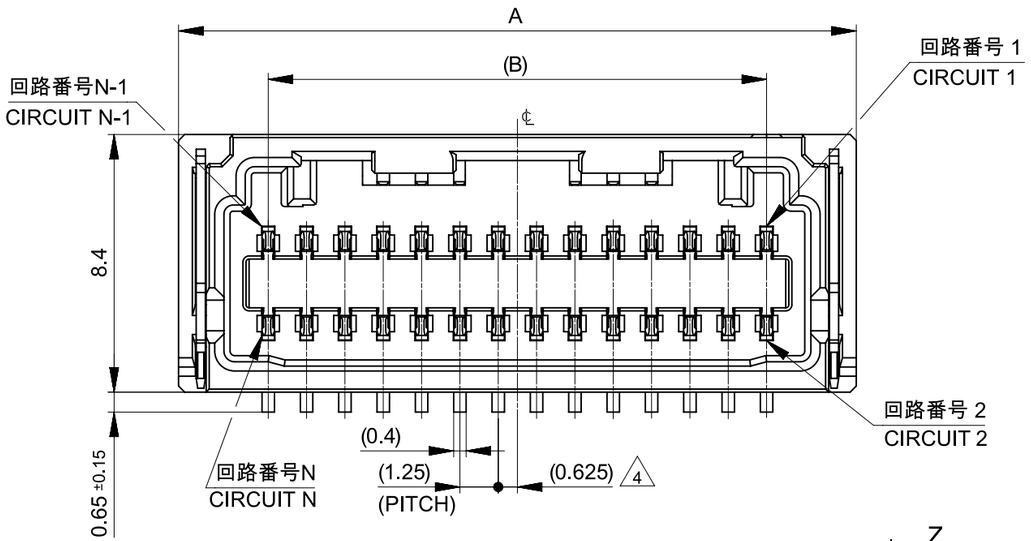

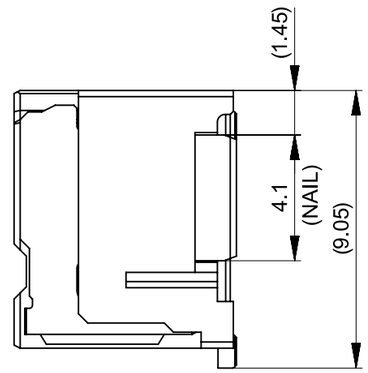

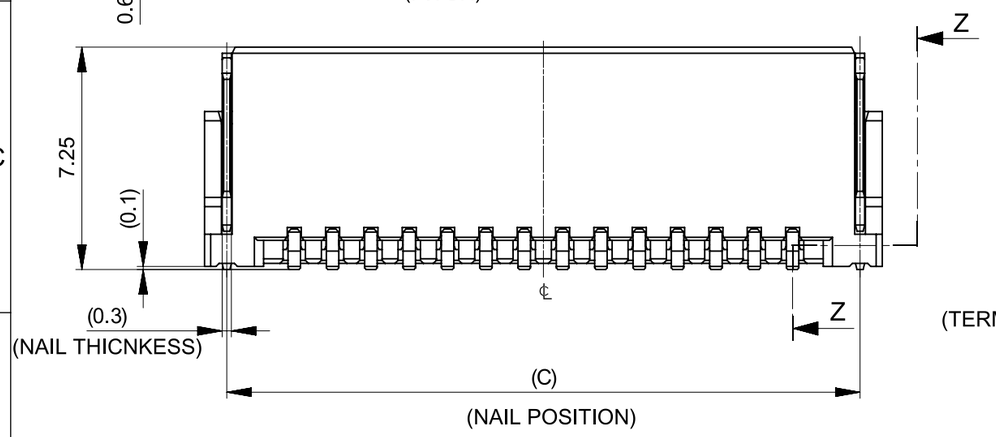

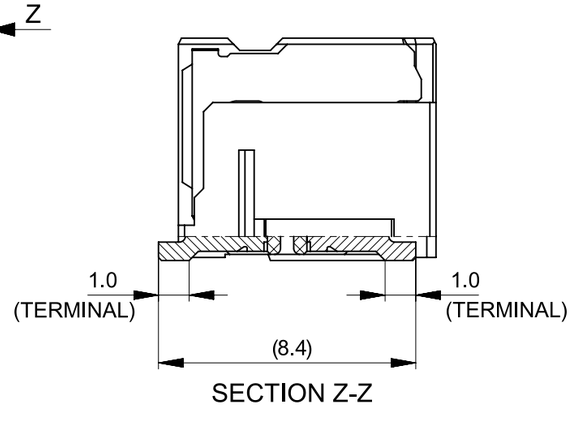

注記：
NOTES :

1. 材料及び仕上げ(めっき仕様)：TABLE 1, TABLE2 参照
   MATERIAL AND FINISHES (PLATING SPECIFICATION) : SEE TABLE 1, TABLE2.
2. 製品仕様書、コネクタ取扱説明書、適合嵌合相手、適合リテーナーはSHEET 5をご参照下さい。
   PLEASE REFER TO SHEET 5 FOR PRODUCT SPECIFICATION, APPLICATION SPECIFICATION, MATE WITH AND APPLICABLE RETAINER.
3. 端子テール部 及び ネイルの平坦度：0.12 MAXIMUM
   TAIL AND NAIL COPLANARITY TO BE 0.12 MAXIMUM
4. 極数／2 = 偶数に適合
   APPLY TO CIRCUIT SIZE / 2 = EVEN.
5. 発注番号：SHEET 5 参照
   ORDER NUMBER : PLEASE REFER TO SHEET 5

505433****

極数 CIRCUIT SIZE

番号 NO.	カバーテープ COVER TAPE
7	無 WITHOUT
8	有 WITH

番号 NO.	ハウジングカラー HOUSING COLOR
0	ナチュラル(ベージュ) NATURAL(BEIGE)
1	黒 BLACK
2	赤 RED
4	青 BLUE
6	緑 GREEN

29.4	25	30.85	42
28.15	23.75	29.6	40
26.9	22.5	28.35	38
25.65	21.25	27.1	36
24.4	20	25.85	34
23.15	18.75	24.6	32
21.9	17.5	23.35	30
20.65	16.25	22.1	28
19.4	15	20.85	26
18.15	13.75	19.6	24
16.9	12.5	18.35	22
15.65	11.25	17.1	20
14.4	10	15.85	18
13.15	8.75	14.6	16
11.9	7.5	13.35	14
10.65	6.25	12.1	12
9.4	5	10.85	10
8.15	3.75	9.6	8
C	B	A	極数 CIRCUIT SIZE

1 TABLE 1

番号 NO.	部品 PART	材質 MATERIAL
①	ハウジング HOUSING	ポリアミド(PA), UL94V-0, 色：SHEET 5参照 POLY AMIDE(PA), UL94V-0, COLOR : SEE SHEET 5
② ③	ターミナル 及び ネイル TERMINAL AND NAIL	黄銅 BRASS
		錫ビスマスめっき：1.0 MICROMETER MINIMUM TIN-BISMUTH PLATING
		ニッケルめっき（下地）：1.0 MICROMETER MINIMUM NICKEL (UNDER PLATING)
④	カバーテープ COVER TAPE	ポリイミド POLYIMIDE

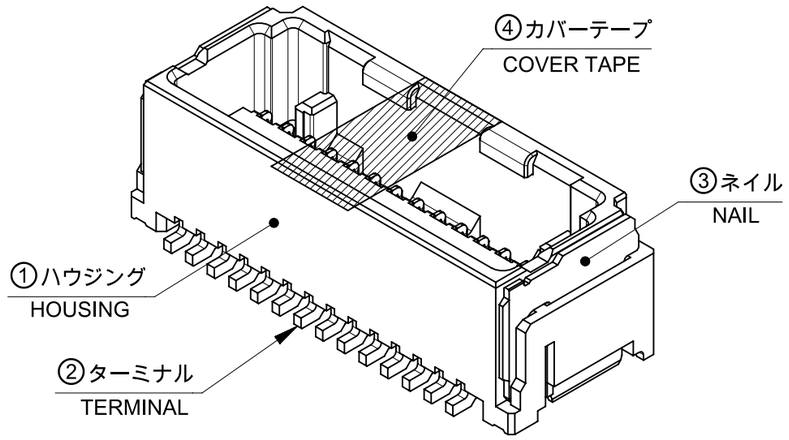

THIS DRAWING CONTAINS INFORMATION THAT IS PROPRIETARY TO MOLEX ELECTRONIC TECHNOLOGIES, LLC AND SHOULD NOT BE USED WITHOUT WRITTEN PERMISSION

DIMENSION UNITS	SCALE
mm	NTS

GENERAL TOLERANCES (UNLESS SPECIFIED)

ANGULAR TOL	± 3°
4 PLACES	± 0.20000
3 PLACES	± 0.2000
2 PLACES	± 0.200
1 PLACE	± 0.20
0 PLACES	± 0.20

DRAFT WHERE APPLICABLE MUST REMAIN WITHIN DIMENSIONS

CURRENT REV DESC: REMOVED OBSOLETED PART NUMBER AS PER PCN #516676

STATUS: Production
DRWN: Pranav Arunkumar 2026-04-28
CHK'D: Ganesh Rao B 2026-05-06
APPR: Gurunandan GA 2026-05-06

THIRD ANGLE PROJECTION | DRAWING: A3-SIZE | SERIES: 505433

molex

MICRO-LOCK PLUS 1.25 W/B
DUAL ROW VERTICAL SMT PLUG ASSEMBLY
TIN-BISMUTH PLATING

PRODUCT CUSTOMER DRAWING

DOCUMENT NUMBER	DOC TYPE	DOC PART	REVISION
5054330000	PSD	000	E2

MATERIAL NUMBER	CUSTOMER	SHEET NUMBER
SEE CHART	GENERAL	1 OF 5

製品形状
PRODUCT SHAPE

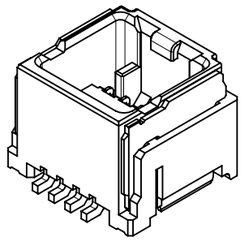

8-14極
8-14 CIRCUIT

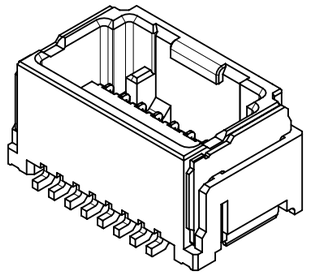

16-24極
16-24 CIRCUIT

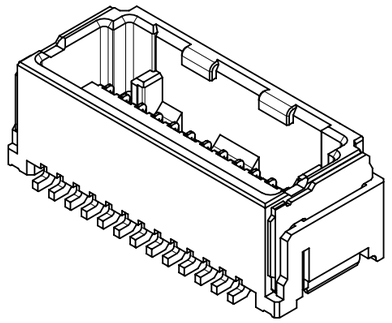

26-32極
26-32 CIRCUIT

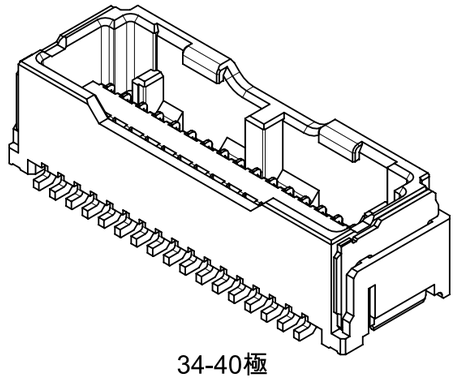

34-40極
34-40 CIRCUIT

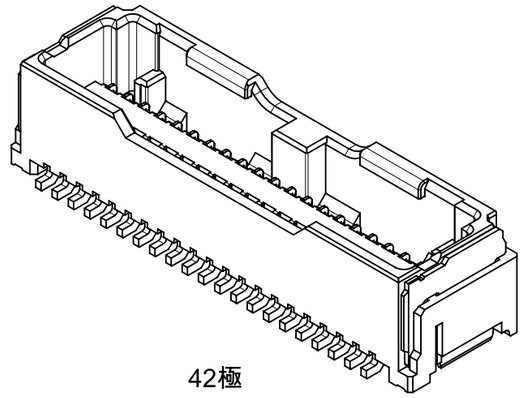

42極
42 CIRCUIT

基板パターンレイアウト
PCB PATTERN LAYOUT

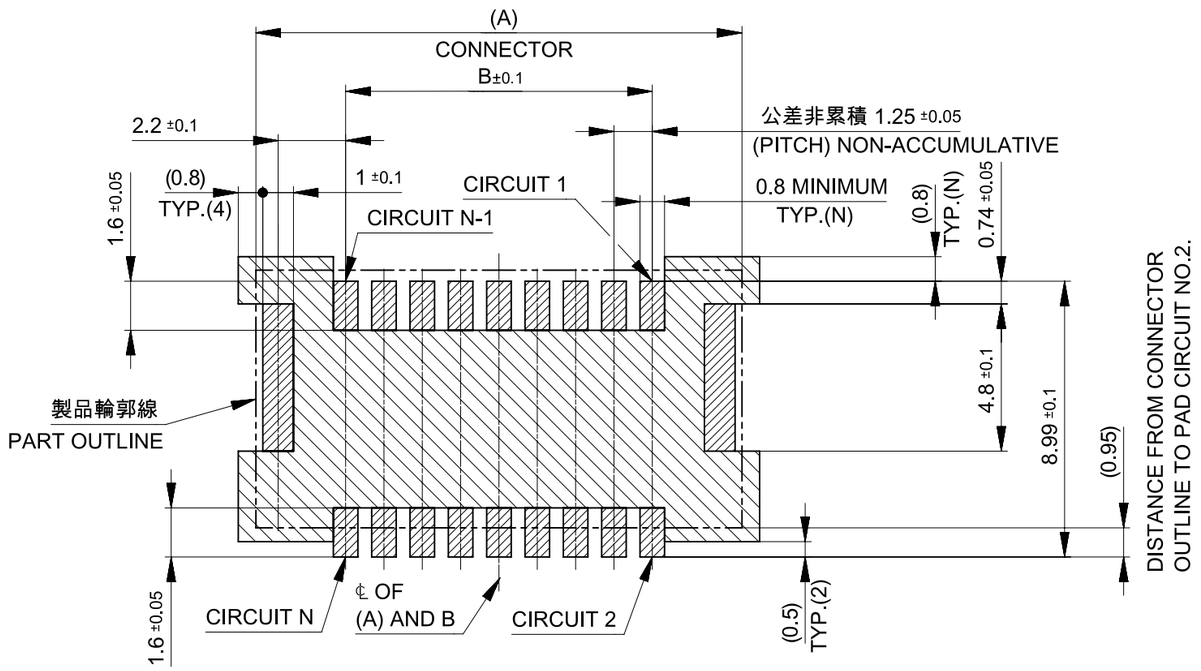

基板パターンレイアウト（参考）
(参考：基板厚 1.6mm, メタルマスク厚さ 0.15mm, マスク開口率 100%)
RECOMMEND PCB LAYOUT : COMPONENT SIDE
(REFERENCE : PCB THICKNESS 1.6mm, STENCIL THICKNESS 0.15mm, APERTURE RATIO 100%)

パターン非推奨エリア
パターンを引き回す際は、製品機能に影響がないことをご確認ください。
PATTERN IS NOT RECOMMENDED ON THE HATCHING AREA
PLEASE CHECK NOT TO HAVE PROBLEM FOR PRODUCT FUNCTION
WHEN SETTING PATTERN ON THE HATCHING AREA.

THIS DRAWING CONTAINS INFORMATION THAT IS PROPRIETARY TO MOLEX ELECTRONIC TECHNOLOGIES, LLC AND SHOULD NOT BE USED WITHOUT WRITTEN PERMISSION

DIMENSION UNITS	SCALE
mm	NTS

GENERAL TOLERANCES (UNLESS SPECIFIED)

ANGULAR TOL	± 3°
4 PLACES	± 0.20000
3 PLACES	± 0.2000
2 PLACES	± 0.200
1 PLACE	± 0.20
0 PLACES	± 0.20

DRAFT WHERE APPLICABLE MUST REMAIN WITHIN DIMENSIONS

CURRENT REV DESC: REMOVED OBSOLETED PART NUMBER AS PER PCN #516676

STATUS: Production
DRWN: Pranav Arunkumar 2026-04-28
CHK'D: Ganesh Rao B 2026-05-06
APPR: Gurunandan GA 2026-05-06

molex

MICRO-LOCK PLUS 1.25 W/B
DUAL ROW VERTICAL SMT PLUG ASSEMBLY
TIN-BISMUTH PLATING

PRODUCT CUSTOMER DRAWING

DOCUMENT NUMBER	DOC TYPE	DOC PART	REVISION
5054330000	PSD	000	E2

THIRD ANGLE PROJECTION	DRAWING	SERIES	MATERIAL NUMBER	CUSTOMER	SHEET NUMBER
	A3-SIZE	505433	SEE CHART	GENERAL	2 OF 5

吸着エリア違い
SUCTION AREA DIFFERNECE

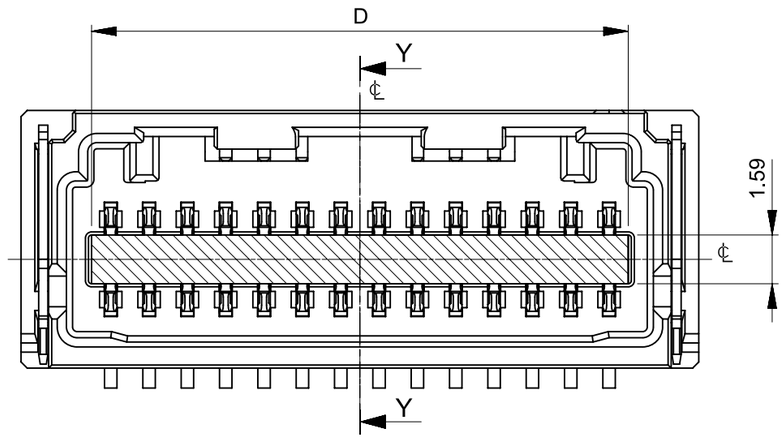

505433 **7*
カバーテープ無し
WITHOUT COVER TAPE

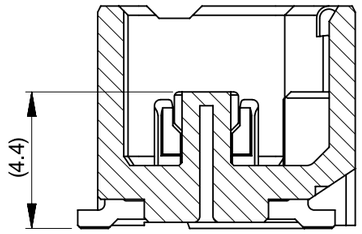

SECTION Y-Y
吸着高さ SUCTION HEIGHT

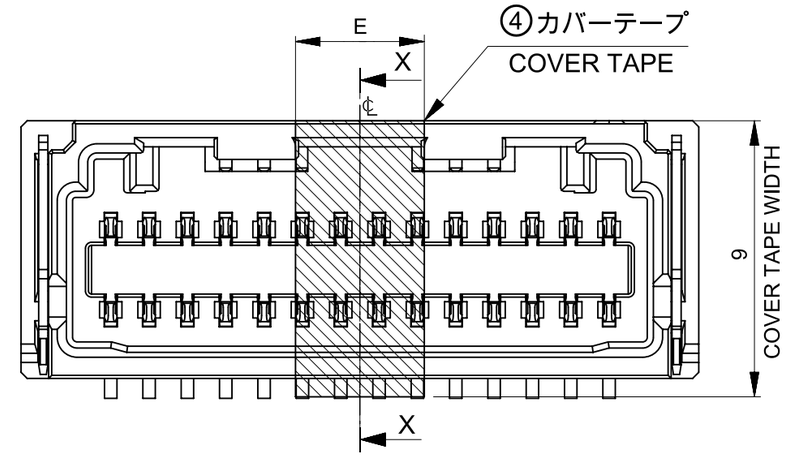

505433 **8*
カバーテープ有り
WITH COVER TAPE

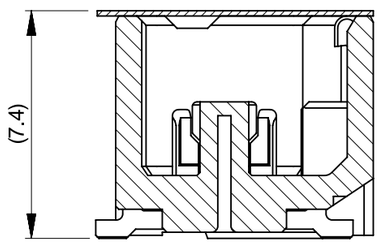

8-32極
8-32 CIRCUIT

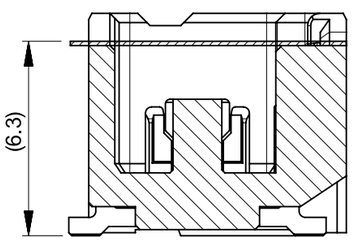

34-42極
34-42 CIRCUIT

SECTION X-X
吸着テープ高さ COVER TAPE HEIGHT

E	D	極数 CIRCUIT SIZE
4.2	5	8
	6.25	10
	7.5	12
	8.75	14
	10	16
	11.25	18
	12.5	20
	13.75	22
	15	24
	16.25	26
	17.5	28
	18.75	30
	20	32
	21.25	34
	22.5	36
	23.75	38
	25	40
	26.25	42

THIS DRAWING CONTAINS INFORMATION THAT IS PROPRIETARY TO MOLEX ELECTRONIC TECHNOLOGIES, LLC AND SHOULD NOT BE USED WITHOUT WRITTEN PERMISSION

DIMENSION UNITS	SCALE
mm	NTS

GENERAL TOLERANCES (UNLESS SPECIFIED)

ANGULAR TOL	± 3°
4 PLACES	± 0.20000
3 PLACES	± 0.2000
2 PLACES	± 0.200
1 PLACE	± 0.20
0 PLACES	± 0.20

DRAFT WHERE APPLICABLE MUST REMAIN WITHIN DIMENSIONS

CURRENT REV DESC: REMOVED OBSOLETED PART NUMBER AS PER PCN #516676

STATUS: Production
DRWN: Pranav Arunkumar 2026-04-28
CHK'D: Ganesh Rao B 2026-05-06
APPR: Gurunandan GA 2026-05-06

molex

MICRO-LOCK PLUS 1.25 W/B
DUAL ROW VERTICAL SMT PLUG ASSEMBLY
TIN-BISMUTH PLATING

PRODUCT CUSTOMER DRAWING

DOCUMENT NUMBER	DOC TYPE	DOC PART	REVISION
5054330000	PSD	000	E2

THIRD ANGLE PROJECTION	DRAWING	SERIES	MATERIAL NUMBER	CUSTOMER	SHEET NUMBER
	A3-SIZE	505433	SEE CHART	GENERAL	3 OF 5

FORMAT: TC-0000-A3
REVISION: B
DATE: 2022/08/01

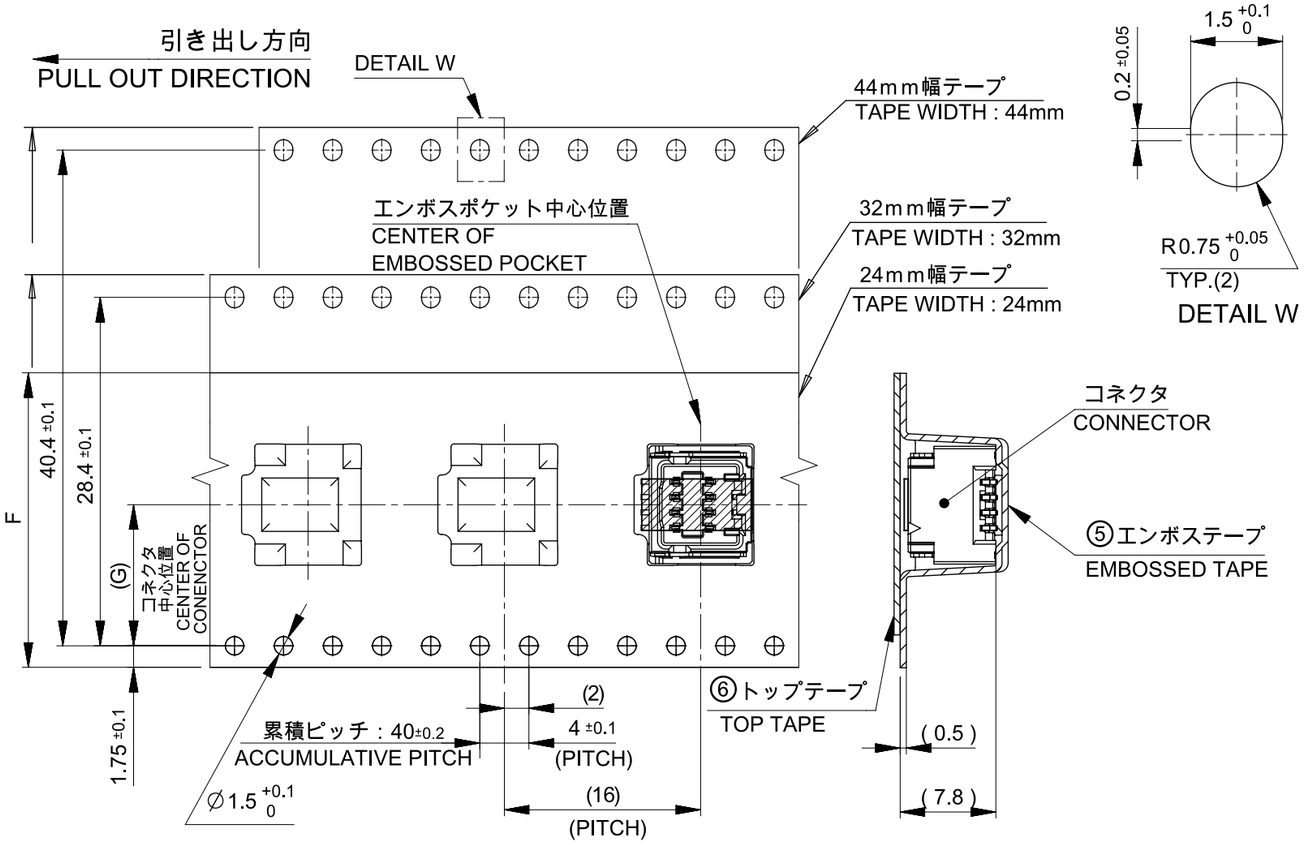

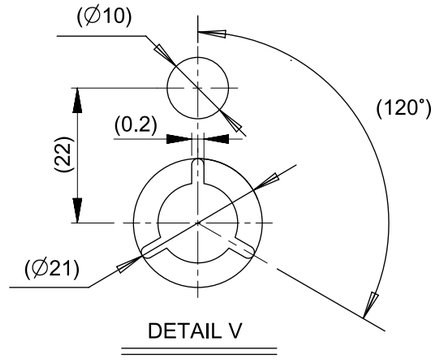

NOTES

6. 梱包数量　：　500個
   NUMBER OF CONNECTIORS : 500 PIECES/REEL.
7. リードテープ長さ
   LEAD TAPE LENGTH

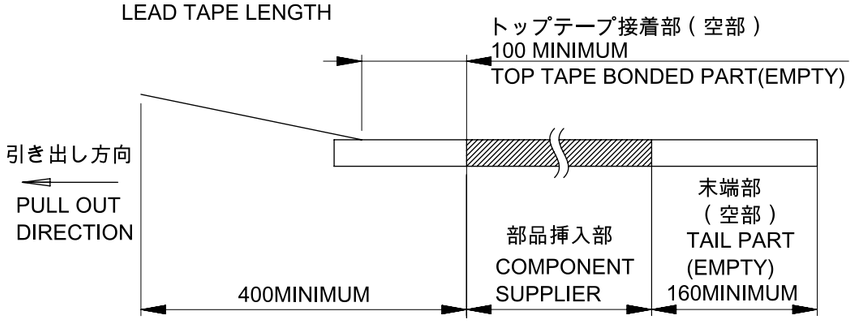

8. トップテープの剥離強度については、IEC60286-3に準拠
   TOP TAPE PEEL FORCE IS DEFINED BY IEC 60286-3.

1 TABLE 2

番号 NO.	部品 PART	材質 MATERIAL
⑤	エンボステープ EMBOSSED TAPE	ポリスチレン(PS) POLYSTYRENE(PS)
⑥	トップテープ TOP TAPE	ポリエチレン(PE)、その他 POLYETHYLENE(PE), OTHER
⑦	リール REEL	ポリスチレン(PS)＜リサイクル材を含む＞ POLYSTYRENE(PS)＜RECYCLE MATERIAL CONTAINED＞

J	H	G	F	極数 CIRCUIT SIZE
49.4	45.4	20.2	44 ±0.3	42
				40
				38
				36
				34
				32
				30
				28
				26
37.4	33.4	14.2	32 ±0.3	24
				22
				20
				18
				16
29.4	25.4	11.5	24 +0.3 -0.1	14
				12
				10
				8

THIS DRAWING CONTAINS INFORMATION THAT IS PROPRIETARY TO MOLEX ELECTRONIC TECHNOLOGIES, LLC AND SHOULD NOT BE USED WITHOUT WRITTEN PERMISSION

DIMENSION UNITS	SCALE
mm	NTS

GENERAL TOLERANCES (UNLESS SPECIFIED)

ANGULAR TOL	± 3°
4 PLACES	± 0.20000
3 PLACES	± 0.2000
2 PLACES	± 0.200
1 PLACE	± 0.20
0 PLACES	± 0.20

DRAFT WHERE APPLICABLE MUST REMAIN WITHIN DIMENSIONS

CURRENT REV DESC: REMOVED OBSOLETED PART NUMBER AS PER PCN #516676

STATUS: Production

DRWN:	Pranav Arunkumar	2026-04-28
CHK'D:	Ganesh Rao B	2026-05-06
APPR:	Gurunandan GA	2026-05-06

THIRD ANGLE PROJECTION | DRAWING: A3-SIZE | SERIES: 505433

molex

MICRO-LOCK PLUS 1.25 W/B
DUAL ROW VERTICAL SMT PLUG ASSEMBLY
TIN-BISMUTH PLATING

PRODUCT CUSTOMER DRAWING

DOCUMENT NUMBER	DOC TYPE	DOC PART	REVISION
5054330000	PSD	000	E2

MATERIAL NUMBER	CUSTOMER	SHEET NUMBER
SEE CHART	GENERAL	4 OF 5

△2 適合製品及び各種仕様書 APPLICABLE PRODUCTS AND VARIOUS SPECIFICATIONS

梱包仕様書 PACKAGING SPECIFICATION	5054339200 PS 200

適合嵌合相手 MATE WITH	シリーズ番号 SERIES NUMBER	505432	214527
	リテーナー対応 RETAINER COMPLIANT	NOT COMPLIANT	COMPLIANT (NATURAL, BLACK, RED, BLUE)
適合リテーナーシリーズ番号 APPLICABLE RETAINER SERIES NUMBER		-	214528
製品仕様書 PRODUCT SPECIFICATION		5054320000 PS 002	2145270000-PS PS 000
コネクタ取扱説明書 APPLICATION SPECIFICATION		5054320000-AS PS 000	

嵌合状態図
MATED CONNECTORS

△2 嵌合相手：505432シリーズ
MATE WITH : 505432 SERIES

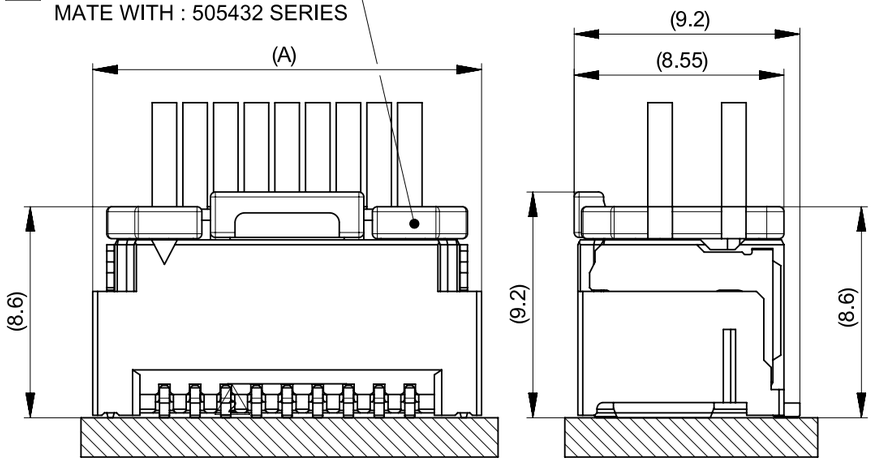

△2 嵌合相手：214527シリーズ
MATE WITH : 214527 SERIES

△2 リテーナー：214528シリーズ
RETAINER : 214528 SERIES

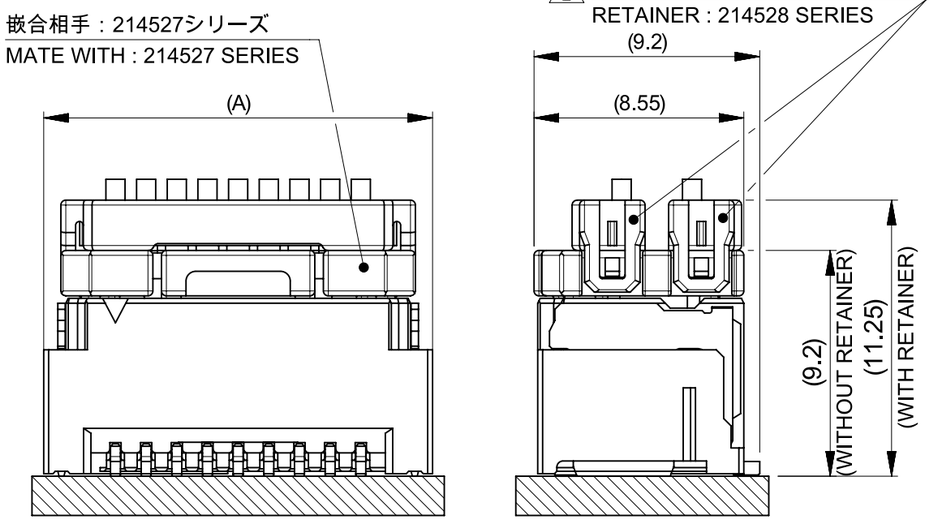

△5 505433**** 発注番号一覧 ORDER NUMBER LIST

WITHOUT				WITH				COVER TAPE
BLUE	RED	BLACK	NATURAL (BEIGE)	BLUE	RED	BLACK	NATURAL (BEIGE)	HOUSING COLOR
5054334274	5054334272	5054334271	5054334270	5054334284	5054334282	5054334281	5054334280	42
5054334074	5054334072	5054334071	5054334070	5054334084	5054334082	5054334081	5054334080	40
5054333874	5054333872	5054333871	5054333870	5054333884	5054333882	5054333881	5054333880	38
5054333674	5054333672	5054333671	5054333670	5054333684	5054333682	5054333681	5054333680	36
5054333474	5054333472	5054333471	5054333470	5054333484	5054333482	5054333481	5054333480	34
5054333274	5054333272	5054333271	5054333270	5054333284	5054333282	5054333281	5054333280	32
5054333074	5054333072	5054333071	5054333070	5054333084	5054333082	5054333081	5054333080	30
5054332874	5054332872	5054332871	5054332870	5054332884	5054332882	5054332881	5054332880	28
5054332674	5054332672	5054332671	5054332670	5054332684	5054332682	5054332681	5054332680	26
5054332474	5054332472	5054332471	5054332470	5054332484	5054332482	5054332481	5054332480	24
5054332274	5054332272	5054332271	5054332270	5054332284	5054332282	5054332281	5054332280	22
5054332074	5054332072	5054332071	5054332070	5054332084	5054332082	5054332081	5054332080	20
5054331874	5054331872	5054331871	5054331870	5054331884	5054331882	5054331881	5054331880	18
5054331674	5054331672	5054331671	5054331670	5054331684	5054331682	5054331681	5054331680	16
5054331474	5054331472	5054331471	5054331470	5054331484	5054331482	5054331481	5054331480	14
5054331274	5054331272	5054331271	5054331270	5054331284	5054331282	5054331281	5054331280	12
5054331074	5054331072	5054331071	5054331070	5054331084	5054331082	5054331081	5054331080	10
5054330874	5054330872	5054330871	5054330870	5054330884	5054330882	5054330881	5054330880	8
発注番号 ORDER NUMBER								極数 CIRCUIT SIZE
エンボステープ梱包 PACKAGING STYLE : EMBOSSED TAPE AND REEL								

THIS DRAWING CONTAINS INFORMATION THAT IS PROPRIETARY TO MOLEX ELECTRONIC TECHNOLOGIES, LLC AND SHOULD NOT BE USED WITHOUT WRITTEN PERMISSION

DIMENSION UNITS	mm
SCALE	NTS
GENERAL TOLERANCES (UNLESS SPECIFIED)	
ANGULAR TOL	± 3°
4 PLACES	± 0.20000
3 PLACES	± 0.2000
2 PLACES	± 0.200
1 PLACE	± 0.20
0 PLACES	± 0.20
DRAFT WHERE APPLICABLE MUST REMAIN WITHIN DIMENSIONS	

CURRENT REV DESC: REMOVED OBSOLETED PART NUMBER AS PER PCN #516676

STATUS: Production
DRWN: Pranav Arunkumar 2026-04-28
CHK'D: Ganesh Rao B 2026-05-06
APPR: Gurunandan GA 2026-05-06

THIRD ANGLE PROJECTION | DRAWING: A3-SIZE | SERIES: 505433

molex

MICRO-LOCK PLUS 1.25 W/B
DUAL ROW VERTICAL SMT PLUG ASSEMBLY
TIN-BISMUTH PLATING

PRODUCT CUSTOMER DRAWING

DOCUMENT NUMBER	DOC TYPE	DOC PART	REVISION
5054330000	PSD	000	E2

MATERIAL NUMBER	CUSTOMER	SHEET NUMBER
SEE CHART	GENERAL	5 OF 5