PCA85073A

Automotive Tiny Real-Time Clock/Calendar with Alarm Function and I²C-Bus

Rev. 1.4 — 14 July 2026 Product data sheet



1 General description

The PCA85073A is a CMOS[1] Real-Time Clock (RTC) and calendar optimized for low power consumption. An offset register allows fine-tuning of the clock. All addresses and data are transferred serially via the two-line bidirectional I²C-bus. The maximum data rate is 400 kbit/s. The register address is incremented automatically after each written or read data byte.

For a selection of NXP RTCs, see Table 46.

2 Features and benefits

- AEC-Q100 grade 2 compliant for automotive applications
- Provides year, month, day, weekday, hours, minutes, and seconds based on a 32.768 kHz quartz crystal
- Low current; typical 0.25 µA at V_{DD} = 3.0 V and T_{amb} = 25 °C
- Programmable clock output for peripheral devices (32.768 kHz, 16.384 kHz, 8.192 kHz, 4.096 kHz, 2.048 kHz, 1.024 kHz, and 1 Hz)
- Alarm function
- Minute and a half minute interrupt
- Internal Power-on Reset (POR)
- High temperature operation range: -40 °C to +105 °C
- Clock operating voltage: 0.9 V to 5.5 V
- 400 kHz two-line I²C-bus interface (at V_{DD} = 1.8 V to 5.5 V)
- Selectable integrated oscillator load capacitors for C_L = 7 pF or C_L = 12.5 pF
- Countdown timer
- Oscillator stop detection function
- Programmable offset register for frequency adjustment
- Latch-up performance exceeds 100 mA per JESD 78, Class II
- ElectroStatic Discharge (ESD) protection exceeds JESD 22
  - 4000 V Human-Body Model (HBM) (A114-A)
  - 1000 V Charged-Device Model (CDM) (C101)
- Package offered: TSSOP8

3 Applications

- Tracking the time of the day

1 The definition of the abbreviations and acronyms used in this data sheet can be found in Section 20.

- Accurate timing
- Dashboard
- Infotainment unit
- Air condition
- Center stack
- Telematics
- Body control and battery management

4 Ordering information

Table 1 describes the ordering information for PCA85073A.

Table 1. Ordering information

Type number	Topside marking	Package		
		Name	Description	Version
PCA85073ADP/Q900[1]	073Q	TSSOP8	Plastic thin shrink small outline package; 8 leads; body width 3 mm	SOT505-1

[1] Drop-in replacement for PCA85063ATT/A. The PCA85073ADP/Q900 leadframe is rougher for higher resistance to package delamination.

4.1 Ordering options

Table 2 describes the ordering options for PCA85073A.

Table 2. Ordering options

Type number	Orderable part number	Package	Packing method	Minimum order quantity	Temperature
PCA85073ADP/Q900	PCA85073ADP/Q900Z	TSSOP8	REEL 13" Q1 NDP SSB[1]	2500	T_{amb} = -40 °C to +105 °C

[1] This Packing Method uses a Static Shielding Bag (SSB) solution. Material shall be kept in a sealed bag between uses.

5 Block diagram

Figure 1 shows the labeled block diagram of PCA85073A.

All information provided in this document is subject to legal disclaimers.

© 2026 NXP B.V. All rights reserved.

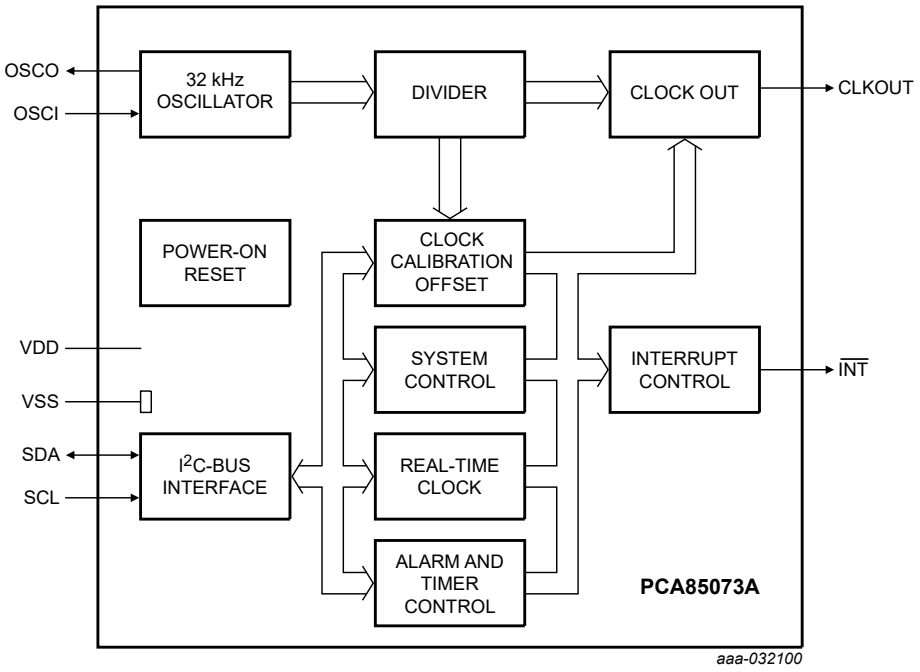

Figure 1. Block diagram of PCA85073A

6 Pinning information

This section provides the pin configuration and description of PCA85073A.

6.1 Pinning

Figure 2 shows the pin configuration of PCA85073A.

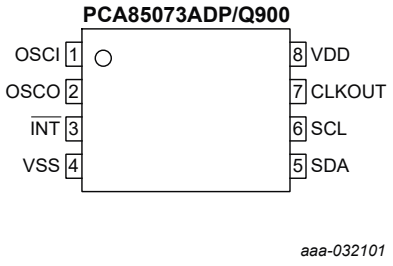

For mechanical details, see Figure 32.

Figure 2. Pin configuration for TSSOP8 (PCA85073ADP)

6.2 Pin description

Table 3 provides detailed description of various pins on PCA85073A.

Table 3. Pin description

Input or input/output pins must always be at a defined level (V_{SS} or V_{DD}) unless otherwise specified.

Symbol	Pin	Type	Description
OSCI	1	Input	Oscillator input

All information provided in this document is subject to legal disclaimers.

© 2026 NXP B.V. All rights reserved.

Table 3. Pin description...*continued*

Input or input/output pins must always be at a defined level (V_{SS} or V_{DD}) unless otherwise specified.

Symbol	Pin	Type	Description
OSCO	2	Output	Oscillator output
$\overline{INT}$[1]	3	Output	Interrupt output (open-drain)
VSS	4	Supply	Ground supply voltage
SDA[1]	5	Input/output	Serial data line
SCL[1]	6	Input	Serial clock input
CLKOUT	7	Output	Clock output (push-pull)
VDD	8	Supply	Supply voltage

[1] NXP recommends tying the VDD of the device and VDD of all the external pullup resistors to the same power supply.

7 Functional description

The PCA85073A contains 18 registers, each of a size of 8 bits with an auto-incrementing register address, an on-chip 32.768 kHz oscillator with integrated capacitors, a frequency divider, which provides the source clock for the RTC and calender, and an I²C-bus interface with a maximum data rate of 400 kbit/s.

The built-in address register will increment automatically after each read or write of a data byte up to the register 11h. After register 11h, the auto-incrementing will wrap around to address 00h (see Figure 3).

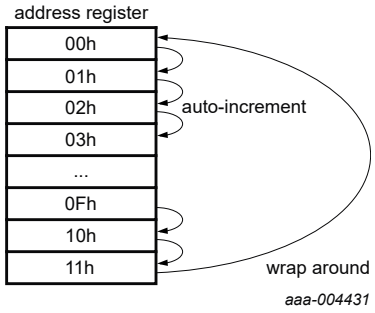

Figure 3. Handling address registers

All registers (see Table 4) are designed as addressable 8-bit parallel registers although not all bits are implemented. The first two registers (memory address 00h and 01h) are used as control and status register. The register at address 02h is an offset register allowing the fine-tuning of the clock; and at 03h is a free RAM byte. The addresses 04h through 0Ah are used as counters for the clock function (seconds up to years counters). Address locations 0Bh through 0Fh contain alarm registers, which define the conditions for an alarm. The registers at 10h and 11h are for the timer function.

The Seconds, Minutes, Hours, Days, Months, and Years as well as the corresponding alarm registers are all coded in Binary Coded Decimal (BCD) format. When one of the RTC registers is written or read, the contents of all-time counters are frozen. Therefore, faulty writing or reading of the clock and calendar during a carry condition is prevented. For details on maximum access time, see Section 7.4.

7.1 Registers organization

Table 4 lists all the registers used for PCA85073A.

All information provided in this document is subject to legal disclaimers.

© 2026 NXP B.V. All rights reserved.

Table 4. Registers overview

Bit positions labeled as - are not implemented. After reset, all registers are set according to Table 7.

Address	Register name	Bit								Reference
		7	6	5	4	3	2	1	0	
Control and status registers										
00h	Control_1	EXT_TEST	-	STOP	SR	-	CIE	12_24	CAP_SEL	Section 7.2.1
01h	Control_2	AIE	AF	MI	HMI	TF	COF[2:0]			Section 7.2.2
02h	Offset	MODE	OFFSET[6:0]							Section 7.2.3
03h	RAM_byte	B[7:0]								Section 7.2.4
Time and date registers										
04h	Seconds	OS	SECONDS (0 to 59)							Section 7.3.1
05h	Minutes	-	MINUTES (0 to 59)							Section 7.3.2
06h	Hours	-	-	AMPM	HOURS (1 to 12) in 12-hour mode					Section 7.3.3
				HOURS (0 to 23) in 24-hour mode						
07h	Days	-	-	DAYS (1 to 31)						Section 7.3.4
08h	Weekdays	-	-	-	-	-	WEEKDAYS (0 to 6)			Section 7.3.5
09h	Months	-	-	-	MONTHS (1 to 12)					Section 7.3.6
0Ah	Years	YEARS (0 to 99)								Section 7.3.7
Alarm registers										
0Bh	Second_alarm	AEN_S	SECOND_ALARM (0 to 59)							Section 7.5.1
0Ch	Minute_alarm	AEN_M	MINUTE_ALARM (0 to 59)							Section 7.5.2
0Dh	Hour_alarm	AEN_H	-	AMPM	HOUR_ALARM (1 to 12) in 12-hour mode					Section 7.5.3
				HOUR_ALARM (0 to 23) in 24-hour mode						
0Eh	Day_alarm	AEN_D	-	DAY_ALARM (1 to 31)						Section 7.5.4
0Fh	Weekday_alarm	AEN_W	-	-	-	-	WEEKDAY_ALARM (0 to 6)			Section 7.5.5
Timer registers										
10h	Timer_value	T[7:0]								Section 7.6.1
11h	Timer_mode	-	-	-	TCF[1:0]		TE	TIE	TI_TP	Section 7.6.2

7.2 Control registers

To ensure that all control registers are set to their default values, the V_{DD} level must be at zero volts at initial power up. If this is not possible, a reset must be initiated with the software reset command when power is stable. Refer to Section 7.2.1.3 for details.

7.2.1 Register Control_1

Table 5 describes the bit configuration of the Control_1 register.

Table 5. Control_1 - control and status register 1 (address 00h) bit description

Bit	Symbol	Value	Description	Reference
7	EXT_TEST		**External clock test mode**	Section 7.2.1.1
		0[1]	Normal mode	
		1	External clock test mode	
6	-	0	Unused	-
5	STOP		**STOP bit**	Section 7.2.1.2
		0[1]	RTC clock runs	
		1	The RTC clock is stopped; all RTC divider chain flip-flops are asynchronously set logic 0	

All information provided in this document is subject to legal disclaimers.

© 2026 NXP B.V. All rights reserved.

Table 5. Control_1 - control and status register 1 (address 00h) bit description...*continued*

Bit	Symbol	Value	Description	Reference
4	SR		**software reset**	Section 7.2.1.3
		0[1]	No software reset	
		1	Initiate software reset[2]; this bit always returns a 0 when read	
3	-	0	Unused	-
2	CIE		**Correction interrupt enable**	Section 7.2.3
		0[1]	No correction interrupt generated	
		1	Interrupt pulses are generated at every correction cycle	
1	12_24		**12 or 24-hour mode**	Section 7.3.3 Section 7.5.3
		0[1]	24-hour mode is selected	
		1	12-hour mode is selected	
0	CAP_SEL		**Internal oscillator capacitor selection** for quartz crystals with a corresponding load capacitance	-
		0[1]	7 pF	
		1	12.5 pF	

[1] Default value.
[2] For a software reset, 0101 1000 (58h) must be sent to register Control_1 (see Section 7.2.1.3).

7.2.1.1 EXT_TEST: external clock test mode

A test mode is available, which allows for onboard testing. In this mode, it is possible to set up test conditions and control the operation of the RTC.

The test mode is entered by setting bit EXT_TEST in register Control_1. Then pin CLKOUT becomes an input. The test mode replaces the internal clock signal with the signal applied to pin CLKOUT.

The signal applied to pin CLKOUT must have a minimum pulse width of 300 ns and a maximum period of 1 000 ns. The internal clock, now sourced from CLKOUT, is divided down to 1 Hz by a 2^6 divide chain called a prescaler. The prescaler can be set into a known state by using bit STOP. When bit STOP is set, the prescaler is reset to 0. (STOP must be cleared before the prescaler can operate again.)

From a stop condition, the first 1 second increment will take place after 32 positive edges on pin CLKOUT. Thereafter, every 64 positive edges cause a 1 second increment.

Remark: Entry into test mode is not synchronized to the internal 64 Hz clock. When entering the test mode, no assumption as to the state of the prescaler can be made.

Operation example:

1. Set EXT_TEST test mode (register Control_1, bit EXT_TEST = 1).
2. Set STOP (register Control_1, bit STOP = 1).
3. Clear STOP (register Control_1, bit STOP = 0).
4. Set time registers to the desired value.
5. Apply 32 clock pulses to pin CLKOUT.
6. Read the time registers to see the first change.
7. Apply 64 clock pulses to pin CLKOUT.

All information provided in this document is subject to legal disclaimers.

© 2026 NXP B.V. All rights reserved.

8. Read the time registers to see the second change.

Repeat 7 and 8 for additional increments.

7.2.1.2 STOP: STOP bit function

The function of the STOP bit (see Figure 4) is to allow for accurate starting of the time circuits. The STOP bit function causes the upper part of the prescaler (F_2 to F_{14}) to be held in reset and therefore no 1 Hz ticks are generated. It also stops the output of clock frequencies below 8 kHz on pin CLKOUT.

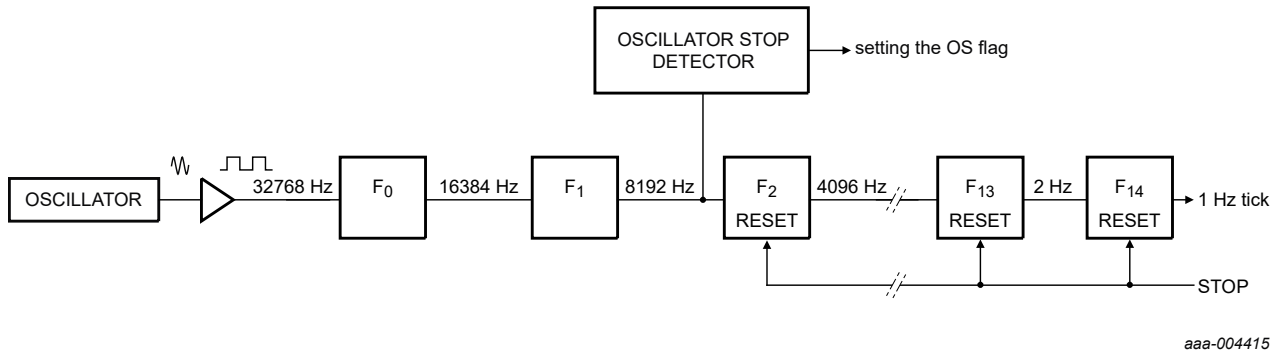

Figure 4. STOP bit functional diagram

The time circuits can then be set and do not increment until the STOP bit is released (see Figure 5 and Table 6).

Table 6. First increment of time circuits after STOP bit release

Bit	Prescaler bits	[1]	1 Hz tick	Time	Comment
STOP	F_0F_1-F_2 to F_{14}			hh:mm:ss	
The clock is running normally					
0	01-0 0001 1101 0100			12:45:12	Prescaler counting normally
STOP bit is activated by the user. F_0F_1 are not reset and values cannot be predicted externally					
1	XX-0 0000 0000 0000			12:45:12	Prescaler is reset; time circuits are frozen
A new time is set by the user					
1	XX-0 0000 0000 0000			08:00:00	Prescaler is reset; time circuits are frozen
STOP bit is released by the user					

All information provided in this document is subject to legal disclaimers.

© 2026 NXP B.V. All rights reserved.

Table 6. First increment of time circuits after STOP bit release*...continued*

Bit	Prescaler bits	[1]	1 Hz tick	Time	Comment
STOP	F_0F_1-F_2 to F_{14}			hh:mm:ss	
0	XX-0 0000 0000 0000	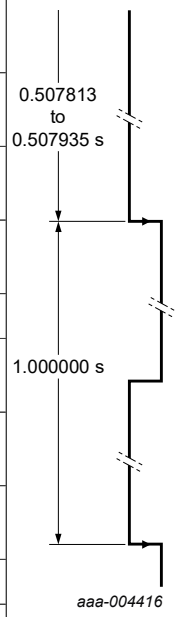		08:00:00	Prescaler is now running
	XX-1 0000 0000 0000			08:00:00	-
	XX-0 1000 0000 0000			08:00:00	-
	XX-1 1000 0000 0000			08:00:00	-
	:			:	:
	11-1 1111 1111 1110			08:00:00	-
	00-0 0000 0000 0001			08:00:01	The 0 to 1 transition of F_{14} increments the time circuits
	10-0 0000 0000 0001			08:00:01	-
	:			:	:
	11-1 1111 1111 1111			08:00:01	-
	00-0 0000 0000 0000			08:00:01	-
	10-0 0000 0000 0000			08:00:01	-
	:			:	:
	11-1 1111 1111 1110			08:00:01	-
	00-0 0000 0000 0001			08:00:02	The 0 to 1 transition of F_{14} increments the time circuits

[1] F_0 is clocked at 32.768 kHz.

The lower two stages of the prescaler (F_0 and F_1) are not reset. And because the I²C-bus is asynchronous to the crystal oscillator, the accuracy of restarting the time circuits is between zero and one 8.192 kHz cycle (see Figure 5).

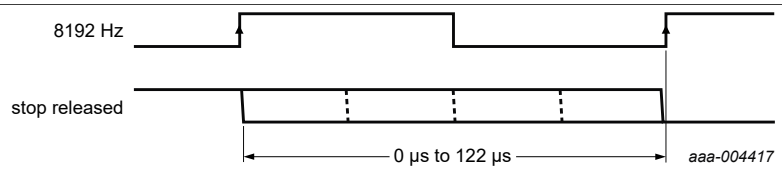

Figure 5. STOP bit release timing

The first increment of the time circuits is between 0.507 813 s and 0.507 935 s after STOP bit is released. The uncertainty is caused by the prescaler bits F_0 and F_1 not being reset (see Table 6) and the unknown state of the 32 kHz clock.

All information provided in this document is subject to legal disclaimers.

© 2026 NXP B.V. All rights reserved.

7.2.1.3 Software reset

A reset is automatically generated at power on. A reset can also be initiated with the software reset command. Software reset command means setting bits 6, 4, and 3 in register Control_1 (00h) logic 1 and all other bits logic 0 by sending the bit sequence 0101 1000 (58h), see Figure 6.

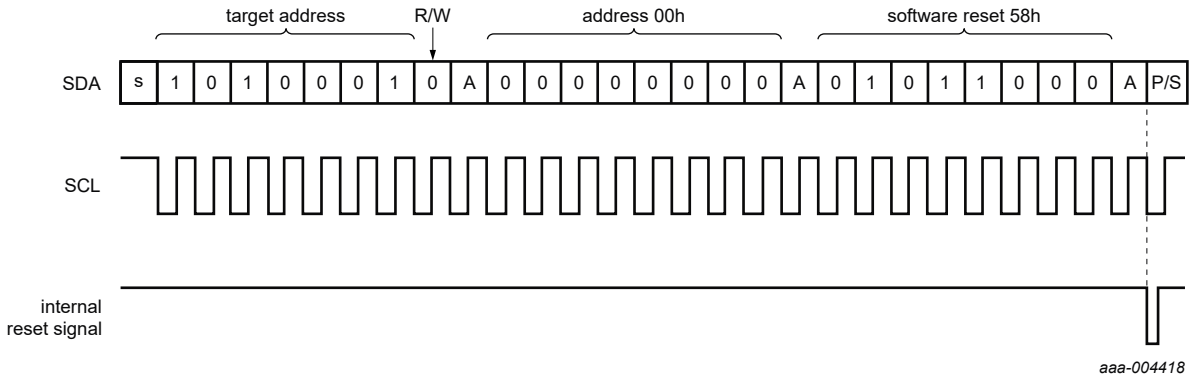

After sending the software reset command, it is recommended to re-initialize the interface by a STOP and START.

Figure 6. Software reset command

In reset state, all registers are set according to Table 7 and the address pointer returns to address 00h.

Table 7. Registers reset values

Address	Register name	Bit							
		7	6	5	4	3	2	1	0
00h	Control_1	0	0	0	0	0	0	0	0
01h	Control_2	0	0	0	0	0	0	0	0
02h	Offset	0	0	0	0	0	0	0	0
03h	RAM_byte	0	0	0	0	0	0	0	0
04h	Seconds	1	0	0	0	0	0	0	0
05h	Minutes	0	0	0	0	0	0	0	0
06h	Hours	0	0	0	0	0	0	0	0
07h	Days	0	0	0	0	0	0	0	1
08h	Weekdays	0	0	0	0	0	1	1	0
09h	Months	0	0	0	0	0	0	0	1
0Ah	Years	0	0	0	0	0	0	0	0
0Bh	Second_alarm	1	0	0	0	0	0	0	0
0Ch	Minute_alarm	1	0	0	0	0	0	0	0
0Dh	Hour_alarm	1	0	0	0	0	0	0	0
0Eh	Day_alarm	1	0	0	0	0	0	0	0
0Fh	Weekday_alarm	1	0	0	0	0	0	0	0
10h	Timer_value	0	0	0	0	0	0	0	0
11h	Timer_mode	0	0	0	1	1	0	0	0

The PCA85073A resets to:

All information provided in this document is subject to legal disclaimers.

© 2026 NXP B.V. All rights reserved.

Time

00:00:00

Date

20000101

Weekday

Saturday

7.2.2 Register Control_2

Table 8 describes the bit configuration of the Control_2 register.

Table 8. Control_2 - control and status register 2 (address 01h) bit description

Bit	Symbol	Value	Description	Reference
7	AIE		**Alarm interrupt**	Section 7.2.2.1 Section 7.5.6
		0[1]	Disabled	
		1	Enabled	
6	AF		**Alarm flag**	Section 7.2.2.1 Section 7.5.6
		0[1]	Read: alarm flag inactive	
			Write: alarm flag is cleared	
		1	Read: alarm flag active	
			Write: alarm flag remains unchanged	
5	MI		**Minute interrupt**	Section 7.2.2.2 Section 7.2.2.3
		0[1]	Disabled	
		1	Enabled	
4	HMI		**Half minute interrupt**	Section 7.2.2.2 Section 7.2.2.3
		0[1]	Disabled	
		1	Enabled	
3	TF		**Timer flag**	Section 7.2.2.1 Section 7.2.2.3 Section 7.6.3
		0[1]	No timer interrupt generated	
		1	Flag set when timer interrupt generated	
2 to 0	COF[2:0]	See Table 10	**CLKOUT control**	Section 7.2.2.4

[1] Default value.

7.2.2.1 Alarm interrupt

Figure 7 shows the interrupt scheme for PCA85073A.

All information provided in this document is subject to legal disclaimers.

© 2026 NXP B.V. All rights reserved.

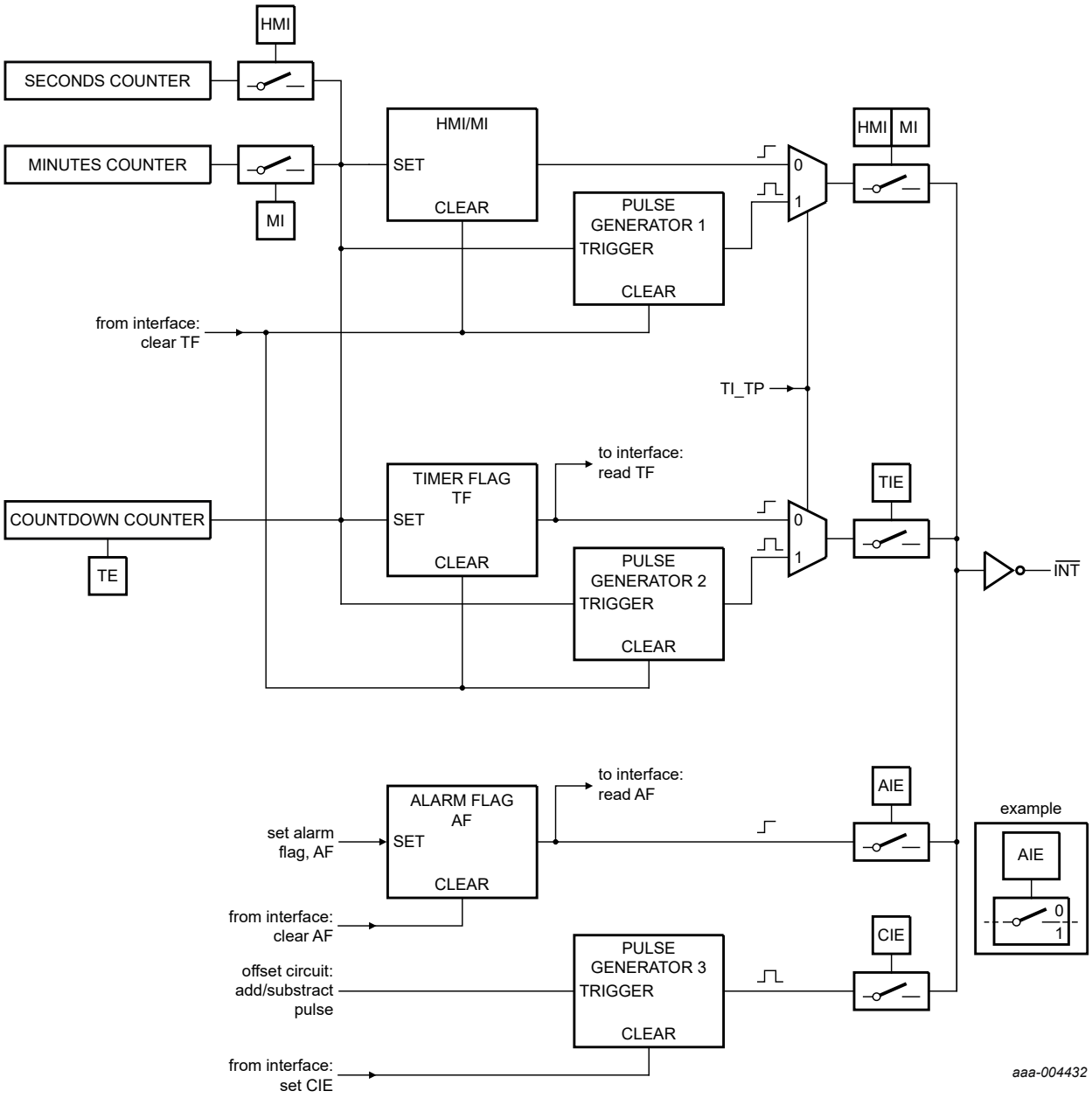

Figure 7. Interrupt scheme

AIE

This bit activates or deactivates the generation of an interrupt when AF is asserted, respectively.

AF

When an alarm occurs, AF is set to logic 1. This bit maintains its value until overwritten by a command. To prevent one flag being overwritten while clearing another, a logic AND is performed during a write access.

All information provided in this document is subject to legal disclaimers.

© 2026 NXP B.V. All rights reserved.

7.2.2.2 MI and HMI: minute and a half minute interrupt

The minute interrupt (bit MI) and half minute interrupt (bit HMI) are pre-defined timers for generating interrupt pulses on pin $\overline{INT}$; see Figure 8. The timers are running in sync with the seconds counter (see Table 18).

The minute and half minute interrupts must only be used when the frequency offset is set to normal mode (MODE = 0), see Section 7.2.3. In normal mode, the interrupt pulses on pin $\overline{INT}$ are $^{1}/_{64}$ s wide.

When starting MI, the first interrupt will be generated after 1 second to 59 seconds. When starting HMI, the first interrupt will be generated after 1 second to 29 seconds. Subsequent periods do not have such a delay. The timers can be enabled independently from one another. However, a minute interrupt enabled on top of a half minute interrupt is not distinguishable.

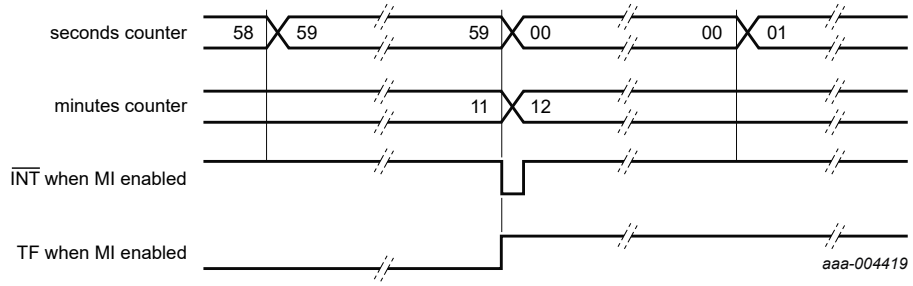

In this example, the TF flag is not cleared after an interrupt.

Figure 8. INT example for MI

Table 9. Effect of bits MI and HMI on $\overline{INT}$ generation

Minute interrupt (bit MI)	Half minute interrupt (bit HMI)	Result
0	0	No interrupt generated
1	0	An interrupt every minute
0	1	An interrupt every 30 s
1	1	An interrupt every 30 s

The duration of the timer is affected by the register Offset (see Section 7.2.3). Only when OFFSET[6:0] has the value 00h the periods are consistent.

7.2.2.3 TF: timer flag

The timer flag (bit TF) is set logic 1 on the first trigger of MI, HMI, or the countdown timer. The purpose of the flag is to allow the controlling system to interrogate what caused the interrupt: timer or alarm. The flag can be read and cleared by command.

The status of the timer flag TF can affect the $\overline{INT}$ pulse generation depending on the setting of TI_TP (see Section 7.6.2):

- When TI_TP is set logic 1
  - an $\overline{INT}$ pulse is generated independent of the status of the timer flag TF
  - TF stays set until it is cleared
  - TF does not affect $\overline{INT}$
  - the countdown timer runs in a repetitive loop and keeps generating timed periods
- When TI_TP is set logic 0
  - the $\overline{INT}$ generation follows the TF flag
  - TF stays set until it is cleared

All information provided in this document is subject to legal disclaimers.

© 2026 NXP B.V. All rights reserved.

– If TF is not cleared before the next coming interrupt, no $\overline{INT}$ is generated
– the countdown timer stops after the first countdown

7.2.2.4 COF[2:0]: Clock output frequency

A programmable square wave is available at pin CLKOUT. Operation is controlled by the COF[2:0] bits in the register Control_2. Frequencies of 32.768 kHz (default) down to 1 Hz can be generated for use as a system clock, microcontroller clock, input to a charge pump, or for calibration of the oscillator.

Pin CLKOUT is a push-pull output and enabled at power on. CLKOUT can be disabled by setting COF[2:0] to 111. When disabled, the CLKOUT is LOW.

The duty cycle of the selected clock is not controlled. However, due to the nature of the clock generation, all clock frequencies except 32.768 kHz have a duty cycle of 50 : 50.

The STOP bit function can also affect the CLKOUT signal, depending on the selected frequency. When the STOP bit is set to logic 1, the CLKOUT pin generates a continuous LOW for those frequencies that can be stopped. For more details of the STOP bit function, see Section 7.2.1.2.

Table 10. CLKOUT frequency selection

COF[2:0]	CLKOUT frequency (Hz)	Typical duty cycle[1]	Effect of STOP bit
000[2]	32 768	60 : 40 to 40 : 60	no effect
001	16 384	50 : 50	no effect
010	8 192	50 : 50	no effect
011	4 096	50 : 50	CLKOUT = LOW
100	2 048	50 : 50	CLKOUT = LOW
101	1 024	50 : 50	CLKOUT = LOW
110	1[3]	50 : 50	CLKOUT = LOW
111	CLKOUT = LOW	-	-

[1] Duty cycle definition: % HIGH-level time: % LOW-level time.
[2] Default value.
[3] 1 Hz clock pulses are affected by offset correction pulses.

7.2.3 Register Offset

The PCA85073A incorporates an offset register (address 02h) which can be used to implement several functions, such as:

- Accuracy tuning
- Aging adjustment
- Temperature compensation

Table 11. Offset - offset register (address 02h) bit description

Bit	Symbol	Value	Description
7	MODE		**Offset mode**
		0[1]	Normal mode: offset is made once every two hours
		1	Course mode: offset is made every 4 minutes
6 to 0	OFFSET[6:0]	See Table 12	**Offset value**

[1] Default value.

All information provided in this document is subject to legal disclaimers.

© 2026 NXP B.V. All rights reserved.

For MODE = 0, each Least Significant Bit (LSB) introduces an offset of 4.34 ppm. For MODE = 1, each LSB introduces an offset of 4.069 ppm. The offset value is coded in two's complement giving a range of +63 LSB to -64 LSB.

Table 12. Offset values

OFFSET[6:0]	Offset value in decimal	Offset value in ppm	
		Normal mode MODE = 0	Fast mode MODE = 1
011 1111	+63	+273.420	+256.347
011 1110	+62	+269.080	+252.278
:	:	:	:
000 0010	+2	+8.680	+8.138
000 0001	+1	+4.340	+4.069
000 0000[1]	0	0[1]	0[1]
111 1111	-1	-4.340	-4.069
111 1110	-2	-8.680	-8.138
:	:	:	:
100 0001	-63	-273.420	-256.347
100 0000	-64	-277.760	-260.416

[1] Default value.

The correction is made by adding or subtracting clock correction pulses, thereby changing the period of a single second but not by changing the oscillator frequency.

It is possible to monitor when correction pulses are applied. To enable correction interrupt generation, bit CIE (register Control_1) has to be set to logic 1. At every correction cycle, a pulse is generated on pin $\overline{INT}$. The pulse width depends on the correction mode. If multiple correction pulses are applied, an interrupt pulse is generated for each correction pulse applied.

7.2.3.1 Correction when MODE = 0

The correction is triggered once every two hours and then correction pulses are applied once per minute until the programmed correction values have been implemented.

Table 13. Correction pulses for MODE = 0

Correction value	Update every n^{th} hour	Minute	Correction pulses on $\overline{INT}$ per minute[1]
+1 or -1	2	00	1
+2 or -2	2	00 and 01	1
+3 or -3	2	00, 01, and 02	1
:	:	:	:
+59 or -59	2	00 to 58	1
+60 or -60	2	00 to 59	1
+61 or -61	2	00 to 59	1
	2nd and next hour	00	1

All information provided in this document is subject to legal disclaimers.

© 2026 NXP B.V. All rights reserved.

Table 13. Correction pulses for MODE = 0*...continued*

Correction value	Update every nth hour	Minute	Correction pulses on $\overline{INT}$ per minute[1]
+62 or -62	2	00 to 59	1
	2nd and next hour	00 and 01	1
+63 or -63	02	00 to 59	1
	2nd and next hour	00, 01, and 02	1
-64	02	00 to 59	1
	2nd and next hour	00, 01, 02, and 03	1

[1] The correction pulses on pin $\overline{INT}$ are $^1/_{64}$ s wide.

In MODE = 0, any timer or clock output using a frequency below 64 Hz is affected by the clock correction (see Table 14).

Table 14. Effect of correction pulses on frequencies for MODE = 0

Frequency (Hz)	Effect of correction
CLKOUT	
32 768	No effect
16 384	No effect
8 192	No effect
4 096	No effect
2 048	No effect
1 024	No effect
1	Affected
Timer source clock	
4 096	No effect
64	No effect
1	Affected
$^1/_{60}$	Affected

7.2.3.2 Correction when MODE = 1

The correction is triggered once every four minutes and then correction pulses are applied once per second up to a maximum of 60 pulses. When correction values greater than 60 pulses are used, additional correction pulses are made in the 59th second.

Clock correction is made more frequently in MODE = 1; however, this can result in higher power consumption.

Table 15. Correction pulses for MODE = 1

Correction value	Update every nth minute	Second	Correction pulses on $\overline{INT}$ per second[1]
+1 or -1	4	00	1
+2 or -2	4	00 and 01	1
+3 or -3	4	00, 01, and 02	1

All information provided in this document is subject to legal disclaimers.

© 2026 NXP B.V. All rights reserved.

Table 15. Correction pulses for MODE = 1*...continued*

Correction value	Update every n^{th} minute	Second	Correction pulses on $\overline{INT}$ per second[1]
:	:	:	:
+59 or -59	4	00 to 58	1
+60 or -60	4	00 to 59	1
+61 or -61	4	00 to 58	1
	4	59	2
+62 or -62	4	00 to 58	1
	4	59	3
+63 or -63	4	00 to 58	1
	4	59	4
-64	4	00 to 58	1
	4	59	5

[1] The correction pulses on pin $\overline{INT}$ are $^{1}/_{1\,024}$ s wide. For multiple pulses, they are repeated at an interval of $^{1}/_{512}$ s.

In MODE = 1, any timer source clock using a frequency below 1.024 kHz is also affected by the clock correction (see Table 16).

Table 16. Effect of correction pulses on frequencies for MODE = 1

Frequency (Hz)	Effect of correction
CLKOUT	
32 768	No effect
16 384	No effect
8 192	No effect
4 096	No effect
2 048	No effect
1 024	No effect
1	Affected
Timer source clock	
4 096	No effect
64	Affected
1	Affected
$^{1}/_{60}$	Affected

7.2.3.3 Offset calibration workflow

The calibration offset has to be calculated based on the time. Figure 9 shows the workflow how the offset register values can be calculated:

All information provided in this document is subject to legal disclaimers.

© 2026 NXP B.V. All rights reserved.

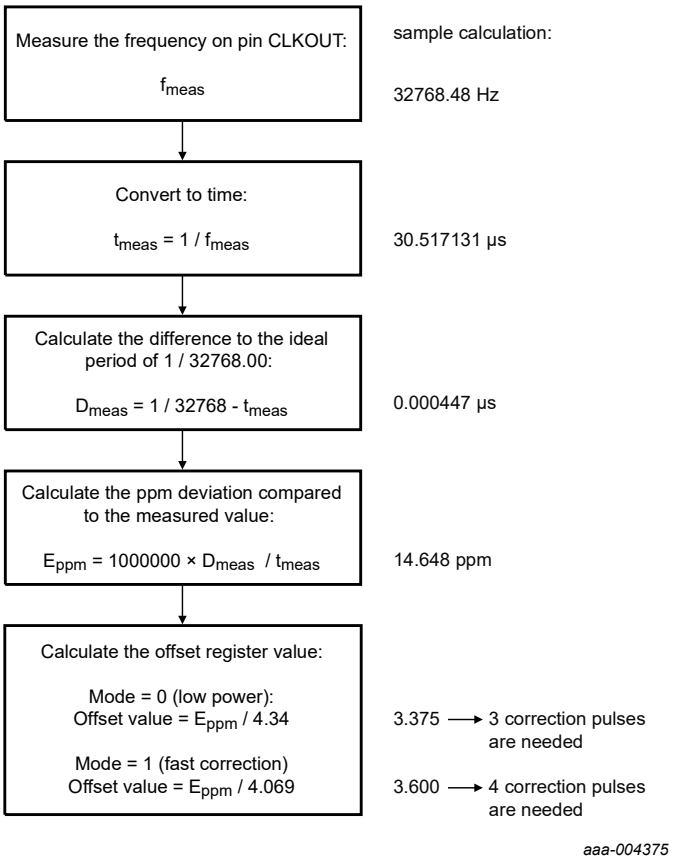

Figure 9. Offset calibration calculation workflow

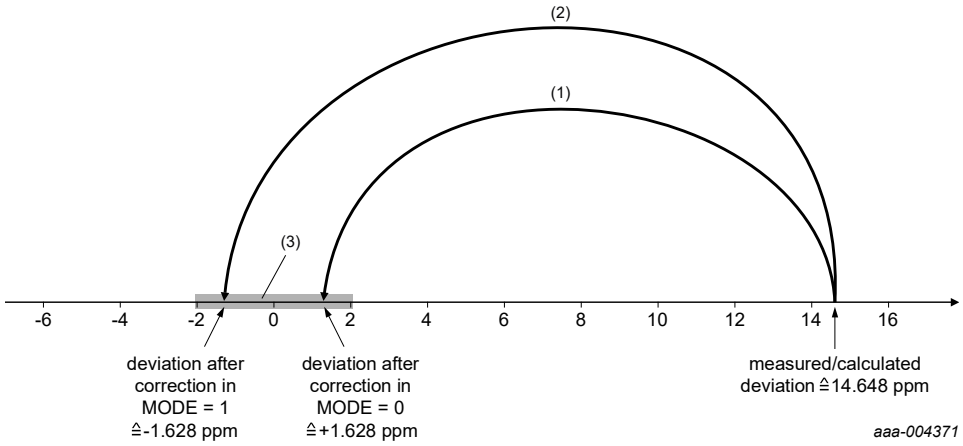

With the offset calibration, an accuracy of ±2 ppm (0.5 × offset per LSB) can be reached (see Table 12).

±1 ppm corresponds to a time deviation of 0.0864 seconds per day.

1. 3 correction pulses in MODE = 0 correspond to -13.02 ppm.
2. 4 correction pulses in MODE = 1 correspond to -16.276 ppm.
3. Reachable accuracy zone.

Figure 10. Result of offset calibration

All information provided in this document is subject to legal disclaimers.

© 2026 NXP B.V. All rights reserved.

7.2.4 Register RAM_byte

The PCA85073A provides a free RAM byte, which can be used for any purpose, for example, the status byte of the system.

Table 17. RAM_byte - 8-bit RAM register (address 03h) bit description

Bit	Symbol	Value	Description
7 to 0	B[7:0]	0000 0000[1] to 1111 1111	**RAM content**

[1] Default value.

7.3 Time and date registers

Most of the registers are coded in the BCD format to simplify application use.

7.3.1 Register Seconds

Table 18 and Table 19 describe the bit configuration of the Seconds register and the representation of seconds coded in BCD format, respectively.

Table 18. Seconds - seconds register (address 04h) bit description

Bit	Symbol	Value	Place value	Description
7	OS			**Oscillator stop**
		0	-	Clock integrity is guaranteed
		1[1]	-	Clock integrity is not guaranteed; the oscillator has stopped or has been interrupted
6 to 4	SECONDS	0[1] to 5	Ten's place	**Actual seconds** coded in BCD format, see Table 19
3 to 0		0[1] to 9	Unit place	

[1] Default value.

Table 19. Seconds coded in BCD format

Seconds value in decimal	Upper-digit (ten's place)			Digit (unit place)			
	Bit 6	Bit 5	Bit 4	Bit 3	Bit 2	Bit 1	Bit 0
00[1]	0	0	0	0	0	0	0
01	0	0	0	0	0	0	1
02	0	0	0	0	0	1	0
:	:	:	:	:	:	:	:
09	0	0	0	1	0	0	1
10	0	0	1	0	0	0	0
:	:	:	:	:	:	:	:
58	1	0	1	1	0	0	0
59	1	0	1	1	0	0	1

All information provided in this document is subject to legal disclaimers.

© 2026 NXP B.V. All rights reserved.

[1] Default value.

7.3.1.1 OS: Oscillator stop

When the oscillator of the PCA85073A is stopped, the OS flag is set. The oscillator can be stopped, for example, by connecting one of the oscillator pins OSCI or OSCO to the ground. The oscillator is considered to be stopped during the time between power on and stable crystal resonance. This time can be in the range of 200 ms to 2 s depending on crystal type, temperature, and supply voltage.

The flag remains set until cleared by command (see Figure 11). If the flag cannot be cleared, then the oscillator is not running. This method can be used to monitor the oscillator and to determine if the supply voltage has reduced to the point where oscillation fails.

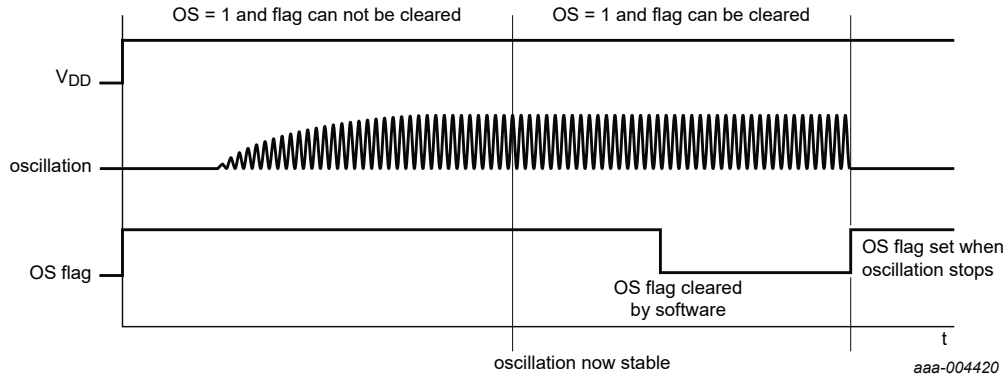

Figure 11. OS flag

7.3.2 Register Minutes

Table 20 describes the bit configuration of the Minutes register.

Table 20. Minutes - minutes register (address 05h) bit description

Bit	Symbol	Value	Place value	Description
7	-	0	-	Unused
6 to 4	MINUTES	0[1] to 5	Ten's place	**Actual minutes** coded in BCD format
3 to 0		0[1] to 9	Unit place	

[1] Default value.

7.3.3 Register Hours

Table 21 describes the bit configuration of the Hours register.

Table 21. Hours - hours register (address 06h) bit description

Bit	Symbol	Value	Place value	Description
7 to 6	-	00	-	Unused
12-hour mode[1]				
5	AMPM			**AM/PM indicator**
		0[2]	-	AM
		1	-	PM

All information provided in this document is subject to legal disclaimers.

© 2026 NXP B.V. All rights reserved.

Table 21. Hours - hours register (address 06h) bit description...*continued*

Bit	Symbol	Value	Place value	Description
4	HOURS	0[2] to 1	Ten's place	**Actual hours in 12-hour mode** coded in BCD format
3 to 0		0[2] to 9	Unit place	
24-hour mode [1]				
5 to 4	HOURS	0[2] to 2	Ten's place	**Actual hours in 24-hour mode** coded in BCD format
3 to 0		0[2] to 9	Unit place	

[1] Hour mode is set by the 12_24 bit in register Control_1.
[2] Default value.

7.3.4 Register Days

Table 22 describes the bit configuration of the Days register.

Table 22. Days - days register (address 07h) bit description

Bit	Symbol	Value	Place value	Description
7 to 6	-	00	-	Unused
5 to 4	DAYS[1]	0[2] to 3	Ten's place	**Actual day** coded in BCD format
3 to 0		0[3] to 9	Unit place	

[1] If the year counter contains a value, which is exactly divisible by 4 (including the year 00), the PCA85073A compensates for leap years by adding a 29th day to February.
[2] Default value.
[3] The default value is 1.

7.3.5 Register Weekdays

Table 23 describes the bit configuration of the Weekdays register and Table 24 shows the weekday assignments stored in the Weekdays register.

Table 23. Weekdays - weekdays register (address 08h) bit description

Bit	Symbol	Value	Description
7 to 3	-	0000 0	Unused
2 to 0	WEEKDAYS	0 to 6	**Actual weekday** values, see Table 24

Table 24. Weekday assignments

Day[1]	Bit		
	2	1	0
Sunday	0	0	0
Monday	0	0	1
Tuesday	0	1	0
Wednesday	0	1	1
Thursday	1	0	0
Friday	1	0	1
Saturday[2]	1	1	0

All information provided in this document is subject to legal disclaimers.

© 2026 NXP B.V. All rights reserved.

[1] The definition can be reassigned by the user.
[2] Default value.

7.3.6 Register Months

Table 25 describes the bit configuration of the Months register and Table 26 shows the month assignments stored in the Months register.

Table 25. Months - months register (address 09h) bit description

Bit	Symbol	Value	Place value	Description
7 to 5	-	000	-	Unused
4	MONTHS	0 to 1	ten's place	**Actual month** coded in BCD format, see Table 26
3 to 0		0 to 9	unit place	

Table 26. Month assignments in BCD format

Month	Upper-digit (ten's place)	Digit (unit place)			
	Bit 4	Bit 3	Bit 2	Bit 1	Bit 0
January[1]	0	0	0	0	1
February	0	0	0	1	0
March	0	0	0	1	1
April	0	0	1	0	0
May	0	0	1	0	1
June	0	0	1	1	0
July	0	0	1	1	1
August	0	1	0	0	0
September	0	1	0	0	1
October	1	0	0	0	0
November	1	0	0	0	1
December	1	0	0	1	0

[1] Default value.

7.3.7 Register Years

Table 27 describes the bit configuration of the Years register.

Table 27. Years - years register (0Ah) bit description

Bit	Symbol	Value	Place value	Description
7 to 4	YEARS	0[1] to 9	Ten's place	**Actual year** coded in BCD format
3 to 0		0[1] to 9	Unit place	

[1] Default value.

All information provided in this document is subject to legal disclaimers.

© 2026 NXP B.V. All rights reserved.

7.4 Setting and reading the time

Figure 12 shows the data flow and data dependencies starting from the 1 Hz clock tick.

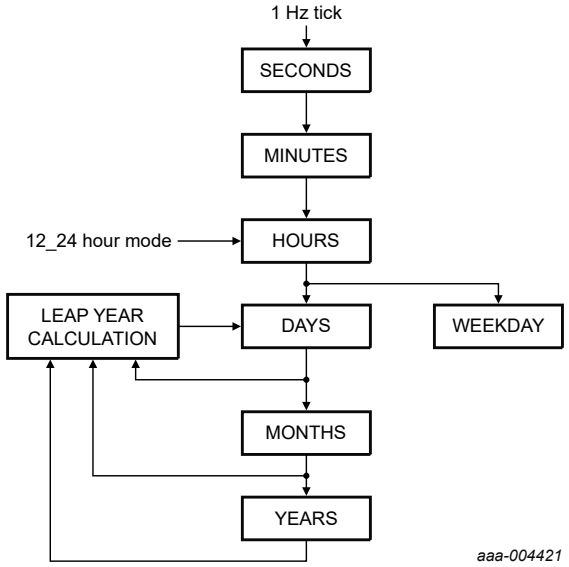

Figure 12. Data flow for the time function

During read/write operations, the time counting circuits (memory locations 04h through 0Ah) are blocked.

The blocking prevents

- Faulty reading of the clock and calendar during a carry condition
- Incrementing the time registers during the read cycle

After this read/write access is completed, the time circuit is released again and any pending request to increment the time counters that occurred during the read/write access is serviced. A maximum of 1 request can be stored; therefore, all accesses must be completed within 1 second (see Figure 13).

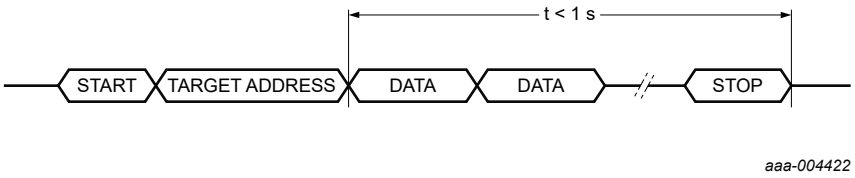

Figure 13. Access time for read/write operations

Because of this method, it is important to make a read or write access in one go, that is, setting or reading seconds through to years must be made in one single access. Failing to comply with this method could result in the time becoming corrupted.

As an example, if the time (seconds through to hours) is set in one access and then in a second access the date is set, it is possible that the time increments between the two accesses. A similar problem exists when reading. A roll-over can occur between reads therefore giving the minutes from one moment and the hours from the next.

Recommended method for reading the time:

1. Send a START condition and the target address (see Table 38) for write (A2h)
2. Set the address pointer to 4 (Seconds) by sending 04h
3. Send a RESTART condition or STOP followed by START

All information provided in this document is subject to legal disclaimers.

© 2026 NXP B.V. All rights reserved.

4. Send the target address for read (A3h)
5. Read Seconds
6. Read Minutes
7. Read Hours
8. Read Days
9. Read Weekdays
10. Read Months
11. Read Years
12. Send a STOP condition

7.5 Alarm registers

This section covers the various alarm function and its registers.

7.5.1 Register Second_alarm

Table 28 describes the bit configuration of the Second_alarm register.

Table 28. Second_alarm - second alarm register (address 0Bh) bit description

Bit	Symbol	Value	Place value	Description
7	AEN_S			**Second alarm**
		0	-	Enabled
		1[1]	-	Disabled
6 to 4	SECOND_ALARM	0[1] to 5	Ten's place	**Second alarm information** coded in BCD format
3 to 0		0[1] to 9	Unit place	

[1] Default value.

7.5.2 Register Minute_alarm

Table 29 describes the bit configuration of the Minute_alarm register.

Table 29. Minute_alarm - minute alarm register (address 0Ch) bit description

Bit	Symbol	Value	Place value	Description
7	AEN_M			**Minute alarm**
		0	-	Enabled
		1[1]	-	Disabled
6 to 4	MINUTE_ALARM	0[1] to 5	Ten's place	**Minute alarm information** coded in BCD format
3 to 0		0[1] to 9	Unit place	

[1] Default value.

7.5.3 Register Hour_alarm

Table 30 describes the bit configuration of the Hour_alarm register.

All information provided in this document is subject to legal disclaimers.

© 2026 NXP B.V. All rights reserved.

Table 30. Hour_alarm - hour alarm register (address 0Dh) bit description

Bit	Symbol	Value	Place value	Description
7	AEN_H			**Hour alarm**
		0	-	Enabled
		1[1]	-	Disabled
6	-	0	-	Unused
12-hour mode[2]				
5	AMPM			**AM/PM indicator**
		0[1]	-	AM
		1	-	PM
4	HOUR_ALARM	0[1] to 1	Ten's place	**Hour alarm information in 12-hour mode** coded in BCD format
3 to 0		0[1] to 9	Unit place	
24-hour mode [2]				
5 to 4	HOUR_ALARM	0[1] to 2	Ten's place	**Hour alarm information in 24-hour mode** coded in BCD format
3 to 0		0[1] to 9	Unit place	

[1] Default value.
[2] Hour mode is set by the 12_24 bit in register Control_1.

7.5.4 Register Day_alarm

Table 31 describes the bit configuration of the Day_alarm register.

Table 31. Day_alarm - day alarm register (address 0Eh) bit description

Bit	Symbol	Value	Place value	Description
7	AEN_D			**Day alarm**
		0	-	Enabled
		1[1]	-	Disabled
6	-	0	-	Unused
5 to 4	DAY_ALARM	0[1] to 3	Ten's place	**Day alarm information** coded in BCD format
3 to 0		0[1] to 9	Unit place	

[1] Default value.

7.5.5 Register Weekday_alarm

Table 32 describes the bit configuration of the Weekday_alarm register.

Table 32. Weekday_alarm - weekday alarm register (address 0Fh) bit description

Bit	Symbol	Value	Description
7	AEN_W		**Weekday alarm**
		0	Enabled
		1[1]	Disabled
6 to 3	-	0	Unused

All information provided in this document is subject to legal disclaimers.

© 2026 NXP B.V. All rights reserved.

Table 32. Weekday_alarm - weekday alarm register (address 0Fh) bit description...*continued*

Bit	Symbol	Value	Description
2 to 0	WEEKDAY_ALARM	0[1] to 6	**Weekday alarm information** coded in BCD format

[1] Default value.

7.5.6 Alarm function

By clearing the alarm enable bit (AEN_x) of one or more of the alarm registers, the corresponding alarm condition(s) are active. When an alarm occurs, AF is set to logic 1. The asserted AF can be used to generate an interrupt ($\overline{INT}$). The AF is cleared by command.

The registers at addresses 0Bh through 0Fh contain alarm information. When one or more of these registers is loaded with second, minute, hour, day or weekday, and its corresponding AEN_x is logic 0, then that information is compared with the current second, minute, hour, day, and weekday. When all enabled comparisons first match, the alarm flag (AF in register Control_2) is set to logic 1.

The generation of interrupts from the alarm function is controlled via bit AIE. If bit AIE is enabled, the $\overline{INT}$ pin follows the condition of bit AF. AF remains set until cleared by command. Once AF has been cleared, it is set again when the time increments to match the alarm condition once more. Alarm registers, which have their AEN_x bit at logic 1 are ignored.

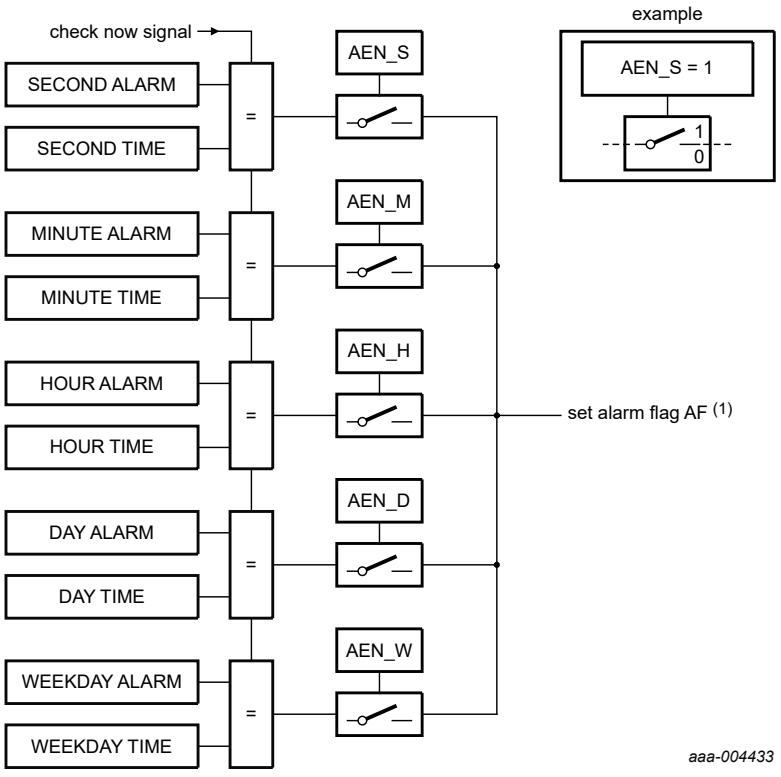

1. Only when all enabled alarm settings are matching.

It is only on increment to a matched case that the alarm flag is set.

Figure 14. Alarm function block diagram

7.6 Timer registers

The 8-bit countdown timer at address 10h is controlled by the register Timer_mode at address 11h.

All information provided in this document is subject to legal disclaimers.

© 2026 NXP B.V. All rights reserved.

7.6.1 Register Timer_value

Table 33 describes the bit configuration of the Timer_value register.

Table 33. Timer_value - timer value register (address 10h) bit description

Bit	Symbol	Value	Description
7 to 0	T[7:0]	0h[1] to FFh	**Countdown timer value**[2]

[1] Default value.

[2] Countdown period in seconds: $CountdownPeriod = \frac{T}{SourceClockFrequency}$ where T is the countdown value.

7.6.2 Register Timer_mode

Table 34 describes the bit configuration of the Timer_mode register.

Table 34. Timer_mode - timer control register (address 11h) bit description

Bit	Symbol	Value	Description
7 to 5	-	000	Unused
4 to 3	TCF[1:0]		**Timer clock frequency**
		00	4.096 kHz timer source clock
		01	64 Hz timer source clock
		10	1 Hz timer source clock
		11[1]	$^1/_{60}$ Hz timer source clock
2	TE		**Timer enable**
		0[1]	Timer is disabled
		1	Timer is enabled
1	TIE		**Timer interrupt enable**
		0[1]	No interrupt generated from timer
		1	Interrupt generated from timer
0	TI_TP[2]		**Timer interrupt mode**
		0[1]	Interrupt follows timer flag
		1	Interrupt generates a pulse

[1] Default value.

[2] How the setting of TI_TP and the timer flag TF can affect the $\overline{INT}$ pulse generation is explained in Section 7.2.2.3.

7.6.3 Timer functions

The timer has four selectable source clocks allowing for countdown periods in the range from 244 µs to 4 hours 15 min. For periods longer than 4 hours, the alarm function can be used.

All information provided in this document is subject to legal disclaimers.

© 2026 NXP B.V. All rights reserved.

Table 35. Timer clock frequency and timer durations

TCF[1:0]	Timer source clock frequency[1]	Delay	
		Minimum timer duration T = 1	Maximum timer duration T = 255
00	4.096 kHz	244 µs	62.256 ms
01	64 Hz	15.625 ms	3.984 s
10	1 Hz[2]	1 s	255 s
11	$^1/_{60}$ Hz[2]	60 s	4 hours 15 min

[1] When not in use, TCF[1:0] must be set to $^1/_{60}$ Hz for Powersaving.
[2] Time periods can be affected by correction pulses.

Remark: Note that all timings, which are generated from the 32.768 kHz oscillator are based on the assumption that there is 0 ppm deviation. Deviation in oscillator frequency results in deviation in timings. This is not applicable to interface timing.

The timer counts down from a software-loaded 8-bit binary value, T[7:0], in register Timer_value. Loading the counter with 0 stops the timer. Values from 1 to 255 are valid.

When the counter decrements from 1, the timer flag (bit TF in register Control_2) is set and the counter automatically re-loads and starts the next timer period.

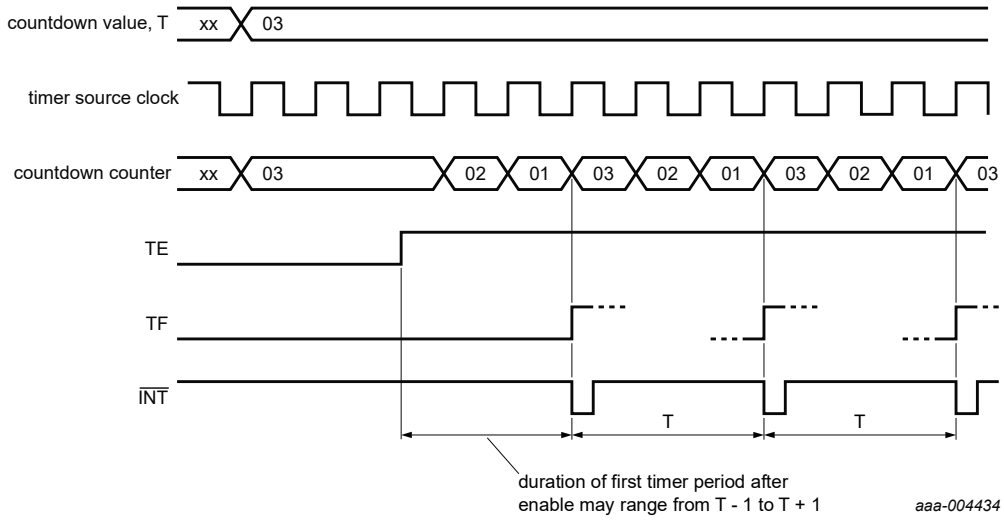

In this example, it is assumed that the timer flag is cleared before the next countdown period expires and that the pin $\overline{INT}$ is set to pulsed mode.

Figure 15. General countdown timer behavior

If a new value of T is written before the end of the current timer period, then this value takes immediate effect. NXP does not recommend changing T without first disabling the counter by setting bit TE logic 0. The update of T is asynchronous to the timer clock. Therefore, changing it without setting bit TE logic 0 can result in a corrupted value loaded into the countdown counter. This results in an undetermined countdown period for the first period. The countdown value T will, however, be correctly stored and correctly loaded on subsequent timer periods.

When the TIE flag is set, an interrupt signal on $\overline{INT}$ is generated if this mode is enabled. See Section 7.2.2 for details on how the interrupt can be controlled.

When starting the timer for the first time, the first period has an uncertainty. The uncertainty is a result of the enable instruction being generated from the interface clock, which is asynchronous from the timer source clock.

All information provided in this document is subject to legal disclaimers.

© 2026 NXP B.V. All rights reserved.

Subsequent timer periods do not have such delay. The amount of delay for the first timer period depends on the chosen source clock, see Table 36.

Table 36. First period delay for timer counter value T

Timer source clock	Minimum timer period	Maximum timer period
4.096 kHz	T	T + 1
64 Hz	T	T + 1
1 Hz	$(T-1)+\frac{1}{64\text{Hz}}$	$T+\frac{1}{64\text{Hz}}$
$^1/_{60}$ Hz	$(T-1)+\frac{1}{64\text{Hz}}$	$T+\frac{1}{64\text{Hz}}$

At the end of every countdown, the timer sets the countdown timer flag (bit TF in register Control_2). Bit TF can only be cleared by command. The asserted bit TF can be used to generate an interrupt at pin $\overline{\text{INT}}$. The interrupt can be generated as a pulsed signal every countdown period or as a permanently active signal, which follows the condition of bit TF. Bit TI_TP is used to control this mode selection and the interrupt output can be disabled with bit TIE, see Table 34 and Figure 15.

When reading the timer, the current countdown value is returned and **not** the initial value T. Since it is not possible to freeze the countdown timer counter during read back, it is recommended to read the register twice and check for consistent results.

Timer source clock frequency selection of 1 Hz and $^1/_{60}$ Hz is affected by the Offset register. The duration of a program period varies according to when the offset is initiated. For example, if a 100 s timer is set using the 1 Hz clock as source, then some 100 s periods contain correction pulses and therefore be longer or shorter depending on the setting of the Offset register. See Section 7.2.3 to understand the operation of the Offset register.

7.6.3.1 Countdown timer interrupts

The pulse generator for the countdown timer interrupt uses an internal clock and depends on the selected source clock for the countdown timer and on the countdown value T. As a consequence, the width of the interrupt pulse varies (see Table 37).

Table 37. $\overline{\text{INT}}$ operation

TF and $\overline{\text{INT}}$ become active simultaneously.

Source clock (Hz)	$\overline{\text{INT}}$ period (s)	
	T = 1[1]	T > 1[1]
4 096	$^1/_{8\,192}$	$^1/_{4\,096}$
64	$^1/_{128}$	$^1/_{64}$
1	$^1/_{64}$	$^1/_{64}$
$^1/_{60}$	$^1/_{64}$	$^1/_{64}$

[1] T = loaded countdown value. Timer stops when T = 0.

8 Characteristics of the I²C-bus interface

The I²C-bus is for bidirectional, two-line communication between different ICs or modules. The two lines are a Serial Data line (SDA) and a Serial Clock line (SCL). Both lines must be connected to a positive supply via a pullup resistor. Data transfer can be initiated only when the bus is not busy.

All information provided in this document is subject to legal disclaimers.

© 2026 NXP B.V. All rights reserved.

8.1 Bit transfer

One data bit is transferred during each clock pulse. The data on the SDA line must remain stable during the HIGH period of the clock pulse, as changes in the data line during this time are interpreted as a control signal (see Figure 16).

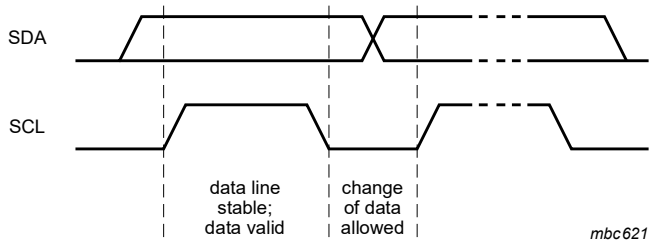

Figure 16. Bit transfer

8.2 START and STOP conditions

Both data and clock lines remain HIGH when the bus is not busy.

A HIGH-to-LOW transition of the data line while the clock is HIGH is defined as the START condition - S.

A LOW-to-HIGH transition of the data line while the clock is HIGH is defined as the STOP condition - P (see Figure 17).

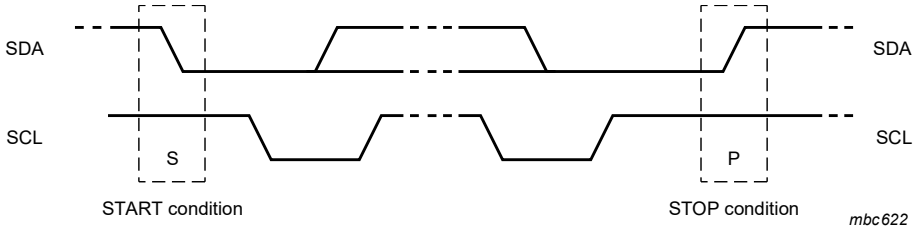

Figure 17. Definition of START and STOP conditions

8.3 System configuration

A device generating a message is a transmitter; a device receiving a message is a receiver. The device that controls the message is the controller; and the devices, which are controlled by the controller are the followers (see Figure 18).

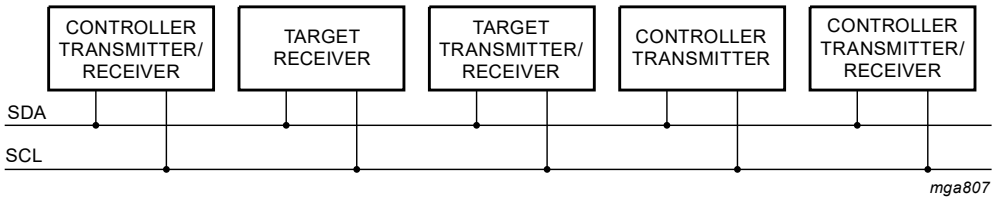

Figure 18. System configuration

8.4 Acknowledge

The number of data bytes transferred between the START and STOP conditions from transmitter to receiver is unlimited. Each byte of 8 bits is followed by an acknowledge cycle.

- A target receiver, which is addressed, must generate an acknowledge after the reception of each byte

All information provided in this document is subject to legal disclaimers.

© 2026 NXP B.V. All rights reserved.

- Also a controller receiver must generate an acknowledge after the reception of each byte that has been clocked out of the target transmitter
- The device that acknowledges must pull down the SDA line during the acknowledge clock pulse, so that the SDA line is stable LOW during the HIGH period of the acknowledge related clock pulse (set-up and hold times must be considered)
- A controller receiver must signal an end of data to the transmitter by not generating an acknowledge on the last byte that has been clocked out of the target. In this event, the transmitter must leave the data line HIGH to enable the controller to generate a STOP condition

Acknowledgment on the I²C-bus is shown in Figure 19.

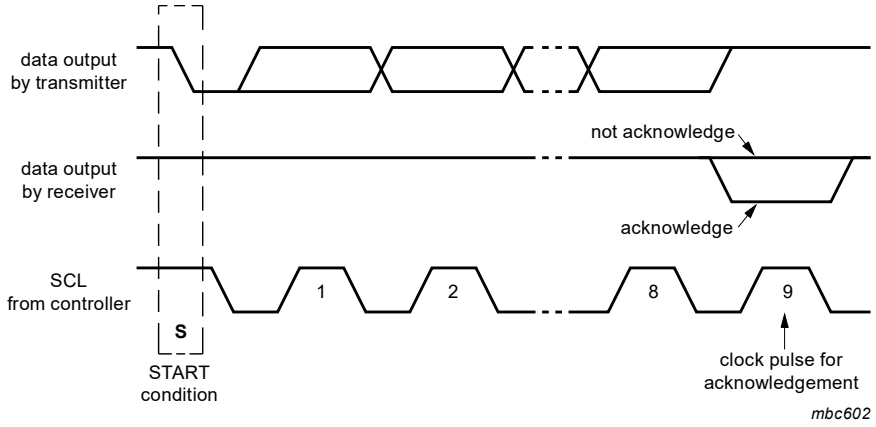

Figure 19. Acknowledgment on the I²C-bus

8.5 I²C-bus protocol

This section covers the following:

- Section 8.5.1 "Addressing"
- Section 8.5.2 "Clock and calendar READ or WRITE cycles"
- Section 8.5.3 "I2C-bus error recovery technique"

8.5.1 Addressing

One I²C-bus target address (1010 001) is reserved for the PCA85073A. The entire I²C-bus target address byte is shown in Table 38.

Table 38. I²C target address byte

	Target address							
Bit	7	6	5	4	3	2	1	0
	MSB							LSB
	1	0	1	0	0	0	1	R/$\overline{W}$

After a START condition, the I²C target address has to be sent to the PCA85073A device.

The R/$\overline{W}$ bit defines the direction of the following single or multiple byte data transfer (R/$\overline{W}$ = 0 for writing, R/$\overline{W}$ = 1 for reading). For the format and the timing of the START condition (S), the STOP condition (P) and the acknowledge bit (A) refer to the I²C-bus characteristics (see ref.[2]). In the write mode, a data transfer is terminated by sending either the STOP condition or the START condition of the next data transfer.

All information provided in this document is subject to legal disclaimers.

© 2026 NXP B.V. All rights reserved.

8.5.2 Clock and calendar READ or WRITE cycles

The I²C-bus configuration for the different PCA85073A READ and WRITE cycles is shown in Figure 20 and Figure 21. The register address is a 5-bit value that defines which register is to be accessed next. The upper 3 bits of the register address are not used.

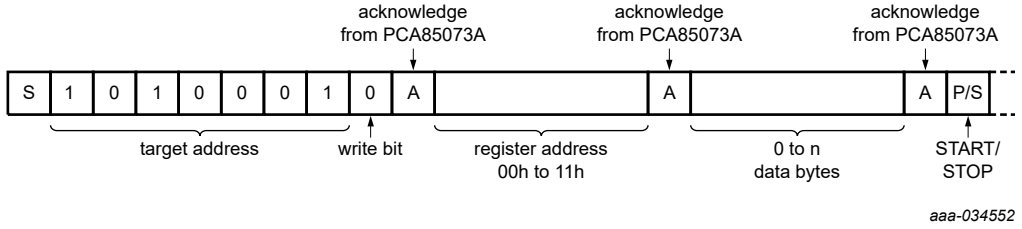

Figure 20. Controller transmits to target receiver (WRITE mode)

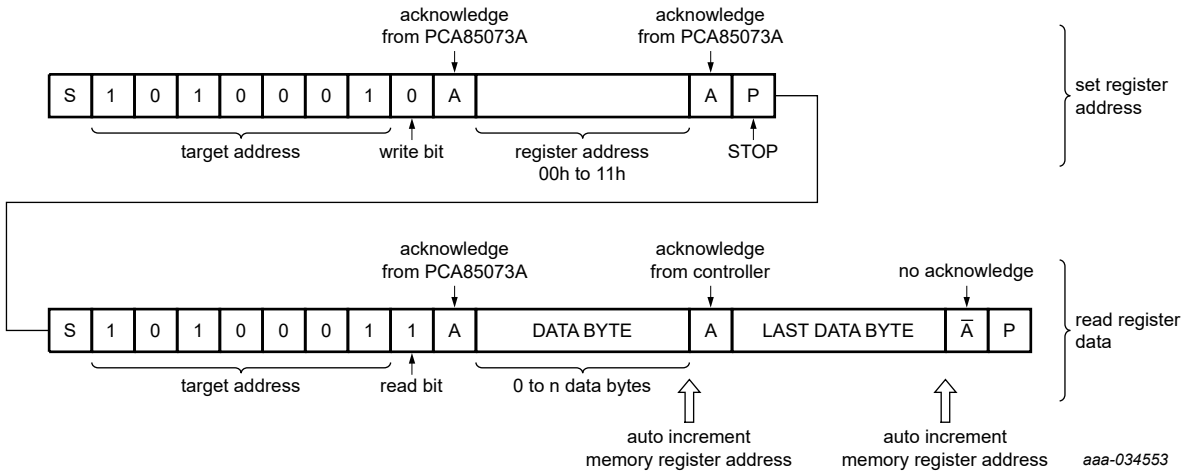

For multimaster configurations and to fasten the communication, the STOP-START sequence can be replaced by a repeated START (Sr).

Figure 21. Controller reads after setting register address (write register address; READ data)

8.5.3 I²C-bus error recovery technique

Target devices like the PCA85073A use a state machine to implement the I²C protocol and expect a certain sequence of events to occur to function properly. Unexpected events at the I²C controller can wreak havoc with the followers connected on the bus. However, it is possible to recover deterministically to a known bus state with careful protocol manipulation.

A deterministic method to clear this situation if SDA is stuck LOW (it effectively blocks any other I2C-bus transaction, once the controller recognizes a ‘stuck bus’ state), is for the controller to blindly transmit nine clocks on SCL. If the target was transmitting data or acknowledging, nine or more clocks ensure the target state machine returns to a known, idle state since the protocol calls for eight data bits and one ACK bit. It does not matter when the target state machine finishes its transmission; extra clocks are recognized as STOP conditions.

With careful design of the bus controller error recovery firmware, many I²C-bus protocol problems can be avoided.

S/W considerations: NXP recommends that customers allow for S/W reset capability to enable the bus error recovery technique. The 9-clock pulse method as described above involves a bus-controller capable of providing such a signal.

All information provided in this document is subject to legal disclaimers.

© 2026 NXP B.V. All rights reserved.

Further comments and additional information are available in ref.[3] and ref.[2]"UM10204".

9 Internal circuitry

This section shows the labeled device diode protection diagram of PCA85073A.

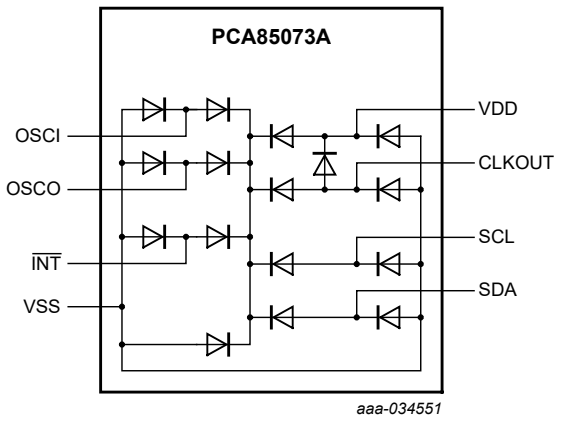

Figure 22. Device diode protection diagram of PCA85073A

10 Safety notes

CAUTION



This device is sensitive to ElectroStatic Discharge (ESD). Observe precautions for handling electrostatic sensitive devices.

Such precautions are described in the *ANSI/ESD S20.20, IEC/ST 61340-5, JESD625-A* or equivalent standards.

11 Limiting values

Table 39 describes the limiting values of PCA85073A.

Table 39. Limiting values[1]

In accordance with the Absolute Maximum Rating System (IEC 60134).

Symbol	Parameter	Conditions	Note	Min	Max	Unit
V_{DD}	Supply voltage			-0.5	+6.5	V
I_{DD}	Supply current			-50	+50	mA
V_I	Input voltage	On pins SCL, SDA, OSCI		-0.5	+6.5	V
V_O	Output voltage			-0.5	+6.5	V
I_I	Input current	At any input		-10	+10	mA
I_O	Output current	At any output		-10	+10	mA
P_{tot}	Total power dissipation			-	300	mW
T_{stg}	Storage temperature		[2]	-65	+150	°C
T_{amb}	Ambient temperature	Operating device		-40	+105	°C

All information provided in this document is subject to legal disclaimers.

© 2026 NXP B.V. All rights reserved.

[1] Remark: The PCA85073A part is not guaranteed (nor characterized) above the operating range as denoted in the data sheet. NXP recommends not to bias the PCA85073A device during reflow (for example, if using a 'coin' type battery in the assembly). If the customer so chooses to continue to use this assembly method, there must be the allowance for a full \Q0 V' level power supply \Qreset' to re-enable the device. Without a proper POR, the device can remain in an indeterminate state.

[2] According to the store and transport requirements (see ref.[4]) the devices have to be stored at a temperature of +8 °C to +45 °C and a humidity of 25 % to 75 %.

12 Characteristics

This section provides an overview of the characteristics of the following:

- Table 40
- Table 41

Table 40. Static characteristics

V_{DD} = 0.9 V to 5.5 V; V_{SS} = 0 V; T_{amb} = -40 °C to +105 °C; f_{osc} = 32.768 kHz; quartz R_s = 60 kΩ; C_L = 7 pF; unless otherwise specified.

Symbol	Parameter	Conditions	Note	Min	Typ	Max	Unit
Supplies							
V_{DD}	Supply voltage	Interface inactive; f_{SCL} = 0 Hz	[1]	0.9	-	5.5	V
		Interface active; f_{SCL} = 400 kHz	[1]	1.8	-	5.5	V
I_{DD}	Supply current	CLKOUT disabled; V_{DD} = 5 V	[2]				
		Interface inactive; f_{SCL} = 0 Hz					
		T_{amb} = 25 °C		-	250	450	nA
		T_{amb} = 85 °C		-	550	750	nA
		T_{amb} = 105 °C		-	900	1 800	nA
		interface active; f_{SCL} = 400 kHz		-	35	50	µA
Inputs[3]							
V_I	Input voltage			V_{SS}	-	5.5	V
V_{IL}	LOW-level input voltage			V_{SS}	-	$0.3V_{DD}$	V
V_{IH}	HIGH-level input voltage			$0.7V_{DD}$	-	V_{DD}	V
I_{LI}	Input leakage current	V_I = V_{SS} or V_{DD}		-0.3	0	+0.3	µA
C_i	Input capacitance		[4]	-	-	7	pF
Outputs							
V_{OH}	HIGH-level output voltage	On pin CLKOUT		$0.8V_{DD}$	-	V_{DD}	V
V_{OL}	LOW-level output voltage	On pins SDA, $\overline{INT}$, CLKOUT		V_{SS}	-	$0.2V_{DD}$	V
I_{OH}	HIGH-level output current	Output source current; V_{OH} = 4.6 V; V_{DD} = 5 V; on pin CLKOUT		1	3	-	mA

All information provided in this document is subject to legal disclaimers.

© 2026 NXP B.V. All rights reserved.

Table 40. Static characteristics...*continued*

V_{DD} = 0.9 V to 5.5 V; V_{SS} = 0 V; T_{amb} = -40 °C to +105 °C; f_{osc} = 32.768 kHz; quartz R_s = 60 kΩ; C_L = 7 pF; unless otherwise specified.

Symbol	Parameter	Conditions	Note	Min	Typ	Max	Unit
I_{OL}	LOW-level output current	Output sink current; V_{OL} = 0.4 V; V_{DD} = 5 V					
		On pin SDA		3	8.5	-	mA
		On pin $\overline{INT}$		2	6	-	mA
		On pin CLKOUT		1	3	-	mA
Oscillator							
$\Delta f_{osc}/f_{osc}$	Relative oscillator frequency variation	ΔV_{DD} = 200 mV; T_{amb} = 25 °C		-	0.075	-	ppm
$C_{L(itg)}$	Integrated load capacitance	On pins OSCO, OSCI	[5]				
		C_L = 7 pF		4.2	7	9.8	pF
		C_L = 12.5 pF		7.5	12.5	17.5	pF
R_s	Series resistance			-	-	100	kΩ

[1] For reliable oscillator startup at power on use V_{DD} greater than 1.2 V. If powered up at 0.9 V the oscillator starts but it can be a bit slow, especially if at high temperature. Normally the power supply is not 0.9 V at startup and only comes at the end of battery discharge. V_{DD} min of 0.9 V is specified so that the customer can calculate how large a battery or capacitor they need for their application. V_{DD} min of 1.2 V or greater is needed to ensure speedy oscillator startup time. For a restart condition, NXP recommends a full '0 V' V_{DD} value upon re-biasing.

[2] Timer source clock = $^1/_{60}$ Hz, level of pins SCL and SDA is V_{DD} or V_{SS}.

[3] The I²C-bus interface of the PCA85073A is 5 V tolerant.

[4] Implicit by design.

[5] Integrated load capacitance, $C_{L(itg)}$, is a calculation of C_{OSCI} and C_{OSCO} in series: $C_{L(itg)} = \frac{(C_{OSCI} C_{OSCO})}{(C_{OSCI} + C_{OSCO})}$.

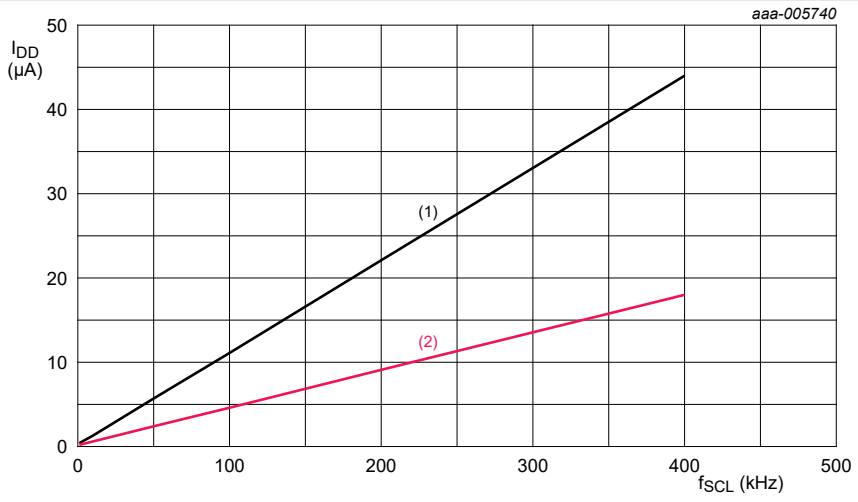

T_{amb} = 25 °C; CLKOUT disabled.

1. V_{DD} = 5.0 V.
2. V_{DD} = 3.3 V.

Figure 23. Typical I_{DD} with respect to f_{SCL}

All information provided in this document is subject to legal disclaimers.

© 2026 NXP B.V. All rights reserved.

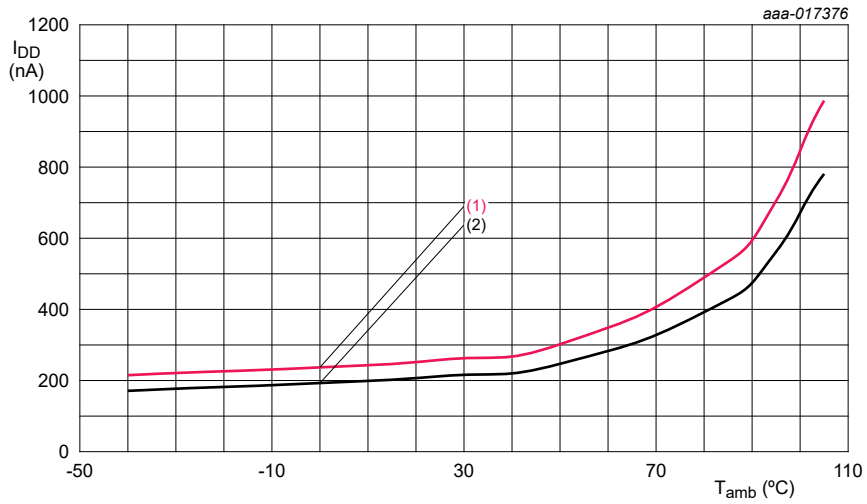

$C_{L(itg)}$ = 7 pF; CLKOUT disabled.

1. V_{DD} = 5.5 V.
2. V_{DD} = 3.3 V.

Figure 24. Typical I_{DD} as a function of temperature when Control_1.CAP_SEL = 0b

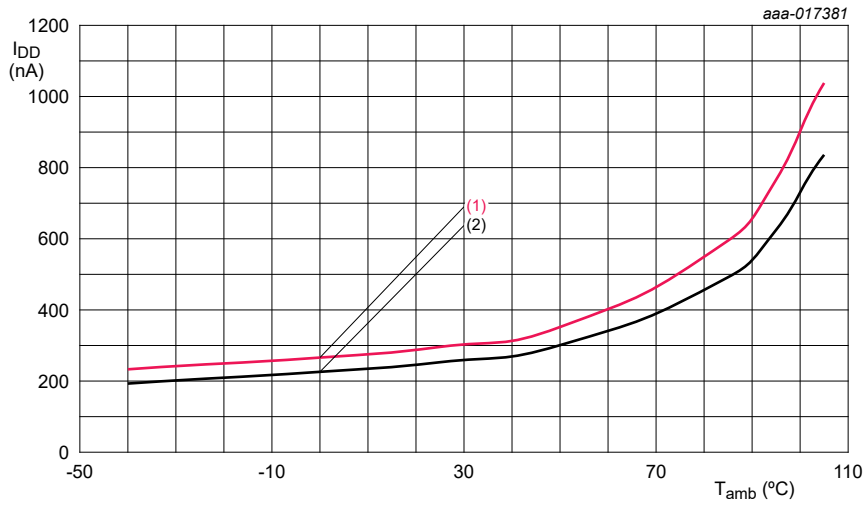

$C_{L(itg)}$ = 12.5 pF; CLKOUT disabled.

1. V_{DD} = 5.5 V.
2. V_{DD} = 3.3 V.

Figure 25. Typical I_{DD} as a function of temperature when Control_1.CAP_SEL = 1b

All information provided in this document is subject to legal disclaimers.

© 2026 NXP B.V. All rights reserved.

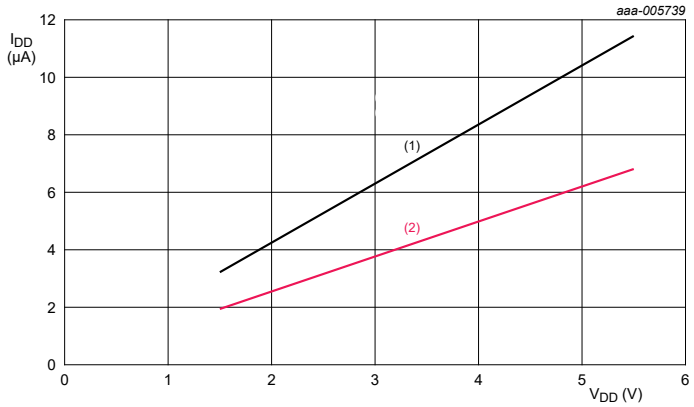

T_{amb} = 25 °C; f_{CLKOUT} = 32 768 Hz.

1. 47 pF CLKOUT load.
2. 22 pF CLKOUT load.

Figure 26. Typical I_{DD} with respect to V_{DD} when Control_2.COF = 000b

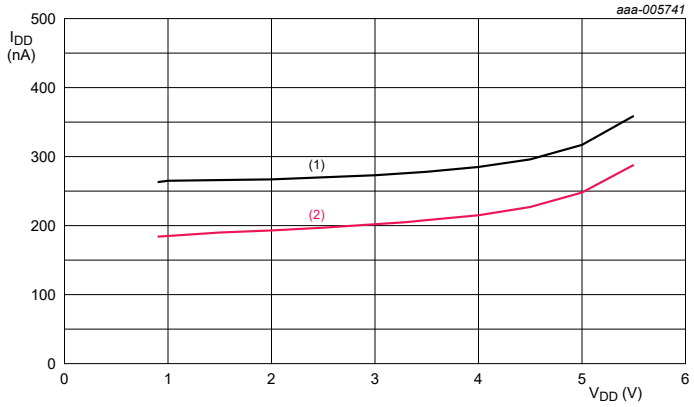

T_{amb} = 25 °C; CLKOUT disabled.

1. $C_{L(itg)}$ = 12.5 pF.
2. $C_{L(itg)}$ = 7 pF.

Figure 27. Typical I_{DD} with respect to V_{DD} when Control_2.COF = 111b

All information provided in this document is subject to legal disclaimers.

© 2026 NXP B.V. All rights reserved.

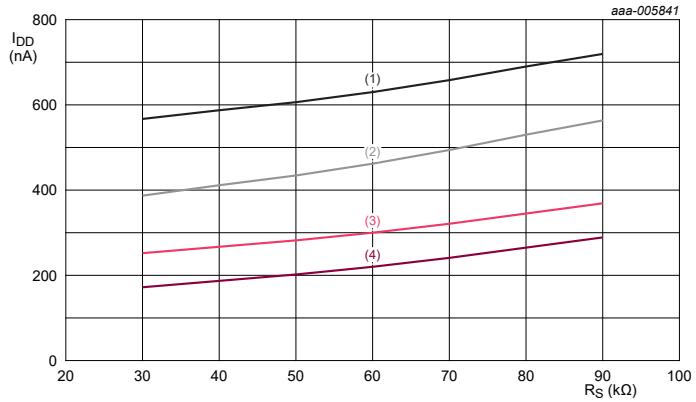

V_{DD} = 5 V; CLKOUT disabled.

1. $C_{L(itg)}$ = 12.5 pF; 50 °C; maximum value.
2. $C_{L(itg)}$ = 7 pF; 50 °C; maximum value.
3. $C_{L(itg)}$ = 12.5 pF; 25 °C; typical value.
4. $C_{L(itg)}$ = 7 pF; 25 °C; typical value.

Figure 28. I_{DD} with respect to quartz R_S

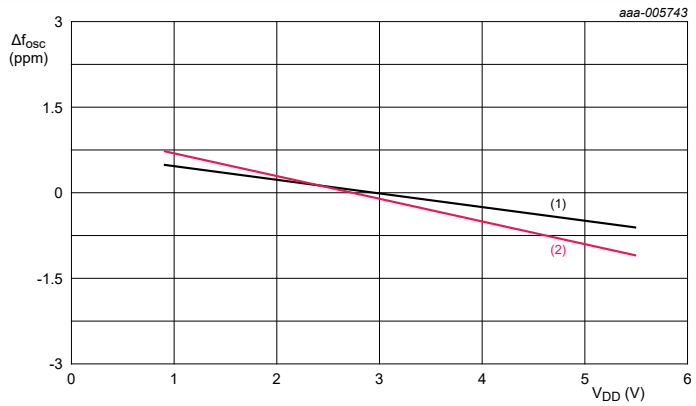

T_{amb} = -40 °C to +105 °C.

1. $C_{L(itg)}$ = 7 pF.
2. $C_{L(itg)}$ = 12.5 pF.

Figure 29. Oscillator frequency variation with respect to V_{DD}

Table 41. I²C-bus characteristics

V_{DD} = 1.8 V to 5.5 V; V_{SS} = 0 V; T_{amb} = -40 °C to +105 °C; f_{osc} = 32.768 kHz; quartz R_s = 60 kΩ; C_L = 7 pF; unless otherwise specified. All timing values are valid within the operating supply voltage and temperature range and referenced to V_{IL} and V_{IH} with an input voltage swing of V_{SS} to V_{DD}[1].

Symbol	Parameter	Conditions		Min	Max	Unit
C_b	Capacitive load for each bus line			-	400	pF
f_{SCL}	SCL clock frequency		[2]	0	400	kHz
$t_{HD;STA}$	Hold time (repeated) START condition			0.6	-	µs

All information provided in this document is subject to legal disclaimers.

© 2026 NXP B.V. All rights reserved.

Table 41. I²C-bus characteristics...*continued*

V_{DD} = 1.8 V to 5.5 V; V_{SS} = 0 V; T_{amb} = -40 °C to +105 °C; f_{osc} = 32.768 kHz; quartz R_s = 60 kΩ; C_L = 7 pF; unless otherwise specified. All timing values are valid within the operating supply voltage and temperature range and referenced to V_{IL} and V_{IH} with an input voltage swing of V_{SS} to V_{DD}[1].

Symbol	Parameter	Conditions		Min	Max	Unit
$t_{SU;STA}$	Set-up time for a repeated START condition			0.6	-	µs
t_{LOW}	LOW period of the SCL clock			1.3	-	µs
t_{HIGH}	HIGH period of the SCL clock			0.6	-	µs
t_r	Rise time of both SDA and SCL signals			20	300	ns
t_f	Fall time of both SDA and SCL signals		[3] [4]	20 × (VDD/5.5 V)	300	ns
t_{BUF}	Bus free time between a STOP and START condition			1.3	-	µs
$t_{SU;DAT}$	Data set-up time			100	-	ns
$t_{HD;DAT}$	Data hold time			0	-	ns
$t_{SU;STO}$	Set-up time for STOP condition			0.6	-	µs
$t_{VD;DAT}$	Data valid time			0	0.9	µs
$t_{VD;ACK}$	Data valid acknowledge time			0	0.9	µs
t_{SP}	Pulse width of spikes that must be suppressed by the input filter			0	50	ns

[1] A detailed description of the I²C-bus specification is given in ref.[2].
[2] I²C-bus access time between two STARTs or between a START and a STOP condition to this device must be less than one second.
[3] A device must internally provide a hold time of at least 300 ns for the SDA signal (with respect to the $V_{IH(min)}$ of the SCL signal) to bridge the undefined region of the falling edge of SCL.
[4] The maximum t_f for the SDA and SCL bus lines is specified at 300 ns. The maximum fall time for the SDA output stage t_f is specified at 250 ns. This allows series protection resistors to be connected in between the SDA and the SCL pins and the SDA/SCL bus lines without exceeding the maximum specified t_f.

All information provided in this document is subject to legal disclaimers.

© 2026 NXP B.V. All rights reserved.

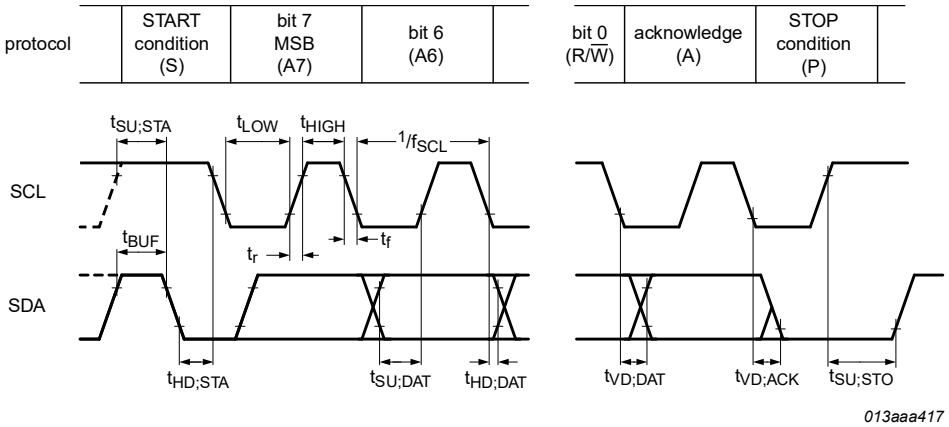

Figure 30. I²C-bus timing diagram; rise and fall times refer to 30 % and 70 %

13 Application information

Figure 31 shows the application diagram for PCA85073A.

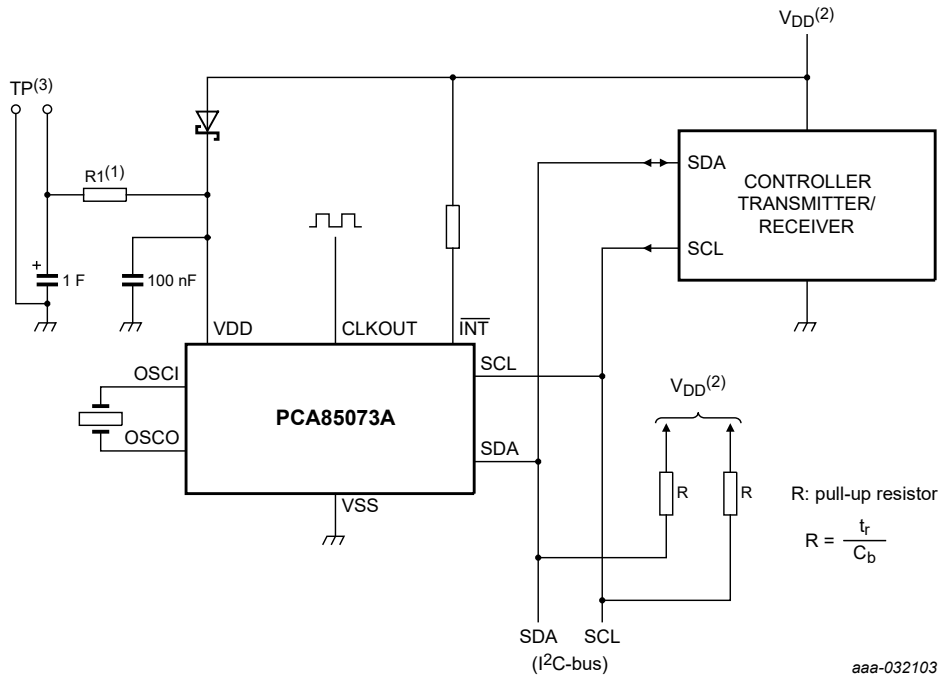

A 1 farad super capacitor combined with a low V_F diode can be used as a standby or back-up supply. With the RTC in its minimum power configuration that is, timer off and CLKOUT off, the RTC can operate for weeks.

1. R1 limits the inrush current to the super capacitor at power on.
2. NXP recommends tying the V_{DD} of the device and V_{DD} of all the external pullup resistors to the same power supply.
3. NXP also recommends the customer place accessible 'Pads/TP-test point' on the layout so as to enable a 'hard' grounding of the power supply V_{DD} in the event a full discharge cannot be attained.

Figure 31. Application diagram for PCA85073A

All information provided in this document is subject to legal disclaimers.

© 2026 NXP B.V. All rights reserved.

14 Test information

14.1 Quality information

This product has been qualified in accordance with the Automotive Electronics Council (AEC) standard *Q100 - Failure mechanism based stress test qualification for integrated circuits*, and is suitable for use in automotive applications.

15 Package outline

This section shows the package outline for the PCA85073A.

TSSOP8: plastic thin shrink small outline package; 8 leads; body width 3 mm **SOT505-1**

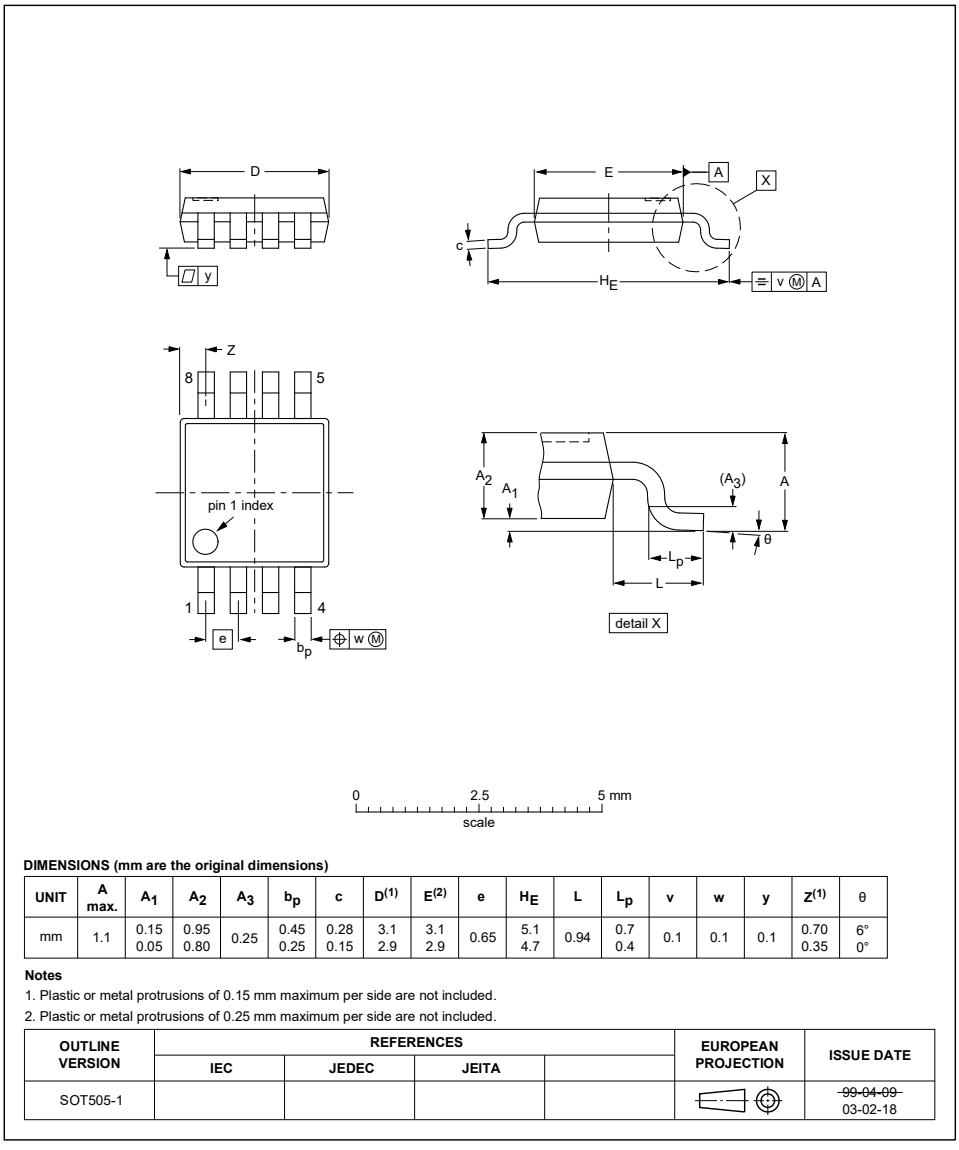

DIMENSIONS (mm are the original dimensions)

UNIT	A max.	A_1	A_2	A_3	b_p	c	$D^{(1)}$	$E^{(2)}$	e	H_E	L	L_p	v	w	y	$Z^{(1)}$	θ
mm	1.1	0.15 0.05	0.95 0.80	0.25	0.45 0.25	0.28 0.15	3.1 2.9	3.1 2.9	0.65	5.1 4.7	0.94	0.7 0.4	0.1	0.1	0.1	0.70 0.35	6° 0°

Notes

1. Plastic or metal protrusions of 0.15 mm maximum per side are not included.
2. Plastic or metal protrusions of 0.25 mm maximum per side are not included.

OUTLINE VERSION	REFERENCES				EUROPEAN PROJECTION	ISSUE DATE
	IEC	JEDEC	JEITA			
SOT505-1						~~99-04-09~~ 03-02-18

Figure 32. Package outline SOT505-1 (TSSOP8)

All information provided in this document is subject to legal disclaimers.

© 2026 NXP B.V. All rights reserved.

16 Handling information

All input and output pins are protected against ElectroStatic Discharge (ESD) under normal handling. When handling Metal-Oxide Semiconductor (MOS) devices ensure that all normal precautions are taken as described in *JESD625-A*, *IEC 61340-5* or equivalent standards.

17 Packing information

This section provides tape and reel information for the PCA85073A.

17.1 Tape and reel information

For tape and reel packing information, see ref.[1].

18 Soldering of SMD packages

This text provides a very brief insight into a complex technology. A more in-depth account of soldering ICs can be found in Application Note *AN10365 "Surface mount reflow soldering description"*.

18.1 Introduction to soldering

Soldering is one of the most common methods through which packages are attached to Printed Circuit Boards (PCBs), to form electrical circuits. The soldered joint provides both the mechanical and the electrical connection. There is no single soldering method that is ideal for all IC packages. Wave soldering is often preferred when through-hole and Surface Mount Devices (SMDs) are mixed on one printed wiring board; however, it is not suitable for fine pitch SMDs. Reflow soldering is ideal for the small pitches and high densities that come with increased miniaturization.

18.2 Wave and reflow soldering

Wave soldering is a joining technology in which the joints are made by solder coming from a standing wave of liquid solder. The wave soldering process is suitable for the following:

- Through-hole components
- Leaded or leadless SMDs, which are glued to the surface of the printed circuit board

Not all SMDs can be wave soldered. Packages with solder balls, and some leadless packages which have solder lands underneath the body, cannot be wave soldered. Also, leaded SMDs with leads having a pitch smaller than ~0.6 mm cannot be wave soldered, due to an increased probability of bridging.

The reflow soldering process involves applying solder paste to a board, followed by component placement and exposure to a temperature profile. Leaded packages, packages with solder balls, and leadless packages are all reflow solderable.

Key characteristics in both wave and reflow soldering are:

- Board specifications, including the board finish, solder masks and vias
- Package footprints, including solder thieves and orientation
- The moisture sensitivity level of the packages
- Package placement
- Inspection and repair
- Lead-free soldering versus SnPb soldering

All information provided in this document is subject to legal disclaimers.

© 2026 NXP B.V. All rights reserved.

18.3 Wave soldering

Key characteristics in wave soldering are:

- Process issues, such as application of adhesive and flux, clinching of leads, board transport, the solder wave parameters, and the time during which components are exposed to the wave
- Solder bath specifications, including temperature and impurities

18.4 Reflow soldering

Key characteristics in reflow soldering are:

- Lead-free versus SnPb soldering; note that a lead-free reflow process usually leads to higher minimum peak temperatures (see Figure 33) than a SnPb process, thus reducing the process window
- Solder paste printing issues including smearing, release, and adjusting the process window for a mix of large and small components on one board
- Reflow temperature profile; this profile includes preheat, reflow (in which the board is heated to the peak temperature) and cooling down. It is imperative that the peak temperature is high enough for the solder to make reliable solder joints (a solder paste characteristic). In addition, the peak temperature must be low enough that the packages and/or boards are not damaged. The peak temperature of the package depends on package thickness and volume and is classified in accordance with Table 42 and Table 43

Table 42. SnPb eutectic process (from J-STD-020D)

Package thickness (mm)	Package reflow temperature (°C)	
	Volume (mm³)	
	< 350	≥ 350
< 2.5	235	220
≥ 2.5	220	220

Table 43. Lead-free process (from J-STD-020D)

Package thickness (mm)	Package reflow temperature (°C)		
	Volume (mm³)		
	< 350	350 to 2000	> 2000
< 1.6	260	260	260
1.6 to 2.5	260	250	245
> 2.5	250	245	245

Moisture sensitivity precautions, as indicated on the packing, must be respected at all times.

Studies have shown that small packages reach higher temperatures during reflow soldering, see Figure 33.

All information provided in this document is subject to legal disclaimers.

© 2026 NXP B.V. All rights reserved.

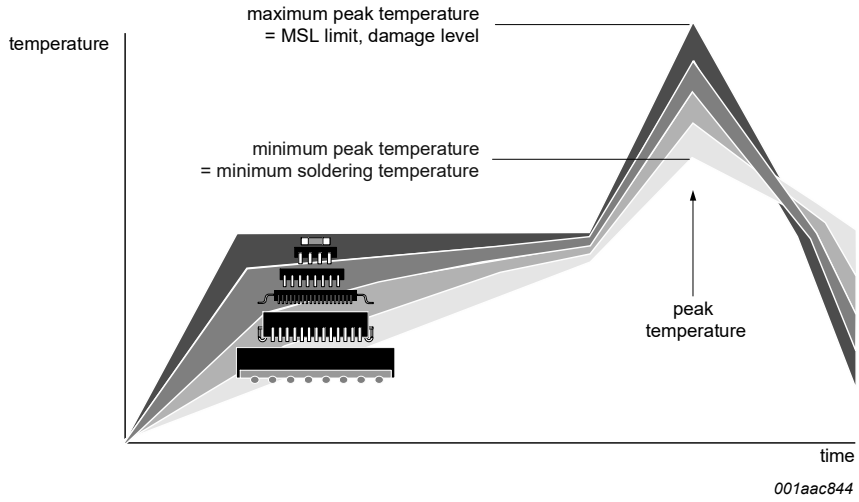

MSL: Moisture Sensitivity Level

Figure 33. Temperature profiles for large and small components

For further information on temperature profiles, refer to Application Note *AN10365 "Surface mount reflow soldering description"*.

19 Footprint information

This section shows the footprint information for the PCA85073A.

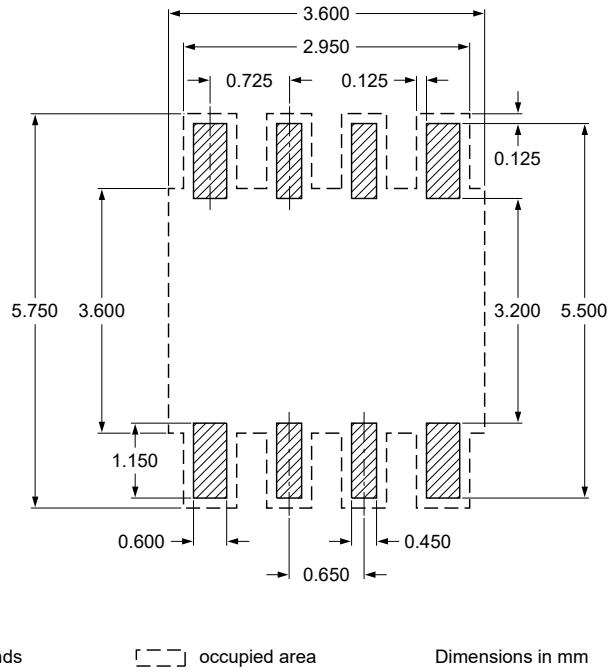

Figure 34. Footprint information for reflow soldering of SOT505-1 (TSSOP8)

20 Acronyms

This section lists the acronyms used in this document.

All information provided in this document is subject to legal disclaimers.

© 2026 NXP B.V. All rights reserved.

Table 44. Acronyms

Acronym	Description
AF	Alarm Flag
ANSI	American National Standards Institute
BCD	Binary Coded Decimal
CDM	Charged-Device Model
CMOS	Complementary Metal Oxide Semiconductor
ESD	ElectroStatic Discharge
Fm+	Fast Mode Plus
HBM	Human-Body Model
HMI	Half Minute Interrupt
I^2C	Inter-Integrated Circuit
IC	Integrated Circuit
LSB	Least Significant Bit
MSB	Most Significant Bit
MSL	Moisture Sensitivity Level
PCB	Printed-Circuit Board
POR	Power-on Reset
RTC	Real-Time Clock
SCL	Serial Clock line
SDA	Serial Data line
SMD	Surface Mount Device
SPI	Serial Peripheral Interface
SSB	Static Shielding Bag

21 References

This section lists the references used to supplement this document.

[1] **SOT505-1_118** TSSOP8; Reel pack; SMD, 13", packing information
[2] **UM10204** I^2C-bus specification and user manual
[3] **UM10301** User Manual for NXP Real Time Clocks PCF85x3, PCA8565 and PCF2123, PCA2125
[4] **UM10569** Store and transport requirements

All information provided in this document is subject to legal disclaimers.

© 2026 NXP B.V. All rights reserved.

22 Revision history

Table 45 summarizes the revisions to this document.

Table 45. Revision history

Document ID	Release date	Description
PCA85073A v.1.4	14 July 2026	Updated per CIN# 202607006I: • Table 40 • Minor editorial changes
PCA85073A v.1.3	15 September 2025	• Updated per CIN# 202508017I – Fixed figure captions from Figure 24 to Figure 27.
PCA85073A v.1.2	1 September 2025	• Updated per CIN# 202508017I – Updated Table 40: Corrected Min and Max values from -/+0.15 to -/+0.22 for I_{LI}.
PCA85073A v.1.1	13 June 2025	• Updated per CIN# 202503027I – Table 15: Corrected value from 2 to 4 in “Update every nth minute”. – The terms "master" and "slave" replaced by "controller" and "target" to comply with NXP's inclusive language policy.
PCA85073A v.1.0	4 October 2019	• Initial version

23 Appendix

This section outlines the selection of RTCs.

23.1 RTC selection

This section describes the selection of RTCs.

Table 46. Selection of RTCs

Type name	Alarm, Timer, Watchdog	Interrupt output	Interface	I_{DD}, typical (nA)	Battery backup	Timestamp, tamper input	AEC-Q100 compliant	Special features	Packages
PCF85063TP	-	1	I²C	220	-	-	-	Basic functions only, no alarm	HXSON8
PCF85063A	X	1	I²C	220	-	-	-	Tiny package	SO8, DFN2626-10, TSSOP8
PCF85063B	X	1	SPI	220	-	-	-	Tiny package	DFN2626-10
PCF85263A	X	2	I²C	230	X	X	-	Timestamp, battery backup, stopwatch $^{1}/_{100}$ s	SO8, TSSOP10, TSSOP8, DFN2626-10
PCF85363A	X	2	I²C	230	X	X	-	Timestamp, battery backup, stopwatch $^{1}/_{100}$ s, 64-Byte RAM	TSSOP10, TSSOP8, DFN2626-10
PCF2123	X	1	SPI	100	-	-	-	Lowest power 100 nA in operation	TSSOP14, HVQFN16
PCF8523	X	2	I²C	150	X	-	-	Lowest power 150 nA in operation, Fm+ 1 MHz	SO8, HVSON8, TSSOP14, WLCSP
PCF8563	X	1	I²C	250	-	-	-	-	SO8, TSSOP8, HVSON10
PCA8565	X	1	I²C	600	-	-	Grade 1	High robustness, T_{amb}= -40 °C to 125 °C	TSSOP8, HVSON10
PCA8565A	X	1	I²C	600	-	-	-	Integrated oscillator caps, T_{amb}= -40 °C to 125 °C	WLCSP
PCF8564A	X	1	I²C	250	-	-	-	Integrated oscillator caps	WLCSP
PCF2127	X	1	I²C and SPI	500	X	X	-	Temperature compensated, quartz built in, calibrated, 512-Byte RAM	SO16

All information provided in this document is subject to legal disclaimers.

© 2026 NXP B.V. All rights reserved.

Table 46. Selection of RTCs*...continued*

Type name	Alarm, Timer, Watchdog	Interrupt output	Interface	I_{DD}, typical (nA)	Battery backup	Timestamp, tamper input	AEC-Q100 compliant	Special features	Packages
PCF2127A	X	1	I^2C and SPI	500	X	X	-	Temperature compensated, quartz built in, calibrated, 512-Byte RAM	SO20
PCF2129	X	1	I^2C and SPI	500	X	X	-	Temperature compensated, quartz built in, calibrated	SO16
PCF2129A	X	1	I^2C and SPI	500	X	X	-	Temperature compensated, quartz built in, calibrated	SO20
PCA2129	X	1	I^2C and SPI	500	X	X	Grade 3	Temperature compensated, quartz built in, calibrated	SO16
PCA21125	X	1	SPI	820	-	-	Grade 1	High robustness, T_{amb}= -40 °C to 125 °C	TSSOP14

All information provided in this document is subject to legal disclaimers.

© 2026 NXP B.V. All rights reserved.

Legal information

Data sheet status

Document status[1][2]	Product status[3]	Definition
Objective [short] data sheet	Development	This document contains data from the objective specification for product development.
Preliminary [short] data sheet	Qualification	This document contains data from the preliminary specification.
Product [short] data sheet	Production	This document contains the product specification.

[1] Please consult the most recently issued document before initiating or completing a design.
[2] The term 'short data sheet' is explained in section "Definitions".
[3] The product status of device(s) described in this document may have changed since this document was published and may differ in case of multiple devices. The latest product status information is available on the Internet at URL https://www.nxp.com.

Definitions

Draft — A draft status on a document indicates that the content is still under internal review and subject to formal approval, which may result in modifications or additions. NXP Semiconductors does not give any representations or warranties as to the accuracy or completeness of information included in a draft version of a document and shall have no liability for the consequences of use of such information.

Short data sheet — A short data sheet is an extract from a full data sheet with the same product type number(s) and title. A short data sheet is intended for quick reference only and should not be relied upon to contain detailed and full information. For detailed and full information see the relevant full data sheet, which is available on request via the local NXP Semiconductors sales office. In case of any inconsistency or conflict with the short data sheet, the full data sheet shall prevail.

Product specification — The information and data provided in a Product data sheet shall define the specification of the product as agreed between NXP Semiconductors and its customer, unless NXP Semiconductors and customer have explicitly agreed otherwise in writing. In no event however, shall an agreement be valid in which the NXP Semiconductors product is deemed to offer functions and qualities beyond those described in the Product data sheet.

Disclaimers

Limited warranty and liability — Information in this document is believed to be accurate and reliable. However, NXP Semiconductors does not give any representations or warranties, expressed or implied, as to the accuracy or completeness of such information and shall have no liability for the consequences of use of such information. NXP Semiconductors takes no responsibility for the content in this document if provided by an information source outside of NXP Semiconductors.

In no event shall NXP Semiconductors be liable for any indirect, incidental, punitive, special or consequential damages (including - without limitation - lost profits, lost savings, business interruption, costs related to the removal or replacement of any products or rework charges) whether or not such damages are based on tort (including negligence), warranty, breach of contract or any other legal theory.

Notwithstanding any damages that customer might incur for any reason whatsoever, NXP Semiconductors' aggregate and cumulative liability towards customer for the products described herein shall be limited in accordance with the Terms and conditions of commercial sale of NXP Semiconductors.

Right to make changes — NXP Semiconductors reserves the right to make changes to information published in this document, including without limitation specifications and product descriptions, at any time and without notice. This document supersedes and replaces all information supplied prior to the publication hereof.

Applications — Applications that are described herein for any of these products are for illustrative purposes only. NXP Semiconductors makes no representation or warranty that such applications will be suitable for the specified use without further testing or modification.

Customers are responsible for the design and operation of their applications and products using NXP Semiconductors products, and NXP Semiconductors accepts no liability for any assistance with applications or customer product design. It is customer's sole responsibility to determine whether the NXP Semiconductors product is suitable and fit for the customer's applications and products planned, as well as for the planned application and use of customer's third party customer(s). Customers should provide appropriate design and operating safeguards to minimize the risks associated with their applications and products.

NXP Semiconductors does not accept any liability related to any default, damage, costs or problem which is based on any weakness or default in the customer's applications or products, or the application or use by customer's third party customer(s). Customer is responsible for doing all necessary testing for the customer's applications and products using NXP Semiconductors products in order to avoid a default of the applications and the products or of the application or use by customer's third party customer(s). NXP does not accept any liability in this respect.

Limiting values — Stress above one or more limiting values (as defined in the Absolute Maximum Ratings System of IEC 60134) will cause permanent damage to the device. Limiting values are stress ratings only and (proper) operation of the device at these or any other conditions above those given in the Recommended operating conditions section (if present) or the Characteristics sections of this document is not warranted. Constant or repeated exposure to limiting values will permanently and irreversibly affect the quality and reliability of the device.

Terms and conditions of commercial sale — NXP Semiconductors products are sold subject to the general terms and conditions of commercial sale, as published at https://www.nxp.com/profile/terms, unless otherwise agreed in a valid written individual agreement. In case an individual agreement is concluded only the terms and conditions of the respective agreement shall apply. NXP Semiconductors hereby expressly objects to applying the customer's general terms and conditions with regard to the purchase of NXP Semiconductors products by customer.

No offer to sell or license — Nothing in this document may be interpreted or construed as an offer to sell products that is open for acceptance or the grant, conveyance or implication of any license under any copyrights, patents or other industrial or intellectual property rights.

All information provided in this document is subject to legal disclaimers.

© 2026 NXP B.V. All rights reserved.

Suitability for use in automotive applications — This NXP product has been qualified for use in automotive applications. If this product is used by customer in the development of, or for incorporation into, products or services (a) used in safety critical applications or (b) in which failure could lead to death, personal injury, or severe physical or environmental damage (such products and services hereinafter referred to as “Critical Applications”), then customer makes the ultimate design decisions regarding its products and is solely responsible for compliance with all legal, regulatory, safety, and security related requirements concerning its products, regardless of any information or support that may be provided by NXP. As such, customer assumes all risk related to use of any products in Critical Applications and NXP and its suppliers shall not be liable for any such use by customer. Accordingly, customer will indemnify and hold NXP harmless from any claims, liabilities, damages and associated costs and expenses (including attorneys’ fees) that NXP may incur related to customer’s incorporation of any product in a Critical Application.

Quick reference data — The Quick reference data is an extract of the product data given in the Limiting values and Characteristics sections of this document, and as such is not complete, exhaustive or legally binding.

Export control — This document as well as the item(s) described herein may be subject to export control regulations. Export might require a prior authorization from competent authorities.

HTML publications — An HTML version, if available, of this document is provided as a courtesy. Definitive information is contained in the applicable document in PDF format. If there is a discrepancy between the HTML document and the PDF document, the PDF document has priority.

Translations — A non-English (translated) version of a document, including the legal information in that document, is for reference only. The English version shall prevail in case of any discrepancy between the translated and English versions.

Security — Customer understands that all NXP products may be subject to unidentified vulnerabilities or may support established security standards or specifications with known limitations. Customer is responsible for the design and operation of its applications and products throughout their lifecycles to reduce the effect of these vulnerabilities on customer’s applications and products. Customer’s responsibility also extends to other open and/or proprietary technologies supported by NXP products for use in customer’s applications. NXP accepts no liability for any vulnerability. Customer should regularly check security updates from NXP and follow up appropriately.

Customer shall select products with security features that best meet rules, regulations, and standards of the intended application and make the ultimate design decisions regarding its products and is solely responsible for compliance with all legal, regulatory, and security related requirements concerning its products, regardless of any information or support that may be provided by NXP.

NXP has a Product Security Incident Response Team (PSIRT) (reachable at PSIRT@nxp.com) that manages the investigation, reporting, and solution release to security vulnerabilities of NXP products.

NXP B.V. — NXP B.V. is not an operating company and it does not distribute or sell products.

Trademarks

Notice: All referenced brands, product names, service names, and trademarks are the property of their respective owners.

NXP — wordmark and logo are trademarks of NXP B.V.

I2C-bus — logo is a trademark of NXP B.V.

All information provided in this document is subject to legal disclaimers.

© 2026 NXP B.V. All rights reserved.

Tables

Tab. 1. Ordering information 2
Tab. 2. Ordering options 2
Tab. 3. Pin description 3
Tab. 4. Registers overview 5
Tab. 5. Control_1 - control and status register 1 (address 00h) bit description 5
Tab. 6. First increment of time circuits after STOP bit release 7
Tab. 7. Registers reset values 9
Tab. 8. Control_2 - control and status register 2 (address 01h) bit description 10
Tab. 9. Effect of bits MI and HMI on INT generation 12
Tab. 10. CLKOUT frequency selection 13
Tab. 11. Offset - offset register (address 02h) bit description 13
Tab. 12. Offset values 14
Tab. 13. Correction pulses for MODE = 0 14
Tab. 14. Effect of correction pulses on frequencies for MODE = 0 15
Tab. 15. Correction pulses for MODE = 1 15
Tab. 16. Effect of correction pulses on frequencies for MODE = 1 16
Tab. 17. RAM_byte - 8-bit RAM register (address 03h) bit description 18
Tab. 18. Seconds - seconds register (address 04h) bit description 18
Tab. 19. Seconds coded in BCD format 18
Tab. 20. Minutes - minutes register (address 05h) bit description 19
Tab. 21. Hours - hours register (address 06h) bit description 19
Tab. 22. Days - days register (address 07h) bit description 20
Tab. 23. Weekdays - weekdays register (address 08h) bit description 20
Tab. 24. Weekday assignments 20
Tab. 25. Months - months register (address 09h) bit description 21
Tab. 26. Month assignments in BCD format 21
Tab. 27. Years - years register (0Ah) bit description 21
Tab. 28. Second_alarm - second alarm register (address 0Bh) bit description 23
Tab. 29. Minute_alarm - minute alarm register (address 0Ch) bit description 23
Tab. 30. Hour_alarm - hour alarm register (address 0Dh) bit description 24
Tab. 31. Day_alarm - day alarm register (address 0Eh) bit description 24
Tab. 32. Weekday_alarm - weekday alarm register (address 0Fh) bit description 24
Tab. 33. Timer_value - timer value register (address 10h) bit description 26
Tab. 34. Timer_mode - timer control register (address 11h) bit description 26
Tab. 35. Timer clock frequency and timer durations 27
Tab. 36. First period delay for timer counter value T 28
Tab. 37. INT operation 28
Tab. 38. I2C target address byte 30
Tab. 39. Limiting values 32
Tab. 40. Static characteristics 33
Tab. 41. I2C-bus characteristics 37
Tab. 42. SnPb eutectic process (from J-STD-020D) 42
Tab. 43. Lead-free process (from J-STD-020D) 42
Tab. 44. Acronyms 44
Tab. 45. Revision history 45
Tab. 46. Selection of RTCs 45

Figures

Fig. 1. Block diagram of PCA85073A 3
Fig. 2. Pin configuration for TSSOP8 (PCA85073ADP) 3
Fig. 3. Handling address registers 4
Fig. 4. STOP bit functional diagram 7
Fig. 5. STOP bit release timing 8
Fig. 6. Software reset command 9
Fig. 7. Interrupt scheme 11
Fig. 8. INT example for MI 12
Fig. 9. Offset calibration calculation workflow 17
Fig. 10. Result of offset calibration 17
Fig. 11. OS flag 19
Fig. 12. Data flow for the time function 22
Fig. 13. Access time for read/write operations 22
Fig. 14. Alarm function block diagram 25
Fig. 15. General countdown timer behavior 27
Fig. 16. Bit transfer 29
Fig. 17. Definition of START and STOP conditions 29
Fig. 18. System configuration 29
Fig. 19. Acknowledgment on the I2C-bus 30
Fig. 20. Controller transmits to target receiver (WRITE mode) 31
Fig. 21. Controller reads after setting register address (write register address; READ data) 31
Fig. 22. Device diode protection diagram of PCA85073A 32
Fig. 23. Typical IDD with respect to fSCL 34
Fig. 24. Typical IDD as a function of temperature when Control_1.CAP_SEL = 0b 35
Fig. 25. Typical IDD as a function of temperature when Control_1.CAP_SEL = 1b 35
Fig. 26. Typical IDD with respect to VDD when Control_2.COF = 000b 36
Fig. 27. Typical IDD with respect to VDD when Control_2.COF = 111b 36
Fig. 28. IDD with respect to quartz RS 37

All information provided in this document is subject to legal disclaimers.

© 2026 NXP B.V. All rights reserved.

Fig. 29. Oscillator frequency variation with respect to VDD 37
Fig. 30. I2C-bus timing diagram; rise and fall times refer to 30 % and 70 % 39
Fig. 31. Application diagram for PCA85073A 39
Fig. 32. Package outline SOT505-1 (TSSOP8) 40
Fig. 33. Temperature profiles for large and small components 43
Fig. 34. Footprint information for reflow soldering of SOT505-1 (TSSOP8) 43

All information provided in this document is subject to legal disclaimers.

© 2026 NXP B.V. All rights reserved.

Contents

1 General description 1
2 Features and benefits 1
3 Applications 1
4 Ordering information 2
4.1 Ordering options 2
5 Block diagram 2
6 Pinning information 3
6.1 Pinning 3
6.2 Pin description 3
7 Functional description 4
7.1 Registers organization 4
7.2 Control registers 5
7.2.1 Register Control_1 5
7.2.1.1 EXT_TEST: external clock test mode 6
7.2.1.2 STOP: STOP bit function 7
7.2.1.3 Software reset 9
7.2.2 Register Control_2 10
7.2.2.1 Alarm interrupt 10
7.2.2.2 MI and HMI: minute and a half minute interrupt 12
7.2.2.3 TF: timer flag 12
7.2.2.4 COF[2:0]: Clock output frequency 13
7.2.3 Register Offset 13
7.2.3.1 Correction when MODE = 0 14
7.2.3.2 Correction when MODE = 1 15
7.2.3.3 Offset calibration workflow 16
7.2.4 Register RAM_byte 18
7.3 Time and date registers 18
7.3.1 Register Seconds 18
7.3.1.1 OS: Oscillator stop 19
7.3.2 Register Minutes 19
7.3.3 Register Hours 19
7.3.4 Register Days 20
7.3.5 Register Weekdays 20
7.3.6 Register Months 21
7.3.7 Register Years 21
7.4 Setting and reading the time 22
7.5 Alarm registers 23
7.5.1 Register Second_alarm 23
7.5.2 Register Minute_alarm 23
7.5.3 Register Hour_alarm 23
7.5.4 Register Day_alarm 24
7.5.5 Register Weekday_alarm 24
7.5.6 Alarm function 25
7.6 Timer registers 25
7.6.1 Register Timer_value 26
7.6.2 Register Timer_mode 26
7.6.3 Timer functions 26
7.6.3.1 Countdown timer interrupts 28
8 Characteristics of the I2C-bus interface 28
8.1 Bit transfer 29
8.2 START and STOP conditions 29
8.3 System configuration 29
8.4 Acknowledge 29
8.5 I2C-bus protocol 30
8.5.1 Addressing 30
8.5.2 Clock and calendar READ or WRITE cycles 31
8.5.3 I2C-bus error recovery technique 31
9 Internal circuitry 32
10 Safety notes 32
11 Limiting values 32
12 Characteristics 33
13 Application information 39
14 Test information 40
14.1 Quality information 40
15 Package outline 40
16 Handling information 41
17 Packing information 41
17.1 Tape and reel information 41
18 Soldering of SMD packages 41
18.1 Introduction to soldering 41
18.2 Wave and reflow soldering 41
18.3 Wave soldering 42
18.4 Reflow soldering 42
19 Footprint information 43
20 Acronyms 43
21 References 44
22 Revision history 45
23 Appendix 45
23.1 RTC selection 45
Legal information 47

Please be aware that important notices concerning this document and the product(s) described herein, have been included in section 'Legal information'.

© 2026 NXP B.V. **All rights reserved.**