0.3mm Pitch, 1.0mm Height FPC Connector

FH26 Series

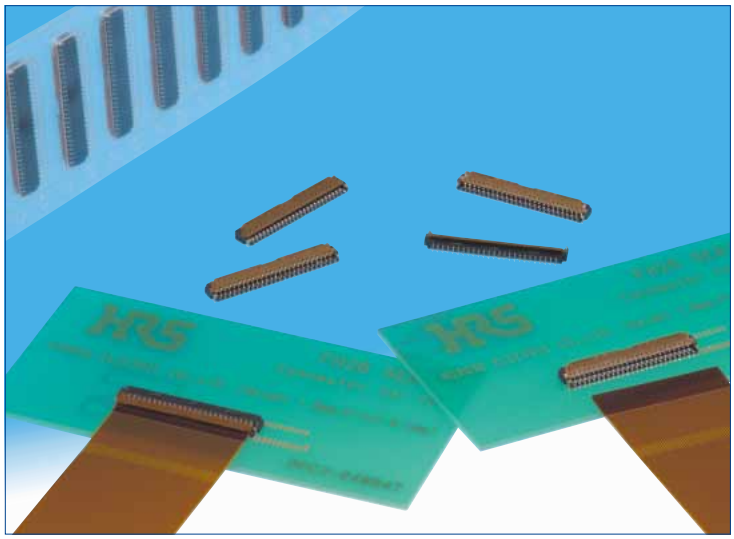

●Space saving(51 pos. shown)

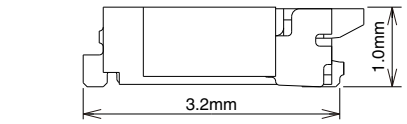

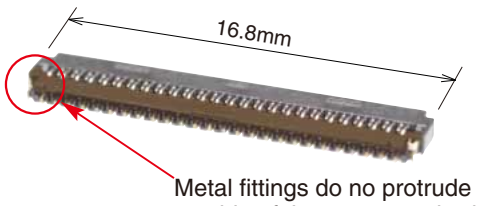

■Features

1. Low-profile 0.3mm pitch FPC connector

Ultra-thin design, 1.0mm height, 3.2mm width all add up to a compact, space saving form factor.

∗30% reduction in PCB footprint

∗40% reduction in weight

(Compared to our 0.3mm pitch FH23 Series 51 position connector.)

2. Easy PCB Mounting

The leads are double sided and have a 0.6mm mounting lead pitch to simplify mounting.

3. Fully molded structure aids PCB layout

The bottom of this connector is enclosed by a fully molded structure that protects the contacts and removes any restrictions from PCB patterning and design.

4. Rotating one-touch ZIF mechanism

The one-touch rotating ZIF mechanism is easier to operate and works with a light force, and a clear tactile click is delivered upon the successful completion of the mating process.

5. Easy FPC insertion

The metal FPC insertion guides helps to make this the FPC insertion process easier.

6. FPC. Accepts standard 0.2mm thick FPC

This connector accepts standard 0.2mm thick FPC. (The proper FPC stiffener thickness will prevent FPC deformation and ease insertion and mating.)

7. Supports automatic pick-n-place mounting

Offered in tape and reel packaging that is compatible with automatic machine mounting. (5,000 pieces per reel)

8. Halogen-free

All materials and substances used to produce this product comply with Halogen-free standards.

∗ Defined according to IEC61249-2-21

Br : 900ppm max, Cl : 900ppm max, Br+Cl : 1,500ppm max.

9. Multiple packing options

The standard packaging is 5,000 pieces per reel, but it is also offered in a 500 piece reel. (The outer diameter of the reel will be ϕ180mm in this case.)

●Can be mounted over conductive traces.

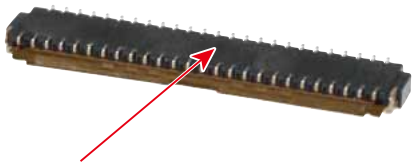

No exposed contacts on the bottom of the connector

●Operation

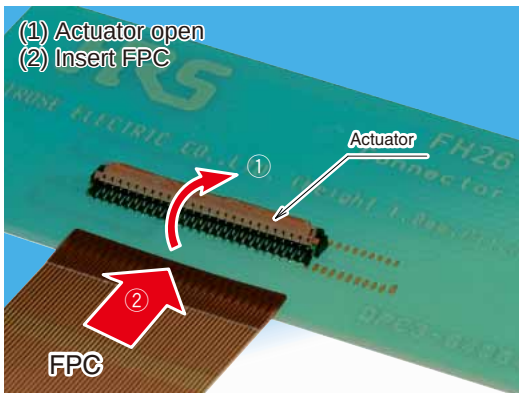

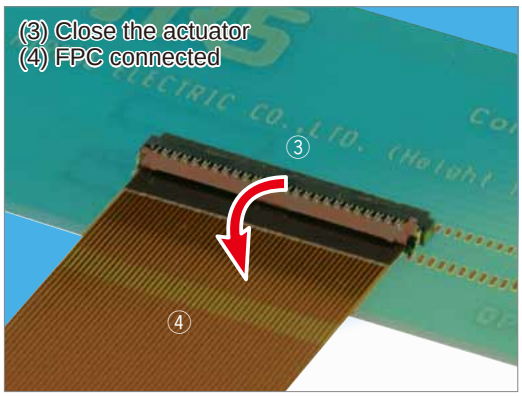

Oct.1.2017 Copyright 2017 HIROSE ELECTRIC CO., LTD. All Rights Reserved.

■Product Specifications

Rating	Current rating 0.2A DC (Note 1) Voltage rating 30V AC	Operating temperature range Operating humidity range	-55℃ to +85℃ (Note 2) Relative humidity 90% max. (No condensation)	Storage temperature range Storage humidity range	-10℃ to +50℃ (Note 3) Relative humidity 90% max.

Recommended FPC :	Thickness : = 0.2±0.03mm gold plated

Item	Specification	Conditions
1. Insulation resistance	50MΩ min.	100V DC
2. Withstanding voltage	No flashover or insulation breakdown.	90V AC /1 minute
3. Contact resistance	100mΩ max. ∗ Including FPC conductor resistance	1mA
4. Durability (Insertion/ withdrawal)	Contact resistance : 100mΩ max. No damage, cracks, or parts dislocation.	10 cycles
5. Vibration	No electrical discontinuity of 1μs or more. Contact resistance : 100mΩ max. No damage, cracks, or parts dislocation.	Frequency : 10 to 55 Hz, single amplitude of 0.75mm, 10 cycles, 3 directions.
6. Shock	No electrical discontinuity of 1μs. min. Contact resistance : 100mΩ max. No damage, cracks, or parts dislocation.	Acceleration of 981 m/s², 6 ms duration, sine half-wave waveform, 3 cycles in each of the 3 axis
7. Humidity (Steady state)	Contact resistance : 100mΩ max. Insulation resistance : 50MΩ min. No affect on appearance or performance.	96 hours at temperature of 40±2℃ and humidity of 90% to 95%.
8. Temperature cycle	Contact resistance : 100mΩ max. Insulation resistance : 50MΩ min. No damage, cracks, or parts looseness.	Temperature : -55 ℃→+15℃ to +35℃→+85℃→+15℃ to +35℃ Time : 30 → 2 to 3 → 30 → 2 to 3 (Minutes) 5 cycles
9. Resistance to soldering heat	No deformation of components affecting performance.	Reflow : At the recommended temperature profile Manual soldering: 350℃ +/-10℃ for 5±1 seconds

Note 1 : When passing the current through all of the contacts, use 70% of the rated current.
Note 2 : Includes temperature rise caused by current flow.
Note 3 : The term "storage" refers to products stored for long period of time prior to mounting and use. Operating Temperature Range and Humidity range covers non- conducting condition of installed connectors in storage, shipment or during transportation.

■Materials / Finish

Part	Material	Finish	Remarks
Insulator	LCP	Color : Black	UL94V-0
	PA	FH26W series : Light brown	UL94HB
Contacts	Phosphor bronze	Gold plating	————
Metalfittings		Pure tin reflow plating	————

■Product Number Structure

Refer to the chart below when determining the product specifications from the product number.
Please select from the product numbers listed in this catalog when placing orders.

FH 26W - 51S - 0.3 SHW (05)
❶ ❷ ❸ ❹ ❺ ❻

❶ Series name : FH	❺ Termination type SHW : SMT horizontal staggered mounting type
❷ Series No. : 26W	❻ Specifications
❸ Number of Contacts : 13 to 71	(60)…Gold plating with nickel barrier, 5,000pcs/reel
❹ Contact pitch : 0.3mm	(97)…Gold plating with nickel barrier, 500pcs/reel

Oct.1.2017 Copyright 2017 HIROSE ELECTRIC CO., LTD. All Rights Reserved.

■Connector Dimensions

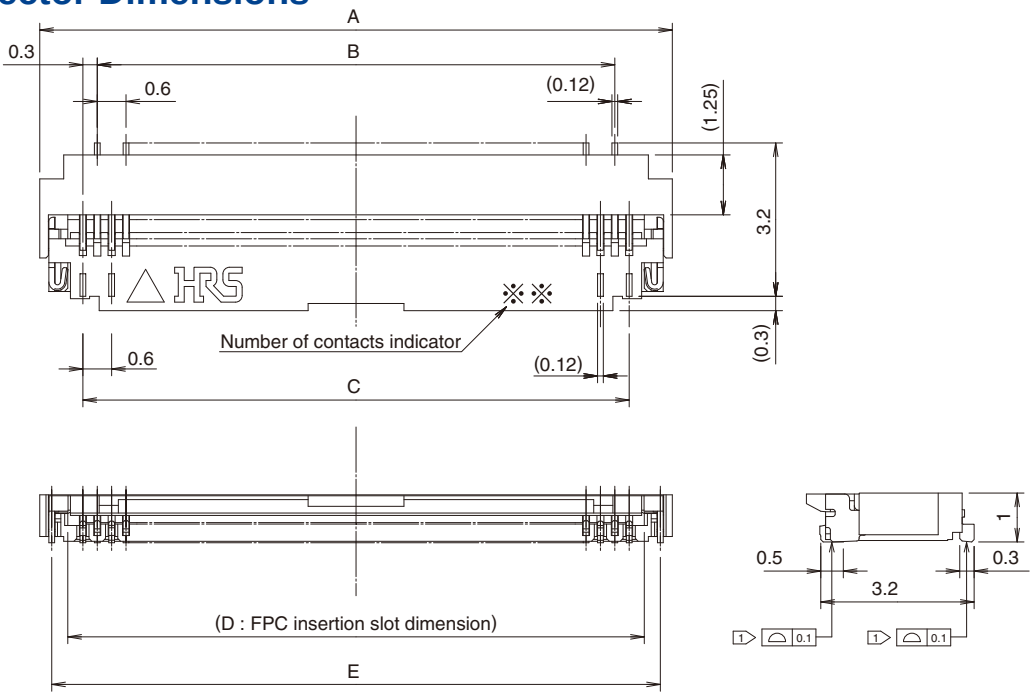

Notes 1 The coplanarity of each terminal lead within specified dimension is 0.1mm Max.
2 Packaged on tape and reel only. Check packaging specification.
3 Slight variations in color of the plastic compounds do not affect form, fit or function of the connector.
4 After reflow, the terminal plating may change color, however this does not represent a quality issue.

All dimensions : mm

Part No.	HRS No.	No. of Contacts	A	B	C	D	E
FH26W-13S-0.3SHW(**)	580-2401-1 **	13	5.4	3	3.6	4.23	4.9
FH26W-15S-0.3SHW(**)	580-2402-4 **	15	6.0	3.6	4.2	4.83	5.5
FH26W-17S-0.3SHW(**)	580-2403-7 **	17	6.6	4.2	4.8	5.43	6.1
FH26W-19S-0.3SHW(**)	580-2437-9 **	19	7.2	4.8	5.4	6.03	6.7
FH26W-21S-0.3SHW(**)	580-2404-0 **	21	7.8	5.4	6.0	6.63	7.3
FH26W-23S-0.3SHW(**)	580-2405-2 **	23	8.4	6.0	6.6	7.23	7.9
FH26W-25S-0.3SHW(**)	580-2406-5 **	25	9.0	6.6	7.2	7.83	8.5
FH26W-27S-0.3SHW(**)	580-2400-9 **	27	9.6	7.2	7.8	8.43	9.1
FH26W-29S-0.3SHW(**)	580-2407-8 **	29	10.2	7.8	8.4	9.03	9.7
FH26W-31S-0.3SHW(**)	580-2408-0 **	31	10.8	8.4	9.0	9.63	10.3
FH26W-33S-0.3SHW(**)	580-2409-3 **	33	11.4	9.0	9.6	10.23	10.9
FH26W-35S-0.3SHW(**)	580-2410-2 **	35	12.0	9.6	10.2	10.83	11.5
FH26W-37S-0.3SHW(**)	580-2411-5 **	37	12.6	10.2	10.8	11.43	12.1
FH26W-39S-0.3SHW(**)	580-2412-8 **	39	13.2	10.8	11.4	12.03	12.7
FH26W-41S-0.3SHW(**)	580-2413-0 **	41	13.8	11.4	12.0	12.63	13.3
FH26W-45S-0.3SHW(**)	580-2414-3 **	45	15.0	12.6	13.2	13.83	14.5
FH26W-51S-0.3SHW(**)	580-2415-6 **	51	16.8	14.4	15.0	15.63	16.3
FH26W-57S-0.3SHW(**)	580-2417-1 **	57	18.6	16.2	16.8	17.43	18.1
FH26W-61S-0.3SHW(**)	580-2418-4 **	61	19.8	17.4	18.0	18.63	19.3
FH26W-71S-0.3SHW(**)	580-2419-7 **	71	22.8	20.4	21.0	21.63	22.3

Note 1 : Embossed tape reel packaging (5,000pcs/reel, 500pcs/reel). Order by number of reels.

Oct.1.2017 Copyright 2017 HIROSE ELECTRIC CO., LTD. All Rights Reserved.

◆Recommended PCB mounting pattern and metal mask dimensions

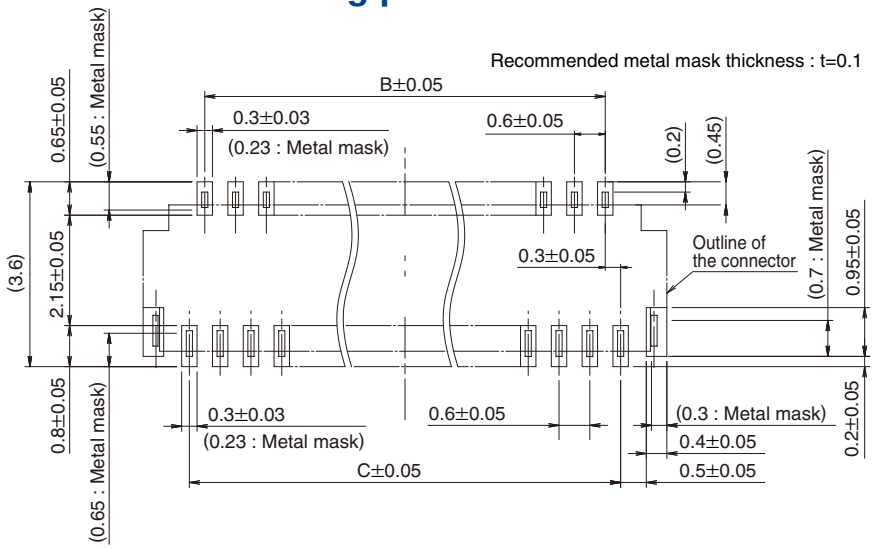

◆Recommended FPC Dimensions

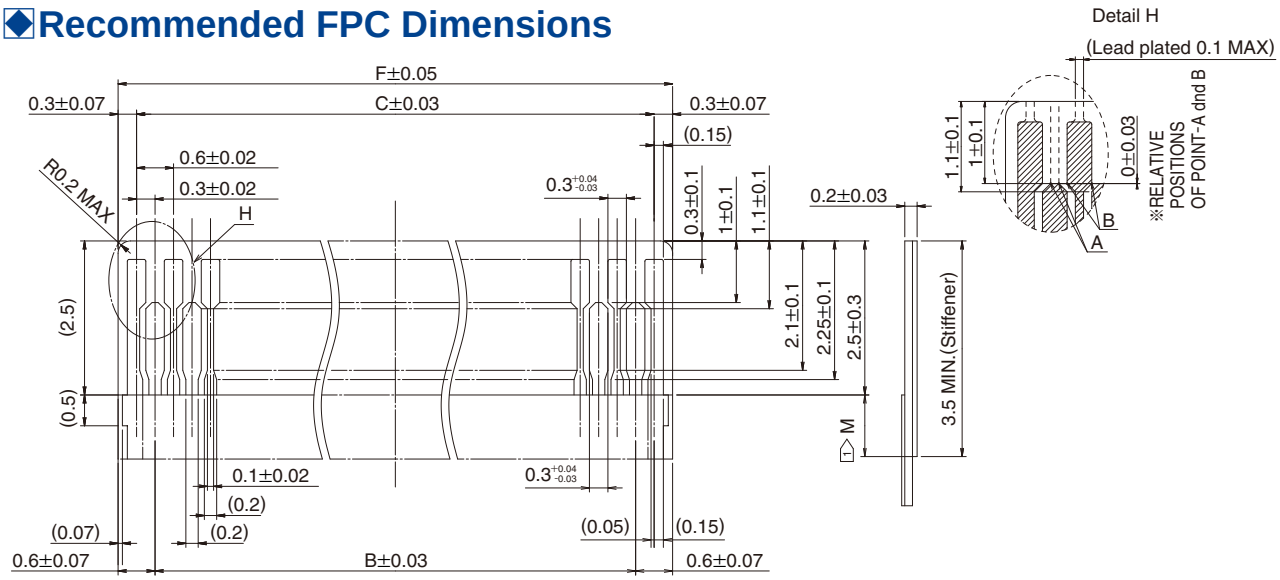

1 Dimention M must be 0.5mm minimum when the stiffener is shorter than 3.5 min.

All dimensions : mm

Part No.	HRS No.	No. of Contacts	B	C	F
FH26W-13S-0.3SHW(**)	580-2401-1 **	13	3.0	3.6	4.2
FH26W-15S-0.3SHW(**)	580-2402-4 **	15	3.6	4.2	4.8
FH26W-17S-0.3SHW(**)	580-2403-7 **	17	4.2	4.8	5.4
FH26W-19S-0.3SHW(**)	580-2437-9 **	19	4.8	5.4	6.0
FH26W-21S-0.3SHW(**)	580-2404-0 **	21	5.4	6.0	6.6
FH26W-23S-0.3SHW(**)	580-2405-2 **	23	6.0	6.6	7.2
FH26W-25S-0.3SHW(**)	580-2406-5 **	25	6.6	7.2	7.8
FH26W-27S-0.3SHW(**)	580-2400-9 **	27	7.2	7.8	8.4
FH26W-29S-0.3SHW(**)	580-2407-8 **	29	7.8	8.4	9.0
FH26W-31S-0.3SHW(**)	580-2408-0 **	31	8.4	9.0	9.6
FH26W-33S-0.3SHW(**)	580-2409-3 **	33	9.0	9.6	10.2
FH26W-35S-0.3SHW(**)	580-2410-2 **	35	9.6	10.2	10.8
FH26W-37S-0.3SHW(**)	580-2411-5 **	37	10.2	10.8	11.4
FH26W-39S-0.3SHW(**)	580-2412-8 **	39	10.8	11.4	12.0
FH26W-41S-0.3SHW(**)	580-2413-0 **	41	11.4	12.0	12.6
FH26W-45S-0.3SHW(**)	580-2414-3 **	45	12.6	13.2	13.8
FH26W-51S-0.3SHW(**)	580-2415-6 **	51	14.4	15.0	15.6
FH26W-57S-0.3SHW(**)	580-2417-1 **	57	16.2	16.8	17.4
FH26W-61S-0.3SHW(**)	580-2418-4 **	61	17.4	18.0	18.6
FH26W-71S-0.3SHW(**)	580-2419-7 **	71	20.4	21.0	21.6

Oct.1.2017 Copyright 2017 HIROSE ELECTRIC CO., LTD. All Rights Reserved.

◆Recommended FPC Construction

●Contact FPC manufacturer for specific details.

1. Using Single-sided FPC

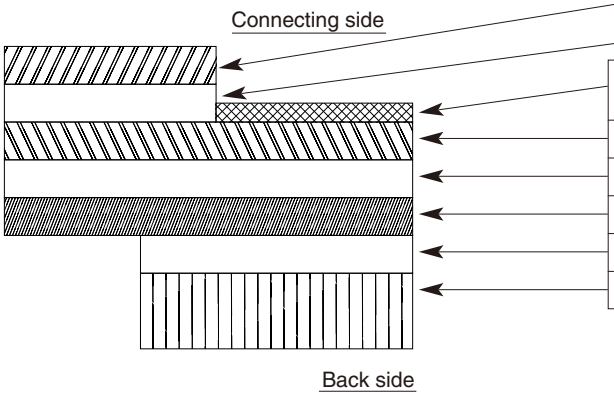

Material Name	Material	Thickness (μm)
Covering film layer.	Polyimide 1 mil thick.	25
Cover adhesive		25
Surface treatment	1μm to 5μm Nickel underplated 0.2μm Gold plated	3
Copper foil	Cu 1oz	35
Base adhesive	Thermosetting adhesive	25
Base film	Polyimide 1 mil thick	25
Reinforcement material adhesive	Thermosetting adhesive	40
Stiffener	Polyimide 3 mil thick	75
	Total	203

2. Using Double-sided FPC

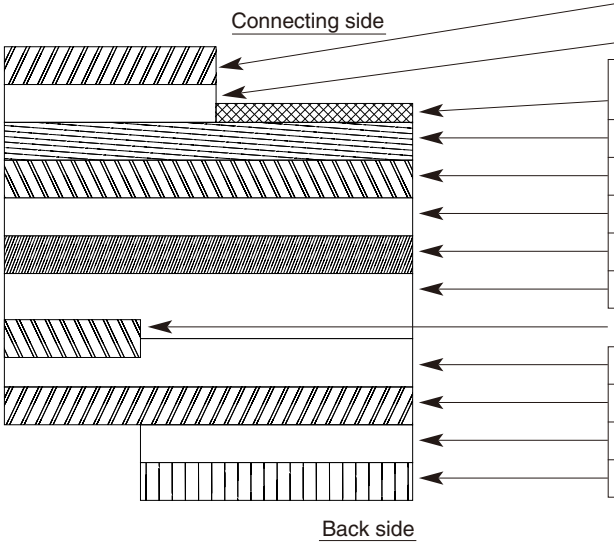

Material Name	Material	Thickness (μm)
Covering layer film	Polyimide 1 mil thick	25
Cover adhesive		25
Surface treatment	1μm to 5μm Nickel underplated 0.2μm Gold plated	3
Through-hole copper	Cu	15
Copper foil	Cu 1/2oz	18
Base adhesive	Thermosetting adhesive	18
Base film	Polyimide 1 mil thick	25
Base adhesive	Thermosetting adhesive	18
Copper foil	Cu 1/2oz	18
Cover adhesive	Thermosetting adhesive	25
Covering layer film	Polyimide 1 mil thick	25
Reinforcement material adhesive	Thermosetting adhesive	25
Stiffener	Polyimide 1 mil thick	25
	Total	197

●To prevent release of the FPC due to it's bending, use of double sided FPC with copper foil on the back side is NOT RECOMMENDED.

3. Precautions

1. This specification is a recommendation for the construction of the FH26 Series FPC (t=0.2 ± 0.03).
2. For details about the construction, please contact the FPC manufacturers.

Oct.1.2017 Copyright 2017 HIROSE ELECTRIC CO., LTD. All Rights Reserved.

◆Packaging Specification

●Embossed Carrier Tape Dimensions (Tape width of 24mm max.)

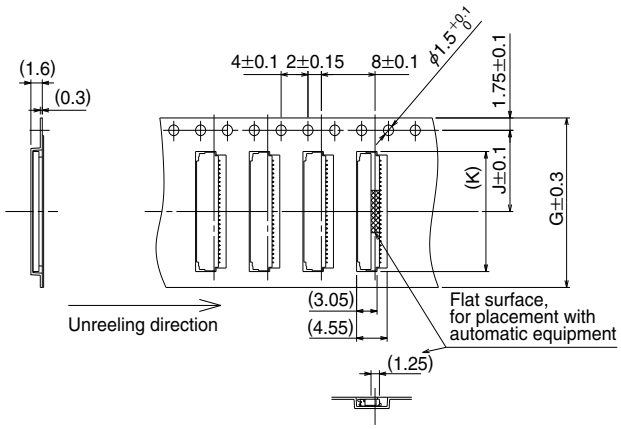

●Embossed Carrier Tape Dimensions (Tape width of 32mm min.)

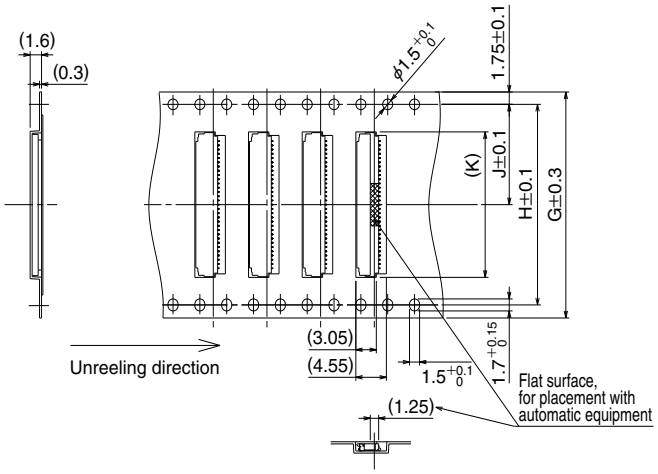

●Reel Dimensions

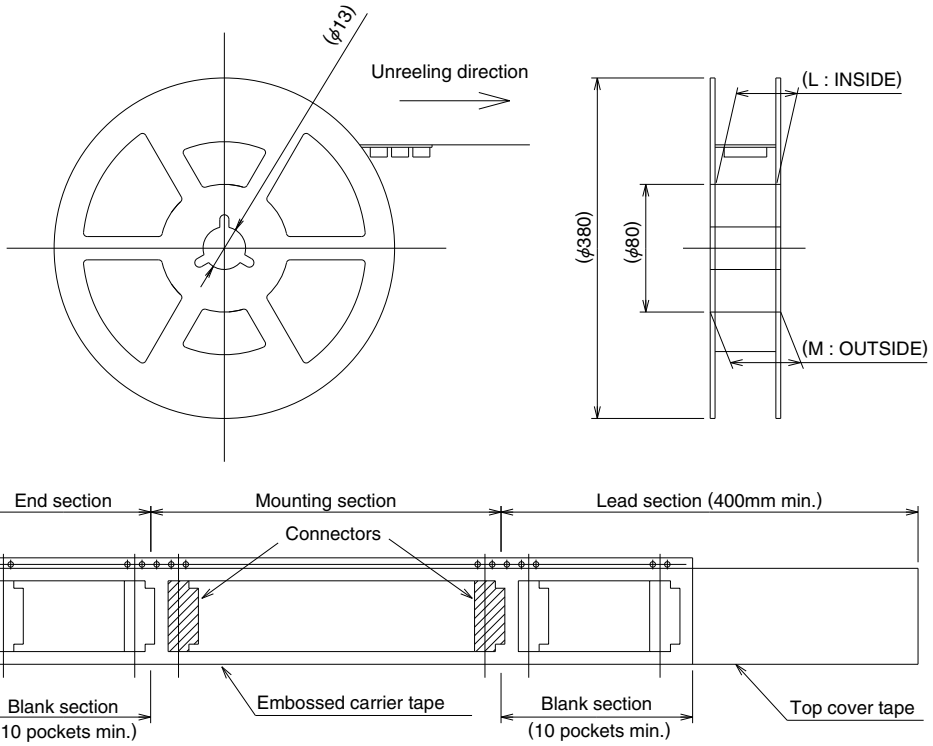

Oct.1.2017 Copyright 2017 HIROSE ELECTRIC CO., LTD. All Rights Reserved.

All dimensions : mm

Part No.	HRS No.	No. of Contacts	G	H	J	K	L	M
FH26W-13S-0.3SHW(**)	580-2401-1 **	13	16	—	7.5	5.6	17.4	21.4
FH26W-15S-0.3SHW(**)	580-2402-4 **	15	16	—	7.5	6.2	17.4	21.4
FH26W-17S-0.3SHW(**)	580-2403-7 **	17	16	—	7.5	6.8	17.4	21.4
FH26W-19S-0.3SHW(**)	580-2437-9 **	19	16	—	7.5	7.4	17.4	21.4
FH26W-21S-0.3SHW(**)	580-2404-0 **	21	16	—	7.5	8.0	17.4	21.4
FH26W-23S-0.3SHW(**)	580-2405-2 **	23	16	—	7.5	8.6	17.4	21.4
FH26W-25S-0.3SHW(**)	580-2406-5 **	25	16	—	7.5	9.2	17.4	21.4
FH26W-27S-0.3SHW(**)	580-2400-9 **	27	16	—	7.5	9.8	17.4	21.4
FH26W-29S-0.3SHW(**)	580-2407-8 **	29	24	—	11.5	10.4	25.4	29.4
FH26W-31S-0.3SHW(**)	580-2408-0 **	31	24	—	11.5	11.0	25.4	29.4
FH26W-33S-0.3SHW(**)	580-2409-3 **	33	24	—	11.5	11.6	25.4	29.4
FH26W-35S-0.3SHW(**)	580-2410-2 **	35	24	—	11.5	12.2	25.4	29.4
FH26W-37S-0.3SHW(**)	580-2411-5 **	37	24	—	11.5	12.8	25.4	29.4
FH26W-39S-0.3SHW(**)	580-2412-8 **	39	24	—	11.5	13.4	25.4	29.4
FH26W-41S-0.3SHW(**)	580-2413-0 **	41	24	—	11.5	14.0	25.4	29.4
FH26W-45S-0.3SHW(**)	580-2414-3 **	45	24	—	11.5	15.2	25.4	29.4
FH26W-51S-0.3SHW(**)	580-2415-6 **	51	24	—	11.5	17.0	25.4	29.4
FH26W-57S-0.3SHW(**)	580-2417-1 **	57	32	28.4	14.2	18.8	33.4	37.4
FH26W-61S-0.3SHW(**)	580-2418-4 **	61	32	28.4	14.2	20.0	33.4	37.4
FH26W-71S-0.3SHW(**)	580-2419-7 **	71	44	40.4	20.2	23.0	45.4	49.4

Recommended Temperature Profile

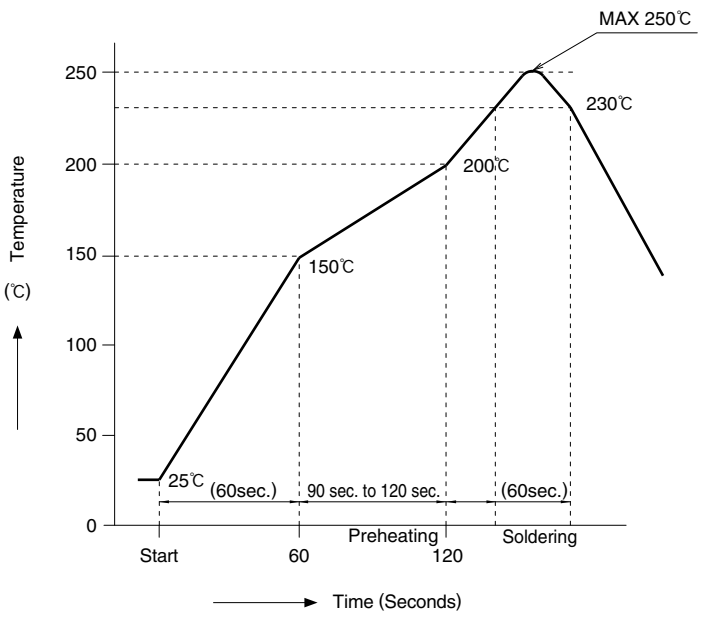

HRS test conditions

Solder method	: Reflow, IR/hot air
Environment	: Room air
Solder composition	: Paste, 96.5%Sn/3.0%Ag/0.5%Cu (Senju Metal Industry, Co., Ltd.'s Part Number: M705-221CM5-32-10.5)
Test board	: Glass epoxy 25mm×50mm×0.8mm thick
Land dimensions	: 0.3mm×0.65mm, 0.3mm×0.8mm
Metal mask	: 0.23×0.55×0.1mm thick, 0.23×0.65×0.1mm thick

The temperature profiles are based on the above conditions.
In individual applications the actual temperature may vary, depending on solder paste type, volume/thickness and board size/thickness. Consult your solder paste and equipment manufacturer for specific recommendations.

Oct.1.2017 Copyright 2017 HIROSE ELECTRIC CO., LTD. All Rights Reserved.

◆Operation and Precautions

Operation

1.FPC insertion procedure. Connector installed on the board.

❶ Lift up the actuator. Use thumb or index finger.

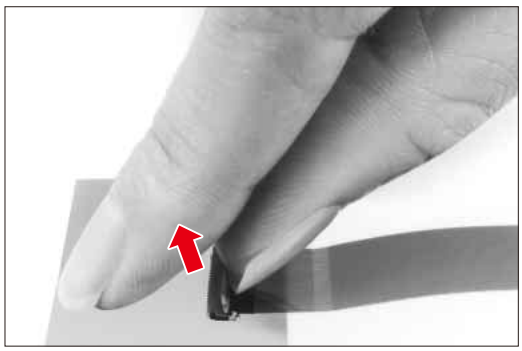

❷ Fully insert the FPC in the connector parallel to mounting surface, with the exposed conductive traces facing down.

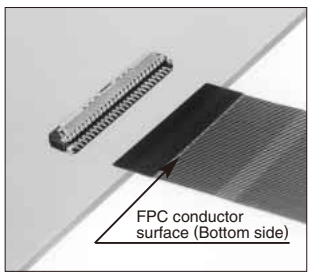

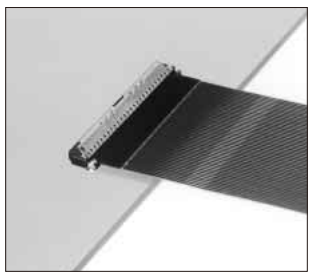

❸ Rotate down the actuator until firmly closed. It is critical that the inserted FPC is not moved and remains fully inserted.

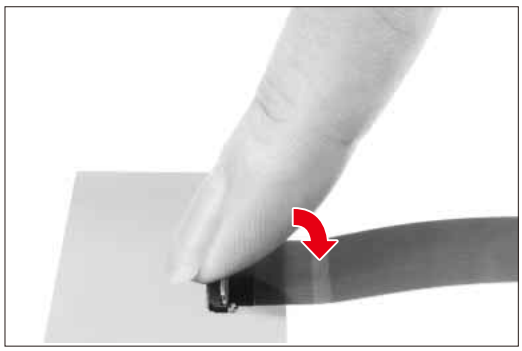

2.FPC removal

❶ Lift up the actuator. Carefully withdraw the FPC.

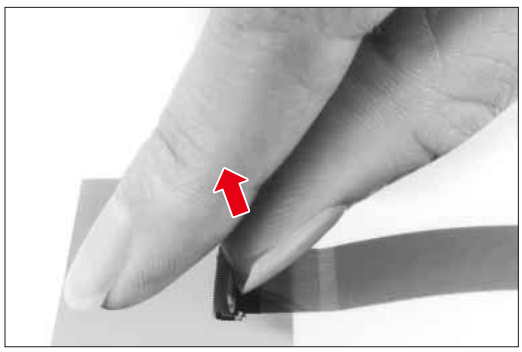

Oct.1.2017 Copyright 2017 HIROSE ELECTRIC CO., LTD. All Rights Reserved.

Precautions

This connector needs to be handled with care due to its thin design and miniature stature.

[Precautions when mounting to PCB]

◆Acceptable amount of PCB distortion
The PCB distortion should be kept to a minimum. The maximum coplanarity of this connector is 0.1 mm, but excessive distortion can create solder failure.

◆FPC specifications
Stiffeners can be used to improve the rigidity of the FPC. We recommend using a glass epoxy with the thickness of 0.3mm or more.

◆Load to the connector
Do not apply any excessive force or mate/unmate these connectors until they are mounted, failure to follow this precaution can lead to deformation or damage to these connectors. Inserting the FPC prior to mounting is not recommended either.

[Precautions in handling PCB after mounting]

◆Applied force to the PCB
Do not place any excessive force on the PCB after the connector has been mounted, this type of action may damage the connectors. (e.g., When separating the PCB into multiple boards or installing fastening screws onto the PCB)

◆PCB bending
For PCB with a width of 100mm, it should not be bent more than a maximum of 0.5 mm. (Please refer to the diagrams below.) PCB bending places an extra load onto the connector and will lead to damage or malfunction.

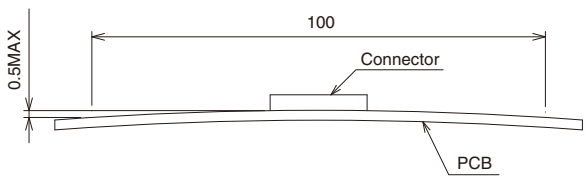

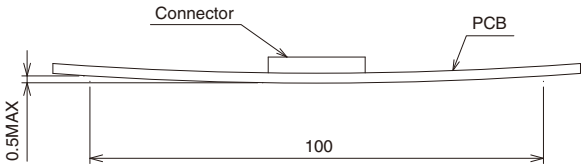

Precautions When Inserting or Coupling FPC

Pay attention to the following points when inserting FPC.

◆Actuator operation

❶Do not apply excessive force when opening the actuator prior to FPC insertion. When opening make sure that the force is applied only to the actuator itself, avoiding touching of the contacts.

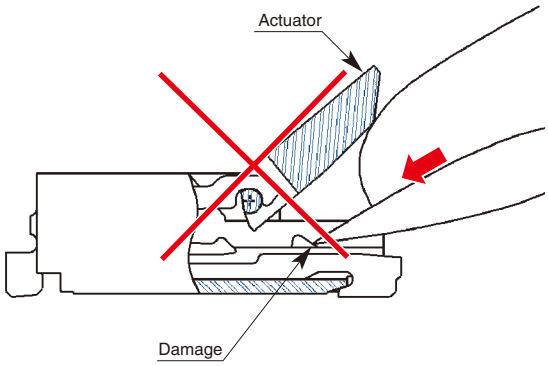

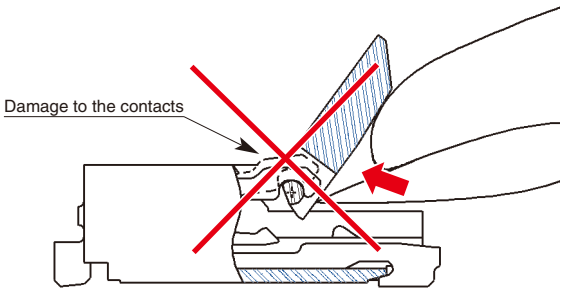

❷Axis of rotation

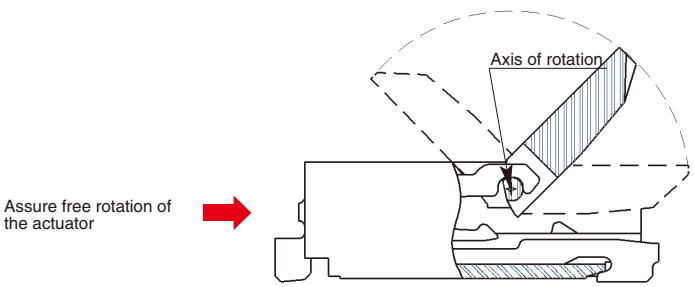

Oct.1.2017 Copyright 2017 HIROSE ELECTRIC CO., LTD. All Rights Reserved.

Precautions

❸The actuator will rotate 135 degrees maximum. Do not apply force to rotate further. (1N max.)

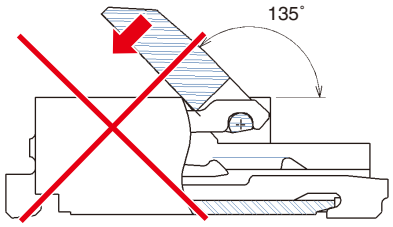

❹When operating the actuator, do so at the center portion.

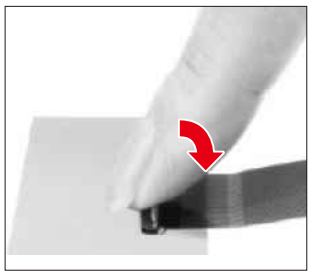

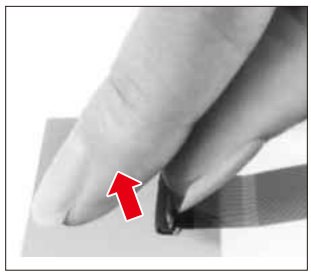

❺As illustrated, do not attempt removal or re-positioning of the actuator.

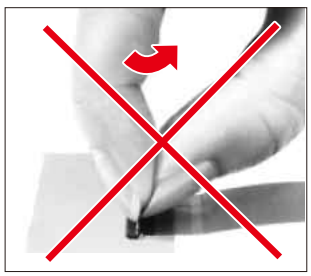

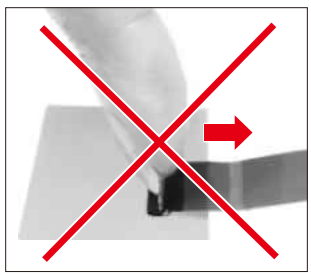

◆FPC Insertion①

The FPC should be aligned parallel with the board surface and perpendicular with the connector (as shown), then completely inserted.

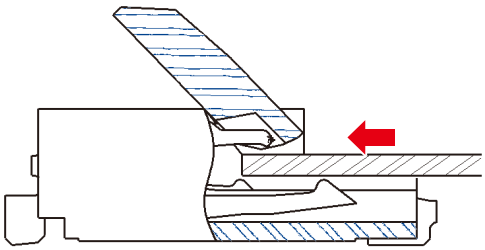

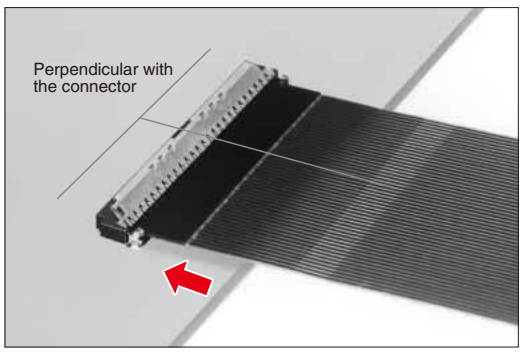

To assure correct electrical and mechanical connection do not insert FPC at angle. It must be fully inserted.

Make sure that the FPC is NOT MOVED during the closing of the actuator.

Oct.1.2017 Copyright 2017 HIROSE ELECTRIC CO., LTD. All Rights Reserved.

Precautions

◆FPC Insertion②
Do not insert the FPC at any angle from above.

As illustrated, angle insertion may cause electrical discontinuity when the FPC is deflected in use.

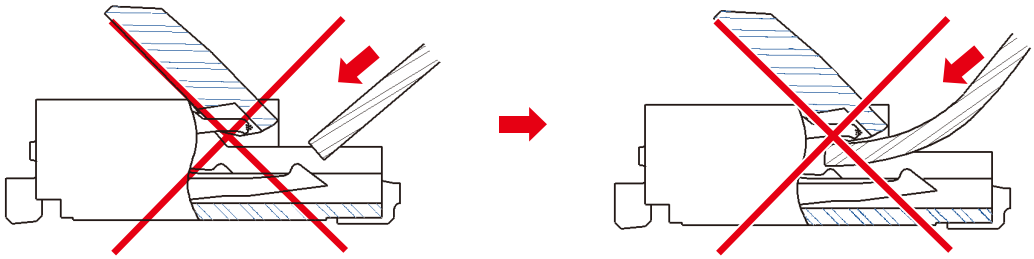

✻To avert insertion of the FPC on an angle, consideration should be given to securing FPC insertion space at the time of board layout. Insertion will be difficult when the FPC is too short.
✻Contact the FPC manufacturer for information about the bending specifications.

◆Verification of the fully closed actuator.
The actuator should be fully closed (as illustrated) and the FPC held firmly in the connector.
Do not press against the actuator when is fully closed. Max force applied to the fully closed actuator should not exceed 1 N.

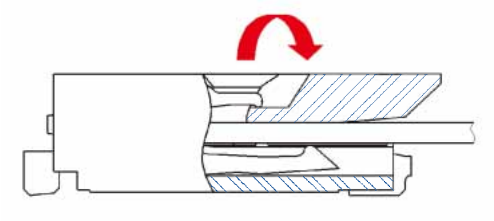

Routing the FPC (FPC fully inserted/ actuator closed)

◆FPC Load
Do not apply force in excess of 0.05N/pin max. in the upward direction (as illustrated). Do not bend the FPC too close to the actuator.

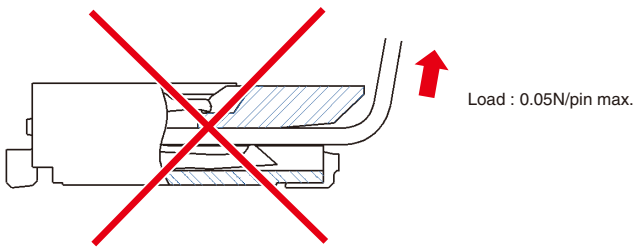

Oct.1.2017 Copyright 2017 HIROSE ELECTRIC CO., LTD. All Rights Reserved.

Precautions

Removing the FPC

Rotate the actuator to the open position (maximum open angle of 135). Carefully withdraw the FPC.

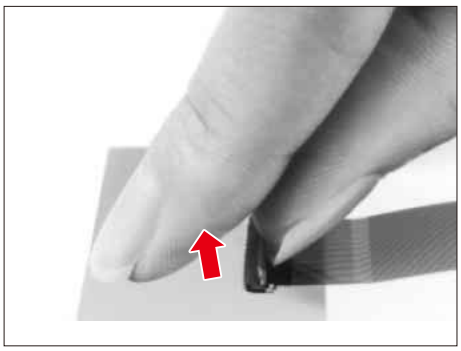

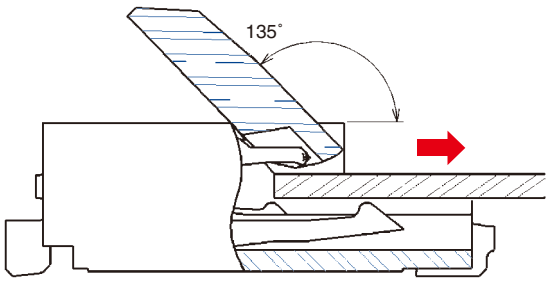

Other Precautions

◆Hand Soldering Precautions

When hand soldering:

❶Do not perform reflow or hand soldering with the FPC inserted in the connector.

❷Do not apply excessive heat or touch the soldering iron anywhere other than the connector leads.

❸Do not use excessive amount of solder or flux compounds.
Operation of the actuator and contacts may be affected by excessive amounts of solder or flux compounds.

Oct.1.2017 Copyright 2017 HIROSE ELECTRIC CO., LTD. All Rights Reserved.

Creative Links to World Electronics ®
HRS

HIROSE ELECTRIC CO.,LTD.
2-6-3,Nakagawa Chuoh,Tsuzuki-Ku,Yokohama-Shi 224-8540,JAPAN
TEL: +81-45-620-3526 Fax: +81-45-591-3726
http://www.hirose.com
http://www.hirose-connectors.com

HRS The characteristics and the specifications contained herein are for reference purpose. Please refer to the latest customer drawings prior to use.
The contents of this catalog are current as of date of 05/2017. Contents are subject to change without notice for the purpose of improvements.