PRODUCT NO.	RoHS compliant
DSIC06LHGET	

REV.	ECN NO.	DR	DATE

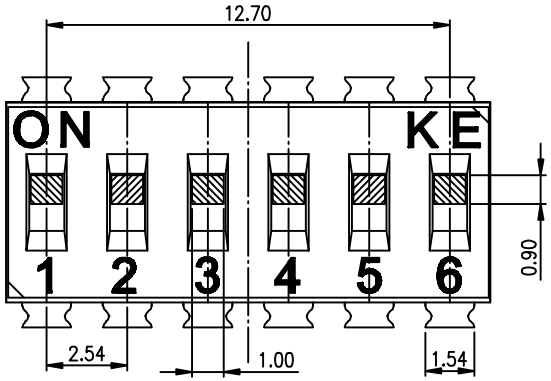

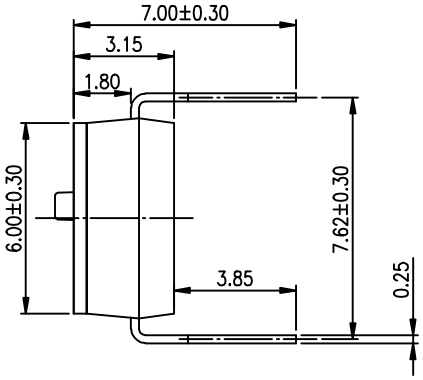

NOTES :

1.Specification:

1>.Operating force: 1000gf Max

2>.Operating Temperature: −40° to+85°

3>.Storage Temperature:: −40° to+85°

4>.Mechanical Life: 3000cycles minimum

5>.Electrical Life: 2000cycles 25mA 24VDC

2. PLATING:

GOLD FLASH 1u"(min.) SOLDERTAIL,
3u" GOLD PLATING ON THE CONTACT AREA,
WITH 50u" NICKEL UNDERPLATINGOVERALL.

3. PART NUMBER DESCRIPTION

DSIC XX T S G E T

- [包装方式：T=管装 R=Reel]
- [电镀层：E=接触部3u" G=接触部3u" /焊接部1~2u"]
- [G=镀全金 S=内金外镍]
- [脚型：S脚 / J脚 / H脚 / A脚 / Z脚]
- [T=低推贴胶 S=低推不贴胶 L=长推]
- [产品P数：01=1P 02=2P 03=3P ..... 12=12P]

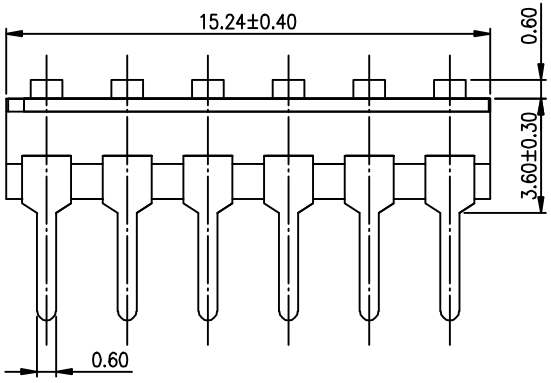

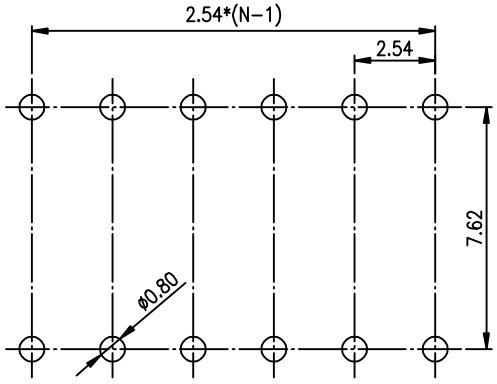

RECOMMENDED P.C.B. LAYOUT (TOP VIEW)

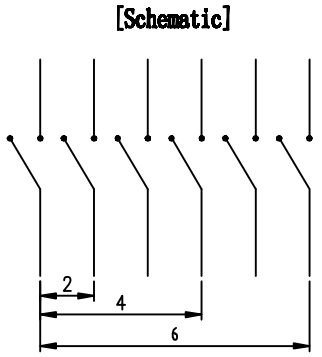

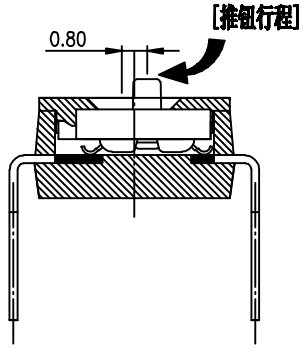

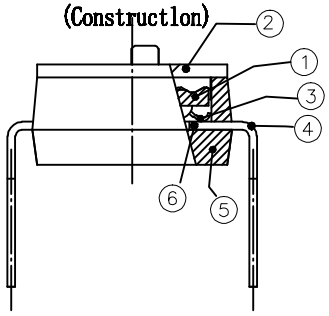

Number	Part Name	Material	Finished
①	Actuator	UL94 V0	White
②	Cover	UL94 V0	Black
③	Movable	Copper Alloy	3u"Gold
④	Terminal	Brass	1u"Gold
⑤	Base	UL94 V0	Black
⑥	Terminal Contact	Brass	3u"Gold

TOLERANCE UNLESS OTHERWISE SPECIFIED		INSPECTION
LINER	ANGLES	COPY
.0 ± 0.25	0. ± 2°	PROJECTION
.00 ± 0.15	.0 ± 1°	
.000± 0.10	.00± 0.5°	
DESIGN	kathy	2012/04/12
DRAWING		
CHECK		
APPRO.		

东莞市广福实业有限公司
DongGuan Kingtek Industrial Co., Ltd.

TITLE	BY DSIC SERIES PITCH 2.54mm			
PRODUCT FAMILY DSIC SERIES				
PRAT NO. DSIC06LHGET				
FILE NO. DSIC06LHGET-A				
SIZE	UNIT	SCALE	SHEET	REV.
A4	mm	2 : 1	1OF1	A