MP2631

28V, 1A, Li-Ion, Linear Battery Charger with 10mA High Voltage LDO

The Future of Analog IC Technology

DESCRIPTION

The MP2631 is a linear, high performance single cell Li-Ion or Li-Polymer battery charger with 10mA LDO. By integrating high voltage input protection into the charger IC, the MP2631 can tolerate an input surge up to 28V.

The internal 5V LDO can be used as a system watchdog supply to monitor charge status. The LDO is ON when the input voltage is greater than 3V and less than 7V, and remains ON when the MP2631 is in SHDN mode. When input is higher than 7.0V, the LDO output will be cut off from the input. When input is lower than 5V, the LDO will work in the dropout region.

The device features constant current (CC) and constant voltage (CV) charging modes with programmable charge current (200mA to 1A), auto-recharge and trickle charge. MP2631 provides ACOK and charge status indications to the system. The OVP circuitry will automatically disconnect both charger and LDO from input when V_{IN} exceeds 7V.

For guaranteed safe operation, the MP2631 limits the die temperature to a preset value when the device is heated up due to limited PCB space. MP2631 is available in 10-pin 3mm x 3mm QFN package.

FEATURES

- Complete Solution for Charging Single-Cell Li-Ion Battery
- Input Surge Protection Up to 28V
- 5V LDO output
- 3V to 7V Input Operating Range
- Programmable Charge Current: 200mA to 1A
- Termination and auto-recharge
- 0.75% V_{BATT} Accuracy over Temperature
- <1μA Battery Reverse Current
- Automatic die temperature limiting
- Fault and Charge Status Indicators
- External Soft-Start to Control Inrush Current
- 3mm x 3mm QFN Package

APPLICATIONS

- Cell Phones
- Digital Cameras
- Smart Phones
- PDAs
- MP3 Players

"MPS" and "The Future of Analog IC Technology" are Registered Trademarks of Monolithic Power Systems, Inc.

TYPICAL APPLICATION CIRCUIT

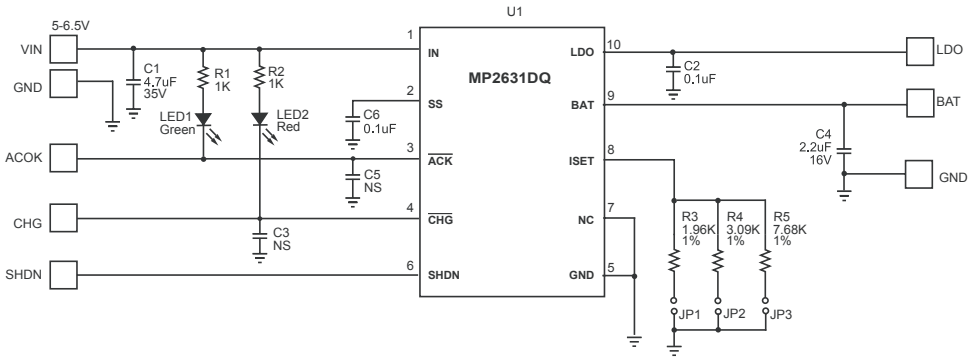

MPS Proprietary Information. Unauthorized Photocopy and Duplication Prohibited.
© 2008 MPS. All Rights Reserved.

PACKAGE REFERENCE

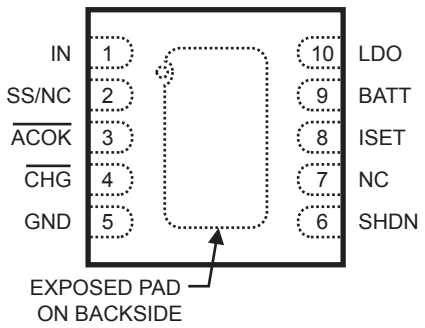

Part Number*	Package	Temperature
MP2631DQ	QFN10 (3mm x 3mm)	–40°C to +85°C

* For Tape & Reel, add suffix –Z (eg. MP2631DQ–Z)
For RoHS compliant packaging, add suffix –LF
(eg. MP2631DQ–LF–Z)

ABSOLUTE MAXIMUM RATINGS (1)

IN to GND ..... –0.3V to 28V
All Other Pins to GND..... –0.3V to +6.5V
Junction Temperature..... 140°C
Lead Temperature ..... 260°C
Storage Temperature ..... –65°C to +150°C

Recommended Operating Conditions (2)

Nominal Supply Voltage V_{IN}..... 3.5V to 5.5V
Operating Temperature ..... –40°C to +85°C

Thermal Resistance (3)

	θ_{JA}	θ_{JC}	
3x3 QFN10	50	12	°C/W

Notes:
1) Exceeding these ratings may damage the device.
2) The device is not guaranteed to function outside of its operating conditions.
3) Measured on approximately 1" square of 1 oz copper.

ELECTRICAL CHARACTERISTICS

V_{IN} = 5.2V, V_{EN} = 0V, T_A = +25°C, unless otherwise noted.

Parameter	Symbol	Condition	Min	Typ	Max	Units
Input Quiescent Current	I_{SUPPLY}	SHDN= Low, V_{BATT}=4.25V, ILDO = 0A, $V_{IN} \geq$ 5.2V		950		µA
Battery Voltage Regulation	V_{BATT}	T = –5°C to +75°C, I_{BATT} = 0	4.16	4.20	4.24	V
LDO OUT	V_{OUT}	Iout = 0 - 10mA, Vin = 5.0 – 6.5 V	4.85	5.0	5.15	V
Min LDO Output Voltage	V_{OUT_MIN}	I=2mA, Vin=5.0V	4.85			V
LDO Load Regulation		Load < 10mA		0.005		V/mA
LDO Short Current Limit				80		mA
OVP Threshold		Input rising	6.7	7.0	7.3	V
Constant Current Regulation	I_{CHG}	V_{BATT} = 3.8V R_{CHG} = 3.3k	475	530	585	mA
Constant Current Variation		V_{BATT} = 3.8V, T_J = 0°C to +120°C,	87	100	113	$\%I_{CHG}$ (4)
Trickle Current		V_{BATT} = 2.3V	5	10	15	$\%I_{CHG}$ (4)
Trickle Threshold Voltage		V_{BATT} rising	2.45	2.6	2.75	V
Trickle Voltage Hysteresis				100		mV
IBF Threshold	I_{BF}	In CV mode	5	10	15	$\%I_{CHG}$
OVP Threshold	OVP	Vin rising	6.7	7	7.3	V
OVP Hysteresis				400		mV
UVLO		Vin rising	1.6	2.1	2.5	V

MPS Proprietary Information. Unauthorized Photocopy and Duplication Prohibited.
© 2008 MPS. All Rights Reserved.

ELECTRICAL CHARACTERISTICS *(continued)*

V_{IN} = 5.2V, V_{EN} = 0V, T_A = +25°C, unless otherwise noted.

Parameter	Symbol	Condition	Min	Typ	Max	Units
UVLO Hysteresis				150		mV
SHDN Trip Threshold High			1.5			V
SHDN Trip Threshold Low					0.4	V
$\overline{CHG}$, $\overline{ACOK}$ Sink Current		Pin Voltage = 0.2V	4			mA
Battery Reverse Current to BATT Pin		SHDN = Low and Input = Floating or 0V			1	µA
Soft Thermal Shutdown Threshold	Tlim		105	120	135	°C
Soft Thermal Shutdown Hysteresis				10		°C
Soft-Start Time		From trickle to 90% of full current, (Css absent)		300		us
Recharge Voltage Threshold	$V_{RECHARGE}$	V_{BATT} falling from 4.2V	3.9	4.0	4.1	V
Recharge Voltage Hysteresis				100		mV

Notes:

4) I_{CHG} is the target preprogrammed charge current (Die temperature below 110°C).
5) I_{BF} is the target preprogrammed battery full current threshold.

PIN FUNCTIONS

Pin #	Name	Description
1	IN	Input Supply Pin. IN receives the AC adapter or USB supply voltage.
2	SS/NC	Soft Start Pin. If it is left open, internal fixed SS is operated and the charger will not charge a battery when its initial voltage is higher than the recharge threshold (4.0V).
3	$\overline{ACOK}$	Open-Drain Input Fault Indicator. This pin is low when 2.1V < Vin < 7.0V
4	$\overline{CHG}$	Open-Drain Charge Indicator. This pin is low during charging, is High after battery full or termination.
5	GND Exposed Pad	Ground. Exposed pad and GND pin must be connected to same ground plane
6	SHDN	Used for Charger Termination. An input “Low” signal at this pin or if the pin floating will enable the charger.
7	NC	No Connection
8	ISET	Constant Charge Current Program pin. Connect this pin to an external resistor to program the charging current in CC Mode.
9	BATT	Charger Output
10	LDO	LDO output

MPS Proprietary Information. Unauthorized Photocopy and Duplication Prohibited.
© 2008 MPS. All Rights Reserved.

TYPICAL PERFORMANCE CHARACTERISTICS

C1=4.7uF, C2=0.1uF, C4=2.2uF, V_{IN}=5V, T_A=25ºC, unless otherwise noted.

Battery Charge Curve

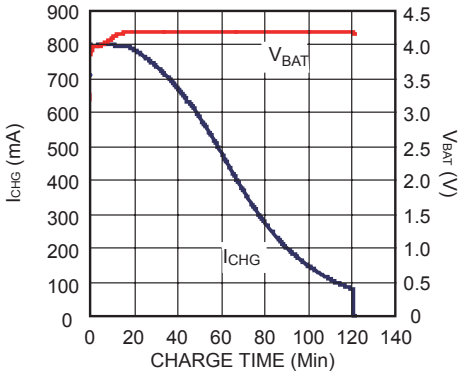

Charge Current vs Battery Voltage

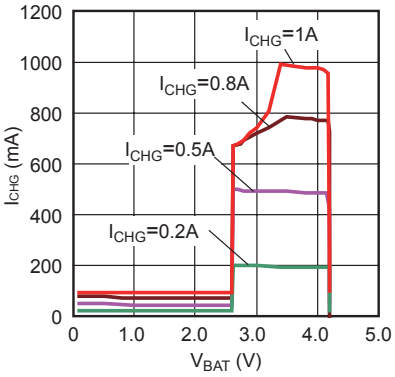

Charge Current vs Battery Voltage

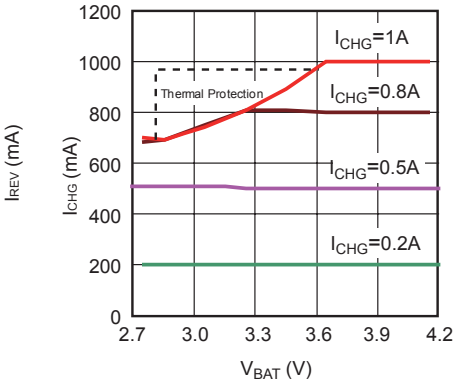

Charge Current vs Input Voltage

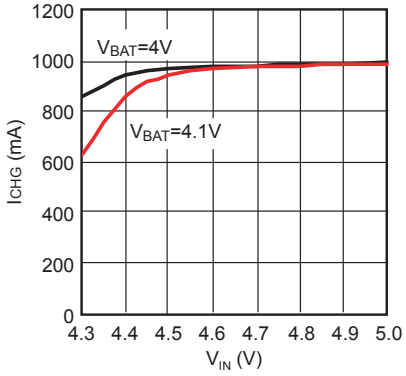

1/RSET vs. ISET

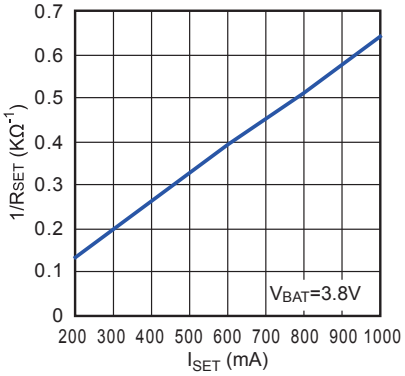

Trickle Charge Curve

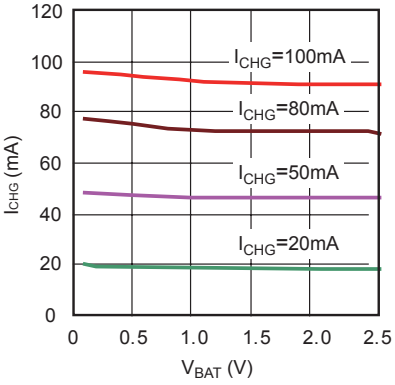

LDO Voltage Dropout

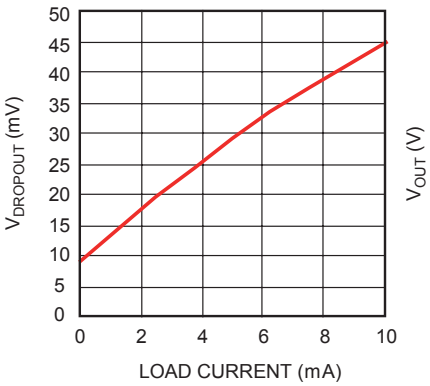

LDO Load Regulation

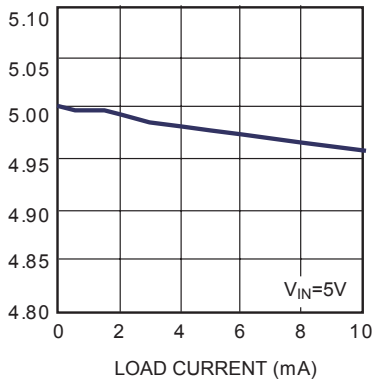

MPS Proprietary Information. Unauthorized Photocopy and Duplication Prohibited.
© 2008 MPS. All Rights Reserved.

TYPICAL PERFORMANCE CHARACTERISTICS *(continued)*

C1=4.7uF, C2=0.1uF, C4=2.2uF, V_{IN}=5V, T_A=25ºC, unless otherwise noted.

LDO Line Regulation

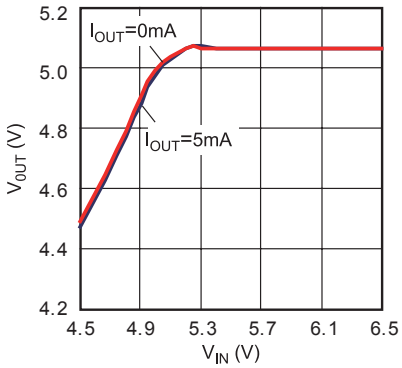

Charger Thermal Protection

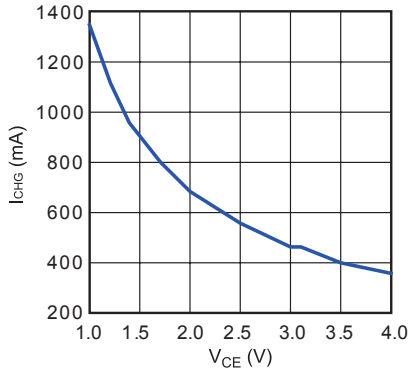

Current Charge vs. Temperature

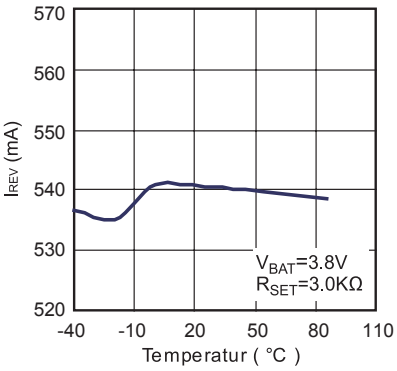

V_{BAT} vs. Temperature

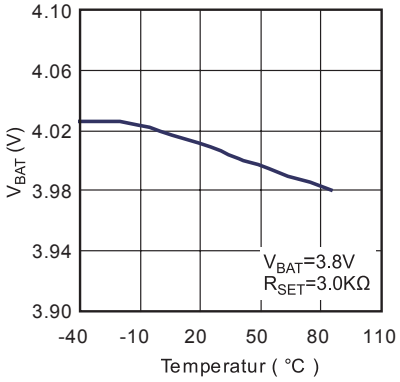

Short Charger Circuit Protection

V_{IN}=5V, Battery doesn't Present

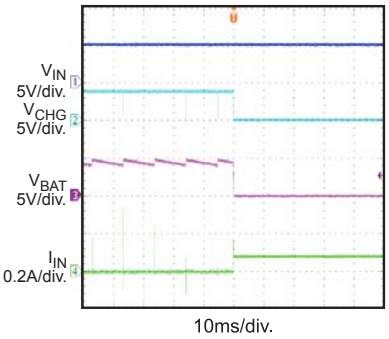

Short Charger Circuit Recovery

V_{IN}=5V, Battery doesn't Present

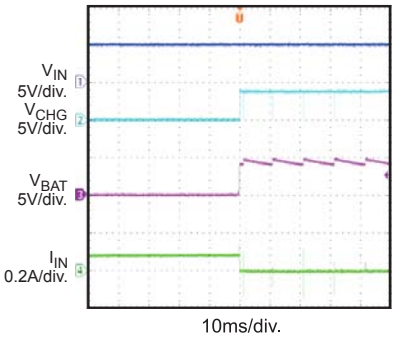

Over Input Voltage Protection (LDO)

V_{IN}=7.1V, V_O=5V, I_O=5mA

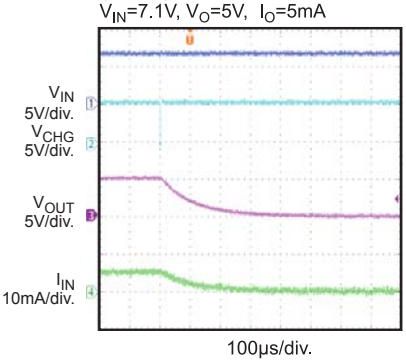

MPS Proprietary Information. Unauthorized Photocopy and Duplication Prohibited.
© 2008 MPS. All Rights Reserved.

TYPICAL PERFORMANCE CHARACTERISTICS *(continued)*

C1=4.7uF, C2=0.1uF, C4=2.2uF, V_{IN}=5V, T_A=25ºC, unless otherwise noted.

Recovery Input Voltage (LDO)

V_{IN}=6.6V, V_O=5V, I_O=5mA

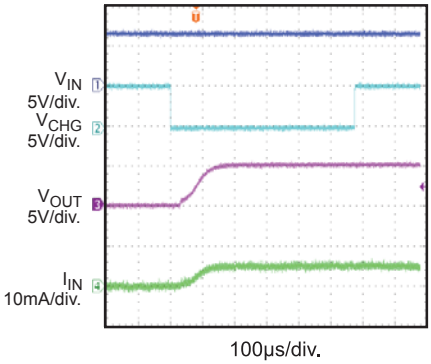

Shut Down Low vs. Battery Charge

I_{SET} Resistor=2.0KΩ

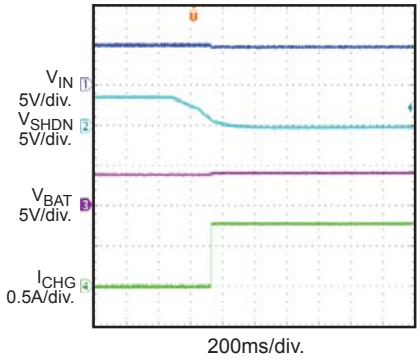

Shut Down High vs. Battery Charge

I_{SET} Resistor=2.0KΩ

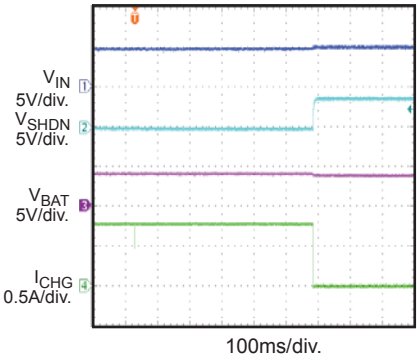

Power Ramp Up vs. Battery Charge

V_{BAT}=4.1V, C_{SS}=0.1uF

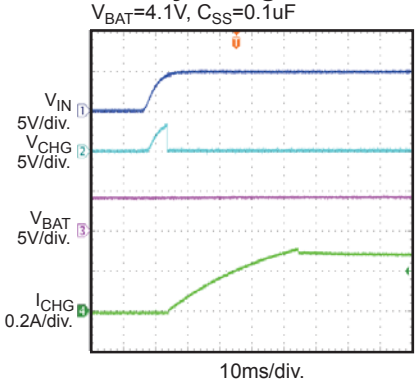

Power Ramp Down vs. Battery Charge

V_{BAT}=4.1V, C_{SS}=0.1uF

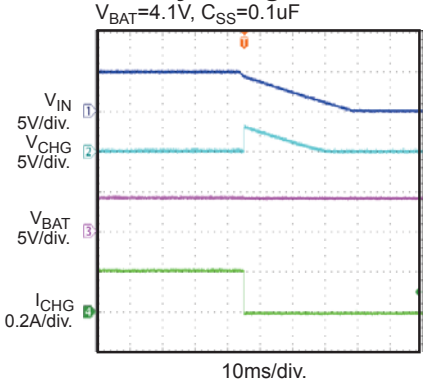

Charge Full Terminated

I_{SET} Resistor=3.0KΩ, C_{SS}=0.1uF
V_{BAT}=4.2V

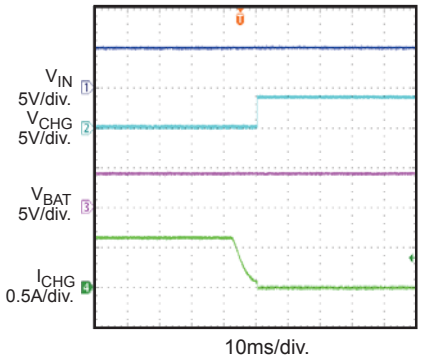

Terminated to Re-Charge

I_{SET} Resistor=3.0KΩ, C_{SS}=0.1uF
V_{BAT}=4.1V

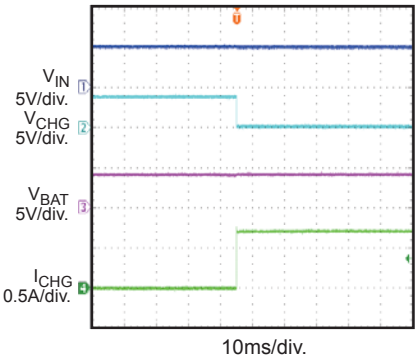

MPS Proprietary Information. Unauthorized Photocopy and Duplication Prohibited.
© 2008 MPS. All Rights Reserved.

BLOCK DIAGRAM

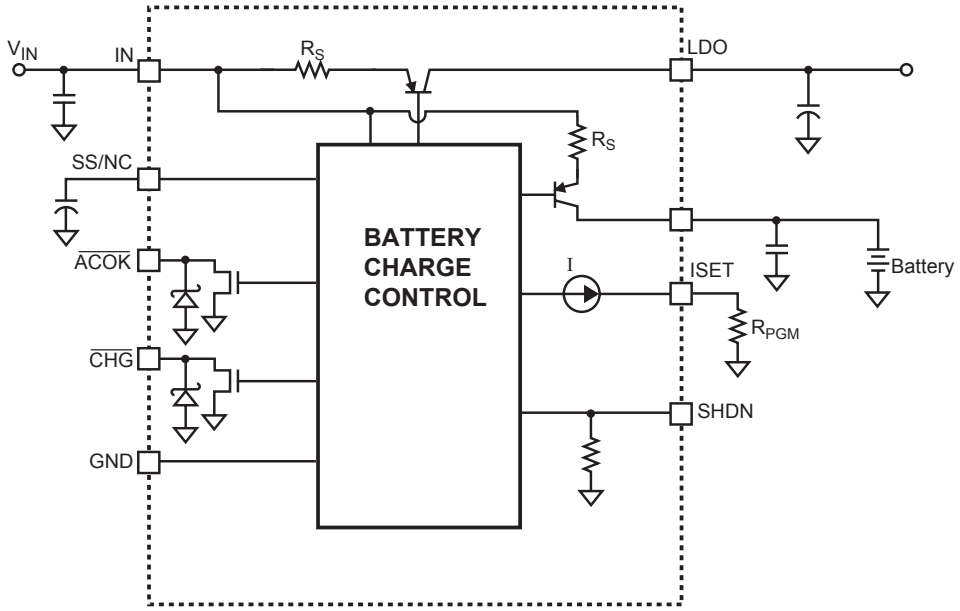

Figure 1—Functional Block Diagram

OPERATION

Input Voltage Range

The MP2631 has built-in input voltage surge protection as high as +28V. The charger IC will be automatically disabled when the input voltage is lower than 2.1V or higher than 7.0V. For MP2631, the open-drain pin $\overline{ACOK}$ is used to indicate an input power good condition (i.e. 3.5V<V_{IN}<6.5V). If the input voltage is lower than the battery voltage, the charge function is also disabled to prevent the battery from draining.

Charge Cycle (Mode Change: Trickle->CC-> CV)

Figure 2 below shows the typical charging profile for the MP2631. It begins charging at the constant current of the programmed value (I_{CHG}). This is referred to as Constant Current (CC) mode. For a deeply discharged battery, it will start trickle at 10% of the programmed charge current until battery voltage reaches 2.6V. Once the battery voltage reaches 4.2V, the charger will operate in the constant voltage (CV) charge mode. The charge current drops during CV mode, and the battery full indication is set when the charge current reduces to the battery full value (I_{BF}) at 10% of the nominal charge current.

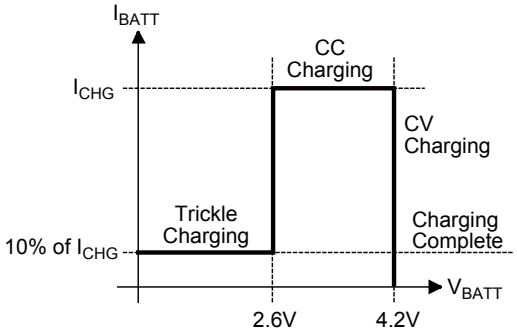

Figure 2—MP2631 Typical Charging Profile

MPS Proprietary Information. Unauthorized Photocopy and Duplication Prohibited.
© 2008 MPS. All Rights Reserved.

Programming of Charge Current and Battery Full Current

The charge current (I_{CHG}) is set by a resistor (R_{PGM}) connecting from the ISET pin to GND. The relationship of the charge current and the programming resistance is established by the following table and graph.

Table 1—R_{PGM} and I_{CHG} Relationship

R_{PGM} (kΩ)	I_{CHG} (mA)
1.55	1000
1.72	900
1.94	800
2.21	700
2.58	600
3.1	500
3.87	400
5.16	300
7.75	200
15.5	100

The open-drain pin $\overline{CHG}$ is used to indicate charging status. When the battery full condition is reached or any other condition prevents the charger from charging, $\overline{CHG}$ will become floating and the charge function is terminated. The charger will begin recharging when the battery voltage is reduced to 4.0V due to any kind of leakage.

LDO Operation

The on-chip current limited LDO will regulate its output at 5V for the input voltage from 5.1V to 6.5V. When V_{IN} is below 5.1V, it will work in the dropout mode. LDO is always ON no matter what state of SHDN is, unless OVP is reached. It can handle a maximum load of 10mA. A 0.1uF -1uF cap at the output is recommended.

MPS Proprietary Information. Unauthorized Photocopy and Duplication Prohibited.
© 2008 MPS. All Rights Reserved.

PACKAGE INFORMATION

QFN10 (3mm x 3mm)

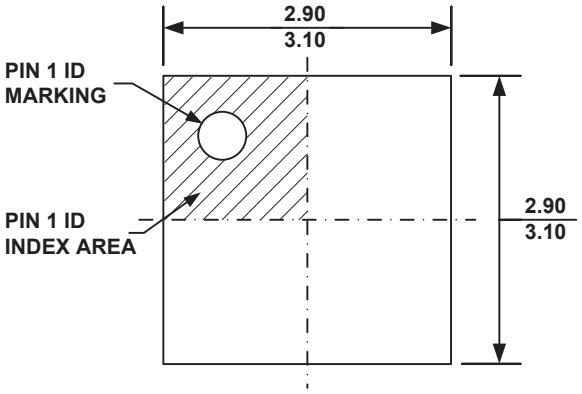

TOP VIEW

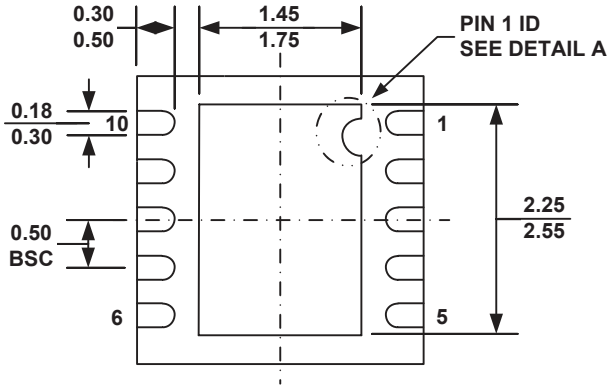

BOTTOM VIEW

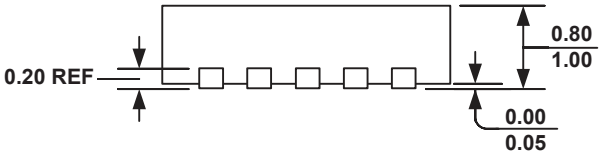

SIDE VIEW

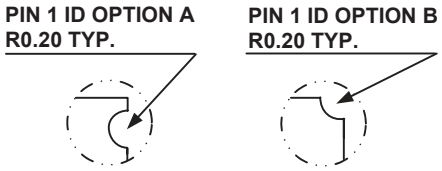

DETAIL A

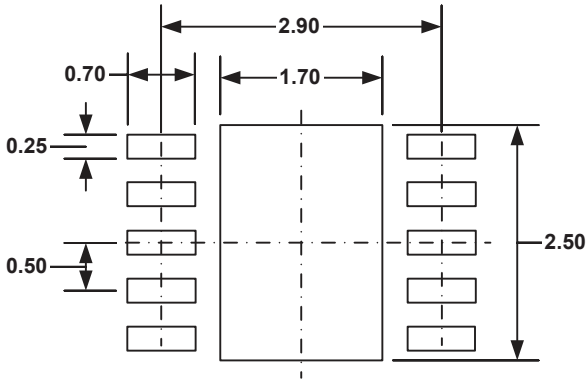

RECOMMENDED LAND PATTERN

NOTE:

1) ALL DIMENSIONS ARE IN MILLIMETERS.
2) EXPOSED PADDLE SIZE DOES NOT INCLUDE MOLD FLASH.
3) LEAD COPLANARITY SHALL BE 0.10 MILLIMETER MAX.
4) DRAWING CONFORMS TO JEDEC MO-229, VARIATION VEED-5.
5) DRAWING IS NOT TO SCALE.

NOTICE: The information in this document is subject to change without notice. Users should warrant and guarantee that third party Intellectual Property rights are not infringed upon when integrating MPS products into any application. MPS will not assume any legal responsibility for any said applications.

MPS Proprietary Information. Unauthorized Photocopy and Duplication Prohibited.
© 2008 MPS. All Rights Reserved.