注記：
NOTES :

1. 材質及び仕上げ(めっき仕様)：TABLE 1参照
   MATERIAL AND FINISHES (PLATING SPECIFICATION) : SEE TABLE 1
2. 製品仕様書、コネクタ取扱説明書、適合嵌合相手はSHEET 3をご参照ください。
   PLEASE REFER TO SHEET 3 FOR PRODUCT SPECIFICATION, APPLICATION SPECIFICATION AND MATE WITH.
3. 偶数極に適用
   APPLY TO EVEN CIRCUIT
4. 発注番号：SHEET 3 参照
   ORDER NUMBER : PLEASE REFER TO SHEET 3

220097**7*

極数
CIRCUIT SIZE

NO.	ハウジングカラー HOUSING COLOR
0	ナチュラル(白) NATURAL (WHITE)
1	黒 BLACK

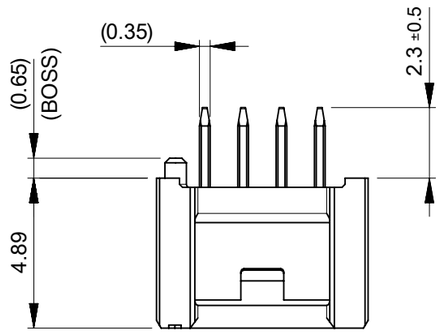

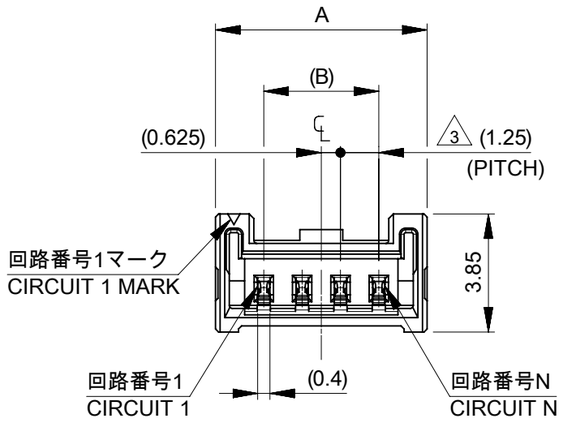

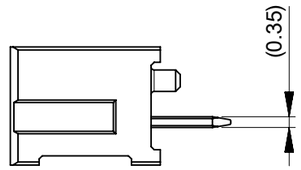

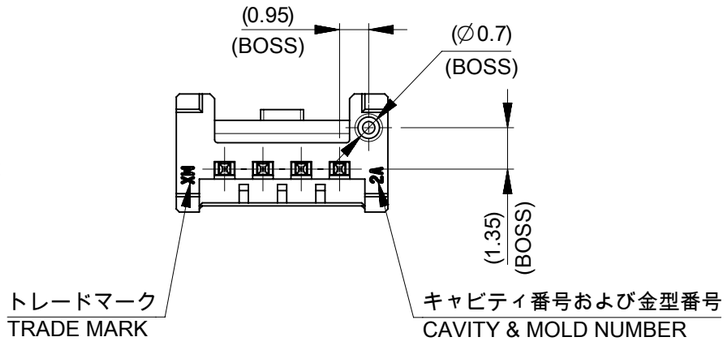

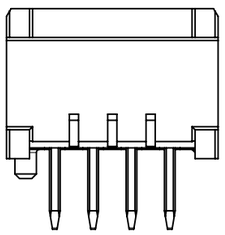

-	22	18.75	21.9	16
-	20.75	17.5	20.65	15
-	19.5	16.25	19.4	14
-	18.25	15	18.15	13
-	17	13.75	16.9	12
-	15.75	12.5	15.65	11
-	14.5	11.25	14.4	10
14.45	13.25	10	13.15	9
13.2	12	8.75	11.9	8
11.95	10.75	7.5	10.65	7
10.7	9.5	6.25	9.4	6
9.45	8.25	5	8.15	5
8.2	7	3.75	6.9	4
6.95	5.75	2.5	5.65	3
5.7	4.5	1.25	4.4	2
D	C	B	A	極数 CIRCUIT SIZE

1 TABLE 1

番号 NO.	部品 PART	材質 MATERIAL
①	ハウジング HOUSING	ポリアミド(PA), ガラス充填, UL94V-0, 色：SHEET 3参照 POLYAMIDE (PA), GLASS FILLED, UL94V-0, COLOR : SEE SHEET 3
②	ターミナル TERMINAL	黄銅 BRASS
		錫ビスマスめっき：1.0 MICROMETER MINIMUM TIN-BISMUTH PLATING
		ニッケルめっき (下地めっき) : 1.0 MICROMETER MINIMUM NICKEL PLATING (UNDERPLATING)

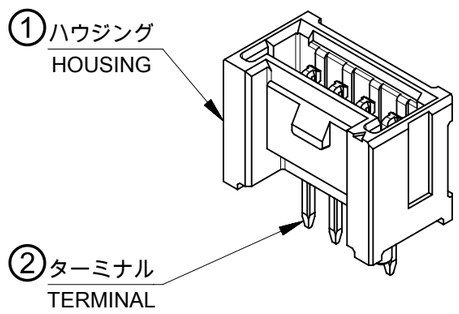

DOCUMENT STATUS	P1	RELEASE DATE	2023/09/12 06:08:42

THIS DRAWING CONTAINS INFORMATION THAT IS PROPRIETARY TO MOLEX ELECTRONIC TECHNOLOGIES, LLC AND SHOULD NOT BE USED WITHOUT WRITTEN PERMISSION

DIMENSION UNITS	SCALE
mm	NTS

GENERAL TOLERANCES (UNLESS SPECIFIED)

ANGULAR TOL	±	3.0 °
4 PLACES	±	0.2
3 PLACES	±	0.2
2 PLACES	±	0.2
1 PLACE	±	0.2
0 PLACES	±	0.2

DRAFT WHERE APPLICABLE MUST REMAIN WITHIN DIMENSIONS

CURRENT REV DESC:

EC NO: 757367
DRWN: SOKUMURA01 2022/06/21
CHK'D: SAKIYAMA 2023/09/12
APPR: AIDA 2023/09/12

INITIAL REVISION:
DRWN: SOKUMURA01 2022/06/21
APPR: AIDA 2023/09/12

THIRD ANGLE PROJECTION | DRAWING: A3-SIZE | SERIES: 220097

molex

MICRO-LOCK PLUS 1.25 W/B SIGNLE ROW
VERTICAL THROUGH HOLE PLUG ASSEMBLY
WITH BOSS LOW HALOGEN TIN-BISMUTH PLATING

PRODUCT CUSTOMER DRAWING

DOCUMENT NUMBER	DOC TYPE	DOC PART	REVISION
2200970000-SD	PSD	000	A

MATERIAL NUMBER	CUSTOMER	SHEET NUMBER
SEE SHEET 3	GENERAL	1 OF 3

FORMAT: master-lb-prod-A3
REVISION: J1
DATE: 2021/05/01

製品形状
PRODUCT SHAPE

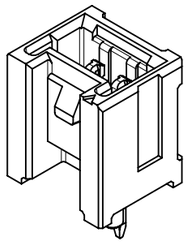

2-11極
2-11 CIRCUIT

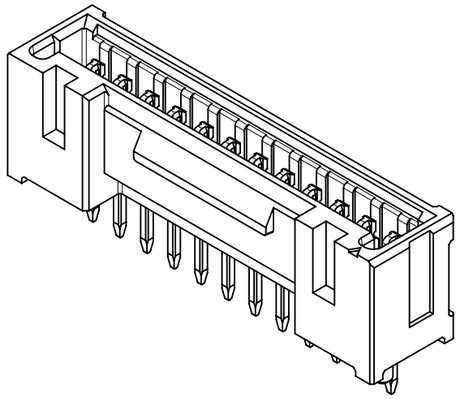

12-13極
12-13 CIRCUIT

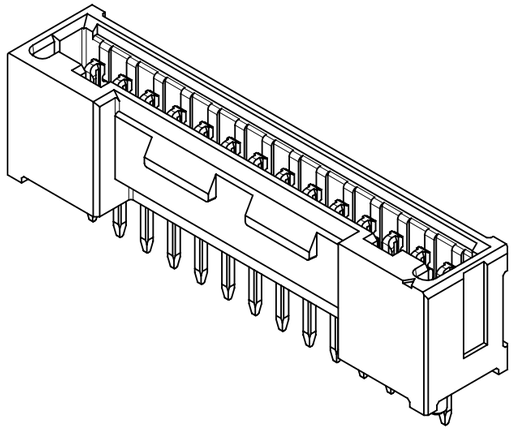

14極
14 CIRCUIT

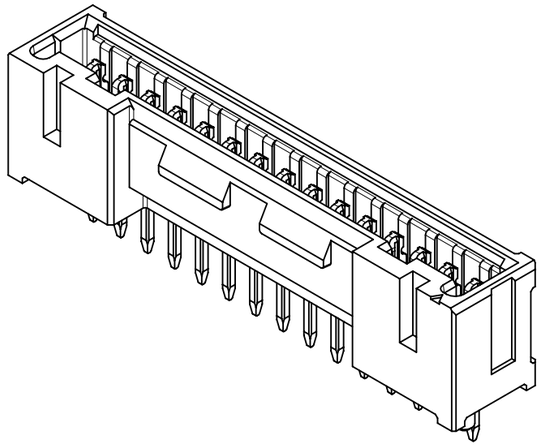

15-16極
15-16 CIRCUIT

嵌合状態図
MATED CONNECTORS

△2 嵌合相手：204532シリーズ
MATE WITH : 204532 SERIES

△2 リテーナー：214528シリーズ
RETAINER : 214528 SERIES

△2 嵌合相手：214526シリーズ
MATE WITH : 214526 SERIES

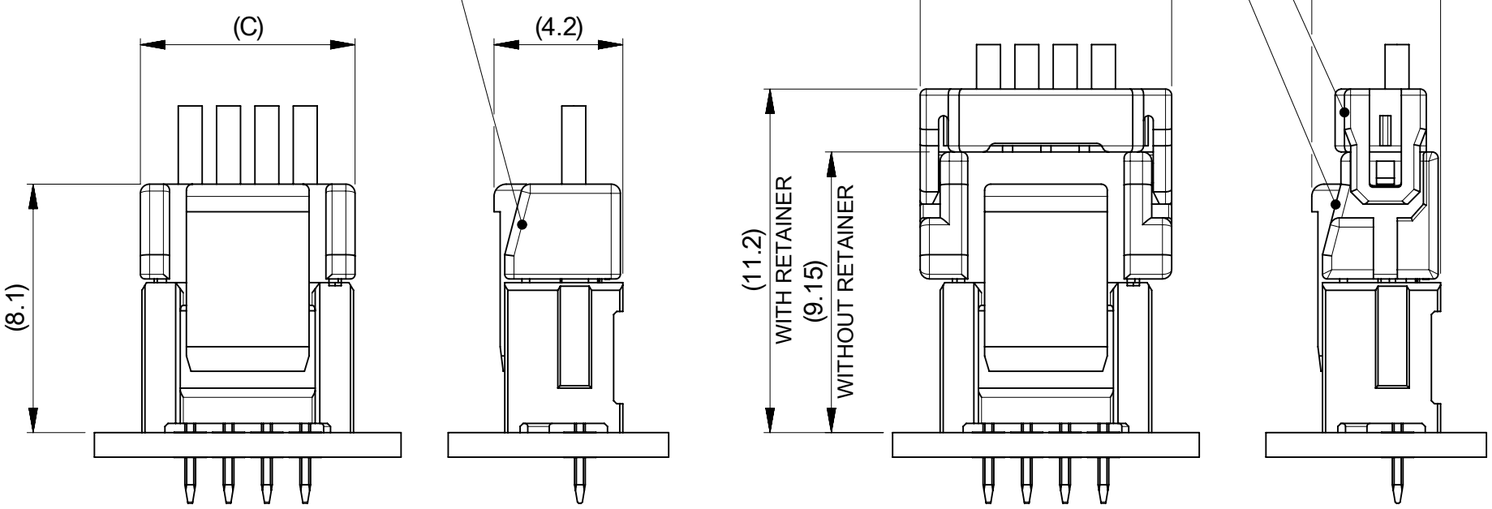

推奨基板レイアウト
RECOMMENDED PCB PATTERN LAYOUT

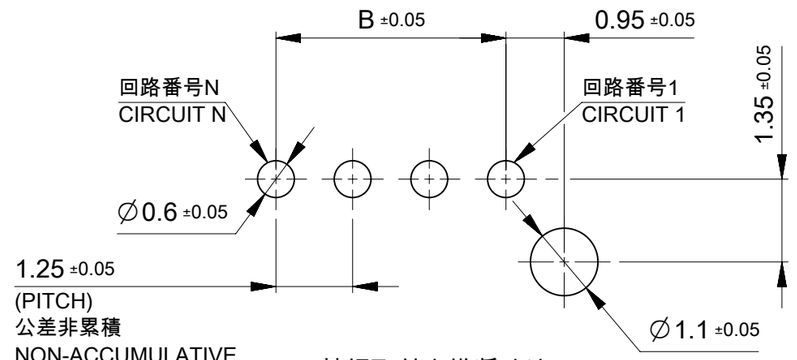

基板取付穴推奨寸法 (t=0.8)
RECOMMENDED PCB HOLE DIMENSION (t=0.8)

THIS DRAWING CONTAINS INFORMATION THAT IS PROPRIETARY TO MOLEX ELECTRONIC TECHNOLOGIES, LLC AND SHOULD NOT BE USED WITHOUT WRITTEN PERMISSION

DIMENSION UNITS	mm
SCALE	NTS
GENERAL TOLERANCES (UNLESS SPECIFIED)	
ANGULAR TOL	± 3.0 °
4 PLACES	± 0.2
3 PLACES	± 0.2
2 PLACES	± 0.2
1 PLACE	± 0.2
0 PLACES	± 0.2
DRAFT WHERE APPLICABLE MUST REMAIN WITHIN DIMENSIONS	

CURRENT REV DESC:

EC NO: 757367
DRWN: SOKUMURA01 2022/06/21
CHK'D: SAKIYAMA 2023/09/12
APPR: AIDA 2023/09/12

INITIAL REVISION:
DRWN: SOKUMURA01 2022/06/21
APPR: AIDA 2023/09/12

molex

MICRO-LOCK PLUS 1.25 W/B SIGNLE ROW
VERTICAL THROUGH HOLE PLUG ASSEMBLY
WITH BOSS LOW HALOGEN TIN-BISMUTH PLATING

PRODUCT CUSTOMER DRAWING

DOCUMENT NUMBER	DOC TYPE	DOC PART	REVISION
2200970000-SD	PSD	000	A

THIRD ANGLE PROJECTION	DRAWING	SERIES	MATERIAL NUMBER	CUSTOMER	SHEET NUMBER
	A3-SIZE	220097	SEE SHEET 3	GENERAL	2 OF 3

DOCUMENT STATUS	P1	RELEASE DATE	2023/09/12 06:08:42

FORMAT: master-tb-prod-A3
REVISION: J1
DATE: 2021/05/01

△2 適合製品及び各種仕様書 APPLICABLE PRODUCTS AND VARIOUS SPECIFICATIONS

梱包仕様書 PACKAGING SPECIFICATION	2200979200-SPK PS 200

適合嵌合相手 MATE WITH	シリーズ番号 SERIES NUMBER	204532	214526
	リテーナー対応 RETAINER COMPLIANT	NOT COMPLIANT	COMPLIANT
製品仕様書 PRODUCT SPECIFICATION		2045320002-PS PS 000	2145260003-PS PS 000
コネクタ取扱説明書 APPLICATION SPECIFICATION		5055650000-AS PS 000	

△4 発注番号一覧
ORDER NUMBER LIST

BLACK	NATURAL (WHITE)	HOUSING COLOR
2200971671	2200971670	16
2200971571	2200971570	15
2200971471	2200971470	14
2200971371	2200971370	13
2200971271	2200971270	12
2200971171	2200971170	11
2200971071	2200971070	10
2200970971	2200970970	9
2200970871	2200970870	8
2200970771	2200970770	7
2200970671	2200970670	6
2200970571	2200970570	5
2200970471	2200970470	4
2200970371	2200970370	3
2200970271	2200970270	2
発注番号 ORDER NUMBER		極数 CIRCUIT SIZE
梱包形態:トレー PACKAGING : TRAY		

THIS DRAWING CONTAINS INFORMATION THAT IS PROPRIETARY TO MOLEX ELECTRONIC TECHNOLOGIES, LLC AND SHOULD NOT BE USED WITHOUT WRITTEN PERMISSION

DIMENSION UNITS	SCALE
mm	NTS

GENERAL TOLERANCES (UNLESS SPECIFIED)

ANGULAR TOL	±	3.0 °
4 PLACES	±	0.2
3 PLACES	±	0.2
2 PLACES	±	0.2
1 PLACE	±	0.2
0 PLACES	±	0.2

DRAFT WHERE APPLICABLE MUST REMAIN WITHIN DIMENSIONS

CURRENT REV DESC:

EC NO: 757367
DRWN: SOKUMURA01 2022/06/21
CHK'D: SAKIYAMA 2023/09/12
APPR: AIDA 2023/09/12

INITIAL REVISION:
DRWN: SOKUMURA01 2022/06/21
APPR: AIDA 2023/09/12

molex

MICRO-LOCK PLUS 1.25 W/B SIGNLE ROW
VERTICAL THROUGH HOLE PLUG ASSEMBLY
WITH BOSS LOW HALOGEN TIN-BISMUTH PLATING

PRODUCT CUSTOMER DRAWING

DOCUMENT NUMBER	DOC TYPE	DOC PART	REVISION
2200970000-SD	PSD	000	A

THIRD ANGLE PROJECTION	DRAWING	SERIES
	A3-SIZE	220097

MATERIAL NUMBER	CUSTOMER	SHEET NUMBER
SEE CHART	GENERAL	3 OF 3

DOCUMENT STATUS	P1	RELEASE DATE	2023/09/12 06:08:42

FORMAT: master-lb-prod-A3
REVISION: J1
DATE: 2021/05/01