Quasi-resonant AC/DC Converter Built-in 1700 V SiC-MOSFET

BM2SCQ12xT-LBZ Series

General Description

This is the product guarantees long time support in industrial market.

BM2SCQ12xT-LBZ series is a quasi-resonant AC/DC converter that provides an optimum system for all products which has an electrical outlet. Quasi-resonant operation enables soft switching and helps to keep the EMI low.

This IC can be designed easily because it includes the 1700 V/4 A SiC (Silicon-Carbide) MOSFET.

Design with a high degree of flexibility is achieved with current detection resistors as external devices. The burst operation reduces an input power at light load.

BM2SCQ12xT-LBZ series includes various protection functions, such as soft start function, burst operation, over current limiter per cycle, over-voltage protection function, overload protection function.

Features

- Long Time Support Product for Industrial Applications
- 6 Pins: TO220-6M Package
- Built-in 1700 V/4 A/1.12 Ω SiC-MOSFET
- Quasi-resonant Type (Low EMI)
- Frequency Reduction Function
- Low Current Consumption (19 μA) during Standby
- Burst Operation at Light Load
- SOURCE Pin Leading Edge Blanking
- VCC UVLO (Under Voltage Lockout protection)
- VCC OVP (Over Voltage Protection)
- Over Current Protection Circuit per Cycle
- Soft Start Function
- ZT Pin Trigger Mask Function
- ZT OVP (Over Voltage Protection)

Key Specifications

- Operating Power Supply Voltage Range:
  - VCC: 15.0 V to 27.5 V
  - DRAIN: 1700 V (Max)
- Normal Operating Current: 2000 μA (Typ)
- Burst Operating Current: 500 μA (Typ)
- Maximum Operating Frequency: 120 kHz (Typ)
- Operating Temperature: -40 °C to +105 °C

Package

Package	W (Typ) x D (Typ) x H (Max)
TO220-6M	10.0 mm x 4.5 mm x 25.6 mm



Applications

Power Supply for Industrial Equipment, AC Adaptor, Household Appliances

Lineup

Product name	FB OLP	VCC OVP
BM2SCQ121T-LBZ	Auto Restart	Latch
BM2SCQ122T-LBZ	Latch	Latch
BM2SCQ123T-LBZ	Auto Restart	Auto Restart
BM2SCQ124T-LBZ	Latch	Auto Restart

Typical Application Circuit

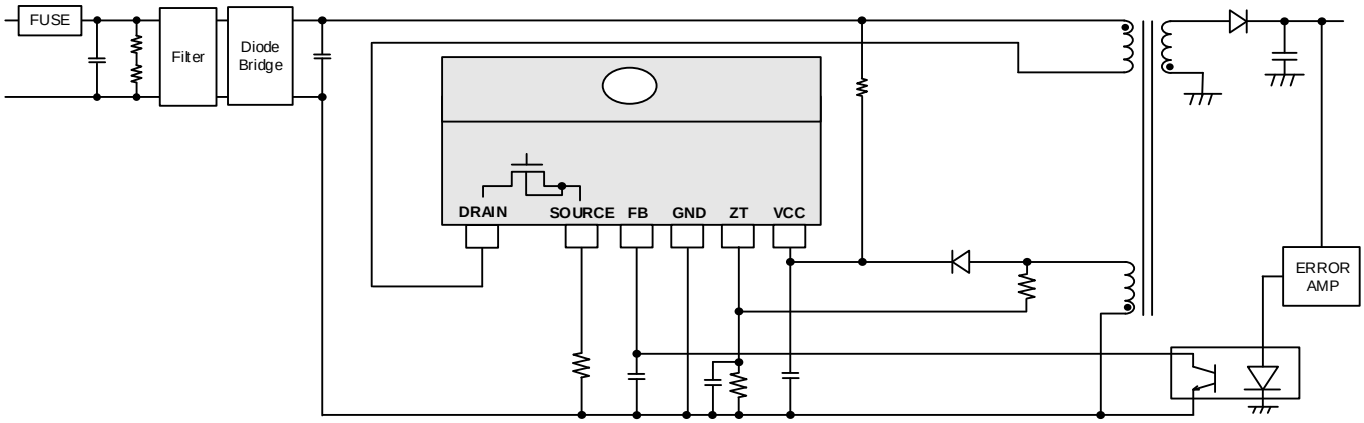

○Product structure :Silicon and silicon carbide integrated circuit ○This product has no designed protection against radioactive rays

© 2018 ROHM Co., Ltd. All rights reserved.

Pin Configuration

(TOP VIEW)

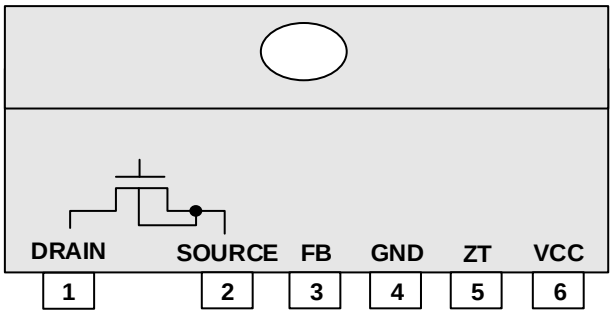

Pin Description

Pin No.	Pin Name	I/O	Function	ESD Diode	
				VCC	GND
1	DRAIN	I/O	MOSFET DRAIN pin	-	✔
2	SOURCE	I	MOSFET SOURCE pin	✔	✔
3	FB	I	Feedback signal input pin	✔	✔
4	GND	I/O	GND pin	✔	-
5	ZT	I	Zero current detection pin	-	✔
6	VCC	I	Power supply input pin	-	✔

© 2018 ROHM Co., Ltd. All rights reserved.

Block Diagram

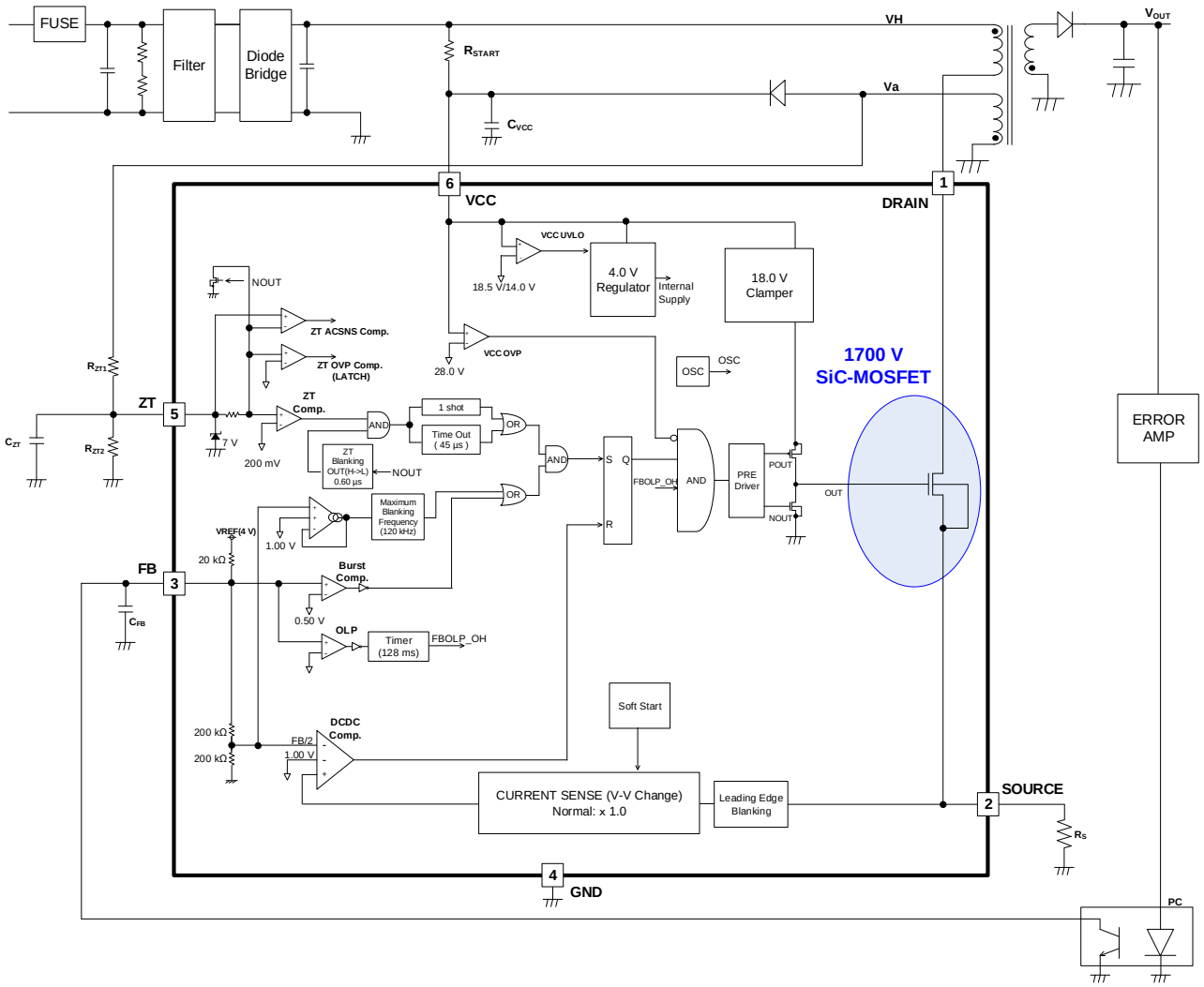

© 2018 ROHM Co., Ltd. All rights reserved.

Description of Blocks

1 Startup Sequences (FB OLP: Auto Recovery Mode)

The BM2SCQ12xT-LBZ's startup sequence is shown in Figure 1.
See the sections below for the detailed descriptions.

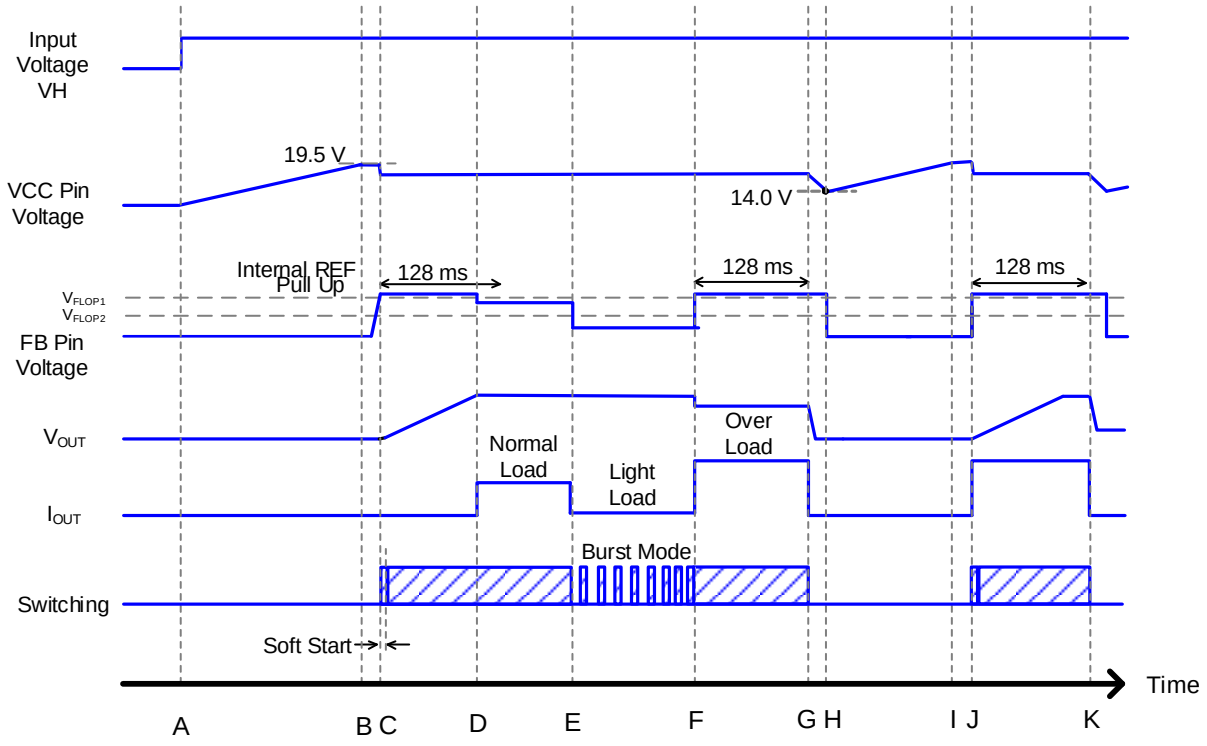

Figure 1. Startup Sequence Timing Chart

A: The input voltage VH is applied.
B: The VCC pin voltage rises due to start resistor R_{START}, and this IC starts operating when the VCC pin voltage becomes higher than V_{UVLO1} (Typ = 19.5 V). When the protection functions are judged as normal status, the switching operation starts. At that time, since the VCC pin voltage value always drops due to the pin's consumption current, it is necessary to set the VCC pin voltage to higher than V_{UVLO2} (Typ = 14.0 V).
C: The IC has a soft start function which regulates the voltage level at the SOURCE pin to prevent an excessive rise in voltage and current.
D: When the switching operation starts, V_{OUT} rises. At startup, the output voltage should be set to the regulated voltage within t_{FOLP} period (Typ = 128 ms).
E: At a light load, the IC starts burst operation in order to keep power consumption down.
F: Overload operation.
G: When the FB pin voltage keeps being more than V_{FOLP1} (Typ = 2.8 V) for t_{FOLP} (Typ = 128 ms) or more, the switching operation is stopped by the overload protection circuit. If the FB pin voltage status becomes less than V_{FOLP2}(Typ = 2.6 V) even once, t_{FOLP} (Typ = 128 ms) timer is reset
H: When the VCC pin voltage becomes V_{UVLO2} (Typ = 14.0 V) or less, restart is executed.
I: The IC's circuit current is reduced and the VCC pin voltage rises. (Same as B)
J: Same as F.
K: Same as G.

© 2018 ROHM Co., Ltd. All rights reserved.

1 Startup Sequences (FB OLP: Auto Recovery Mode) – continued

Start resistance R_{START} is the resistance required to start the IC. If the start resistance R_{START} value is set to low, the standby power becomes large and the startup time becomes short. Conversely, if the start resistance R_{START} value is set to large, standby power becomes low and the startup time becomes long. The standby current I_{OFF} of BM2SCQ12xT-LBZ is 30 μA (Max). However, this is the minimum current required to start the IC. It is necessary to set the appropriate current value for the set target.

e.g. Start Resistance R_{START} Setting

$$R_{START} < (V_{MIN} - V_{UVLO}(Max)) \div I_{OFF} \quad [\Omega]$$

Where:
R_{START} is the start resistance.
V_{MIN} is the minimum AC voltage.
V_{UVLO} is the VCC UVLO voltage.
I_{OFF} is the standby current.

When the AC input voltage is AC 80 V, V_{MIN} = 113 V.
And it can be calculated as (113 - 20)/30 μA = 3.1 MΩ because V_{UVLO1} (Max) = 20.0 V at this time.
Considering the optimal value for the resistor which is 3.1 MΩ or less and set R_{START} to 3.0 MΩ.
The power dissipation at this time is calculated by the formula below.

$$Pd(R_{START}) = (VH - V_{CC})^2 \div R_{START} = (141V - 14\text{V})^2 \div 3.0M\Omega = 5.4 \text{ [mW]}$$

Where:
Pd is the power dissipation.
R_{START} is the start resistance.
VH is the input voltage.
V_{CC} is the IC power supply voltage.

© 2018 ROHM Co., Ltd. All rights reserved.

Description of Blocks – continued

2 VCC Pin Protection Function

BM2SCQ12xT-LBZ includes the VCC low voltage protection function VCC UVLO and the VCC over voltage protection function VCC OVP. These functions prevent the abnormal voltage-related break in MOSFETs used for switching. The VCC UVLO function is an auto recovery type comparator with voltage hysteresis and the VCC OVP function is the comparator uses latch mode or auto recovery mode. After latch function is detected by VCC OVP, latching is released (reset) when the condition the VCC pin voltage < V_{LATCH} (Typ = V_{UVLO2} - 3.5 V) is met. This operation is shown in Figure 2. And VCC OVP has a built-in mask time t_{LATCH} (Typ = 150 µs). This function masks such as the surges occur at the pin.

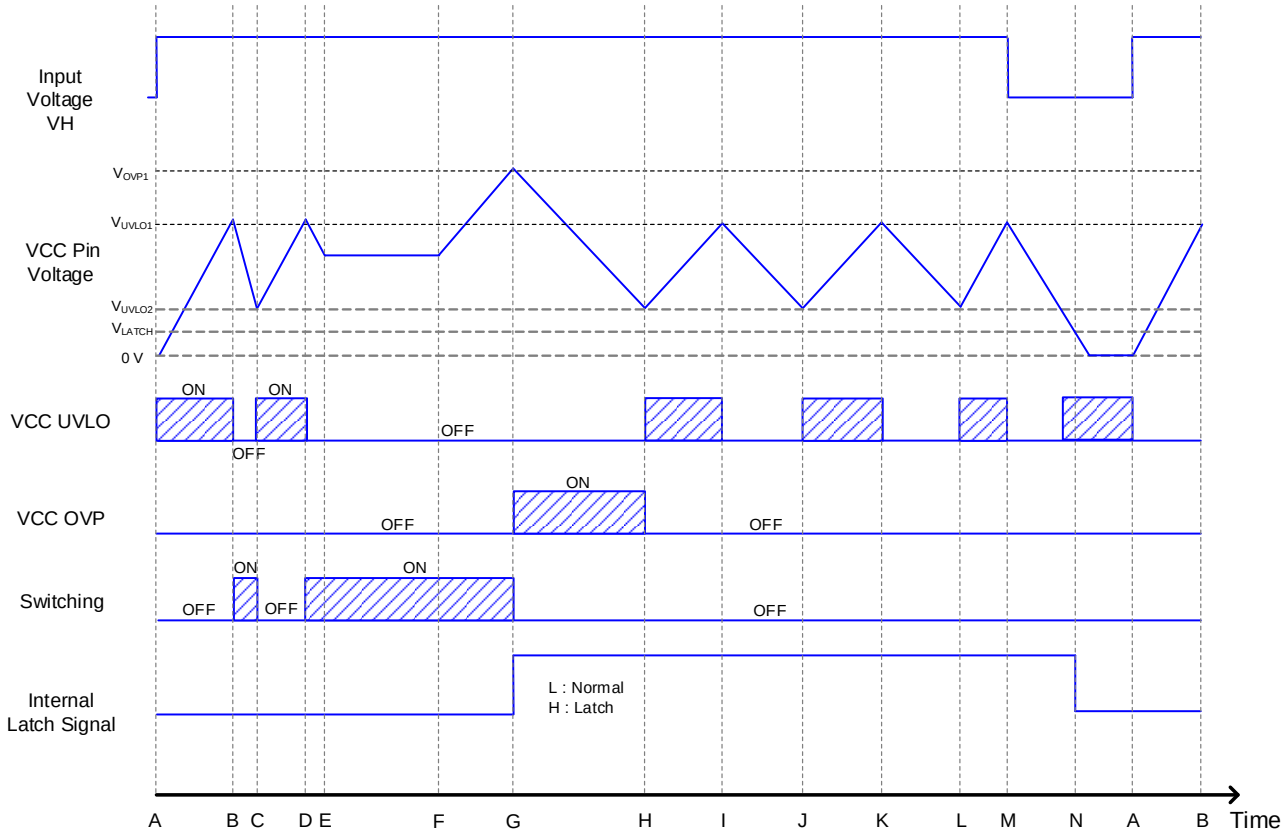

Figure 2. VCC UVLO/OVP (Latch Mode)

A: VH is applied, the VCC voltage rises.
B: When the VCC pin voltage is higher than V_{UVLO1} (Typ = 19.5 V), the switching operation starts.
C: When the VCC pin voltage is lower than V_{UVLO2} (Typ = 14.0 V), the switching operation stops.
D: When the VCC pin voltage is higher than V_{UVLO1} (Typ = 19.5 V), the switching operation starts.
E: The VCC pin voltage drops until the output voltage is stabilized.
F: The VCC pin voltage rises.
G: When the VCC pin voltage is higher than V_{OVP1} (Typ = 29.5 V), the switching is stopped by an internal latch signal.
H: When the switching operation stops, power supply from the auxiliary coil stops and the VCC pin voltage drops.
I: When the VCC pin voltage is lower than V_{UVLO2} (Typ = 14.0 V), the VCC pin voltage rises because the IC current consumption current drops.
J: When the VCC pin voltage is higher than V_{UVLO1} (Typ = 19.5 V), there are no switching operations because the IC is during latch operation. The VCC pin voltage drops because the IC current consumption current is lowered.
K: Same as H.
L: Same as I.
M: VH is OPEN (unplugged). The VCC pin voltage drops.
N: When the VCC pin voltage < V_{LATCH} (Typ = V_{UVLO2} -3.5 V), it is latch-released.

© 2018 ROHM Co., Ltd. All rights reserved.

Description of Blocks – continued

3 DC/DC Converter Function

BM2SCQ12xT-LBZ uses PFM (Pulse Frequency Modulation) mode control. The FB pin, the ZT pin, and the SOURCE pin are monitored to provide a system optimized as DC/DC. The switching MOSFET ON width (turn OFF) is controlled by the FB pin and the SOURCE pin, and the OFF width (turn ON) is controlled by the ZT pin. By setting maximum frequency, PFM mode will control it to meet noise regulation. A detailed description is below. (Refer to Figure 3)

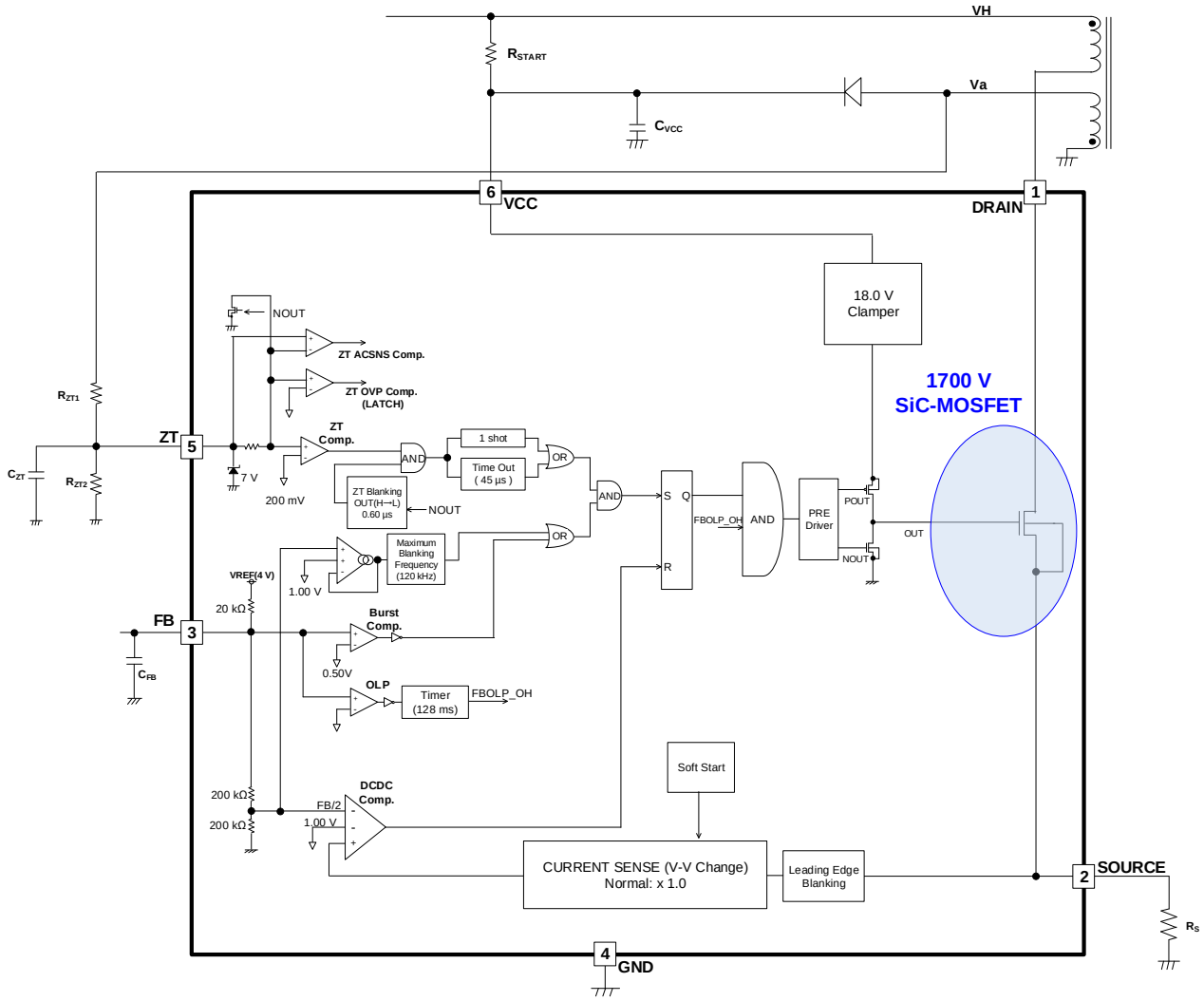

Figure 3. Block Diagram of DC/DC Operations

© 2018 ROHM Co., Ltd. All rights reserved.

3 DC/DC Converter Function – continued

3.1 Determination of ON Width (Turn OFF)

ON width is controlled by the FB pin and SOURCE pin. The ON width is determined by comparing the FB pin voltage at 1/AV (Typ = 1/2) with the SOURCE pin voltage. In addition, the comparator level is changed by comparing with the IC's internally generated V_{LIM1A} (Typ = 1.0 V), as is shown in Figure 4. The SOURCE pin is also used for the over current limiter circuit per pulse. Changes at the FB pin changes in the maximum blanking frequency and over current limiter level.

mode 1: Burst operation
mode 2: Frequency reduction operation (reduces maximum frequency)
mode 3: Maximum frequency operation (operates at maximum frequency)
mode 4: Overload operation (pulse operation is stopped when overload is detected)

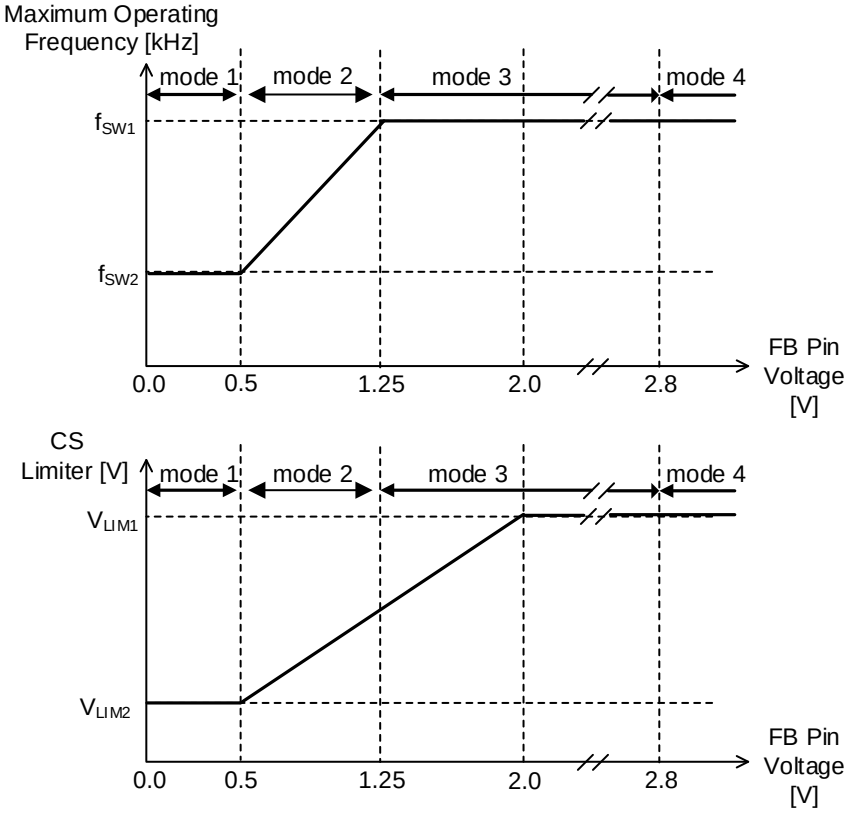

Figure 4. Relationship of FB Pin Voltage to Over Current Limiter and Maximum Frequency

The switch of over current protection in the soft start function and input voltage is performed by adjusting the over current limiter lever. In this case, the V_{LIM1} and V_{LIM2} values are as listed below.

Table 1. Over Current Protection Voltage

Soft Start	I_{ZT} ≥ -1.0 mA		I_{ZT} < -1.0 mA	
	V_{LIM1A}	V_{LIM2A}	V_{LIM1B}	V_{LIM2B}
from startup to less than 1 ms	0.250 V (25.0 %)	0.063 V (6.3 %)	0.175 V (17.5 %)	0.047 V (4.7 %)
from 1 ms to less than 4 ms	0.500 V (50.0 %)	0.125 V (12.5 %)	0.350 V (35.0 %)	0.094 V (9.4 %)
4 ms or more	1.000 V (100.0 %)	0.250 V (25.0 %)	0.700 V (70.0 %)	0.188 V (18.8 %)

(Note) Values those compared to V_{LIM1A} (Typ = 1.0 V) during I_{ZT} ≥ -1.0 mA are shown in ().

3.2 L.E.B. (Leading Edge Blanking) Function

When the switching MOSFET is turned ON, surge current occur at each capacitor component and drive current. Therefore, when the SOURCE pin voltage rises temporarily, detection errors may occur in the over current limiter circuit. To prevent detection errors, BM2SCQ12xT-LBZ has the blanking function. This function masks the SOURCE pin voltage for t_{LEB} (Typ = 250 ns) after the DRAIN pin changes from high to low. This blanking function reduces the SOURCE pin noise filter.

© 2018 ROHM Co., Ltd. All rights reserved.

3 DC/DC Converter Function – continued

3.3 SOURCE Over Current Protection Switching Function

When the input voltage (VH) becomes high, the ON time is shortened and the operating frequency increases. As a result, the maximum rated power is increased for a certain over current limiter. As a countermeasure, the IC will use its internal over current protection function to switch. In case of high voltage, the over current comparator value which determines the ON time is multiplied by 0.7 of normal operation.

Detection and switch are performed by monitoring the ZT inflow current. When the MOSFET is turned ON, Va becomes a negative voltage dependent on the input voltage (VH). The ZT pin is clamped to nearly 0 V in the IC. The formula used to calculate this is shown below. A block diagram is shown in Figure 5. Also, graphs are shown in Figure 6, Figure 7 and Figure 8.

$$I_{ZT} = (Va - V_{ZT}) \div R_{ZT1} = Va \div R_{ZT1} = VH \times Na \div Np \div R_{ZT1} \quad [A]$$

$$R_{ZT1} = Va \div I_{ZT} \quad [\Omega]$$

Where:
I_{ZT} is the ZT inflow current.
Va is the auxiliary winding voltage.
V_{ZT} is the ZT pin voltage.
R_{ZT1} is the ZT pin resistance 1.
VH is the input voltage.
Na is the primary side winding.
Np is the auxiliary winding.

From the above, the VH voltage is set with a resistance value (R_{ZT1}). The ZT bottom detection voltage is determined at that time, therefore, set the timing with C_{ZT}.

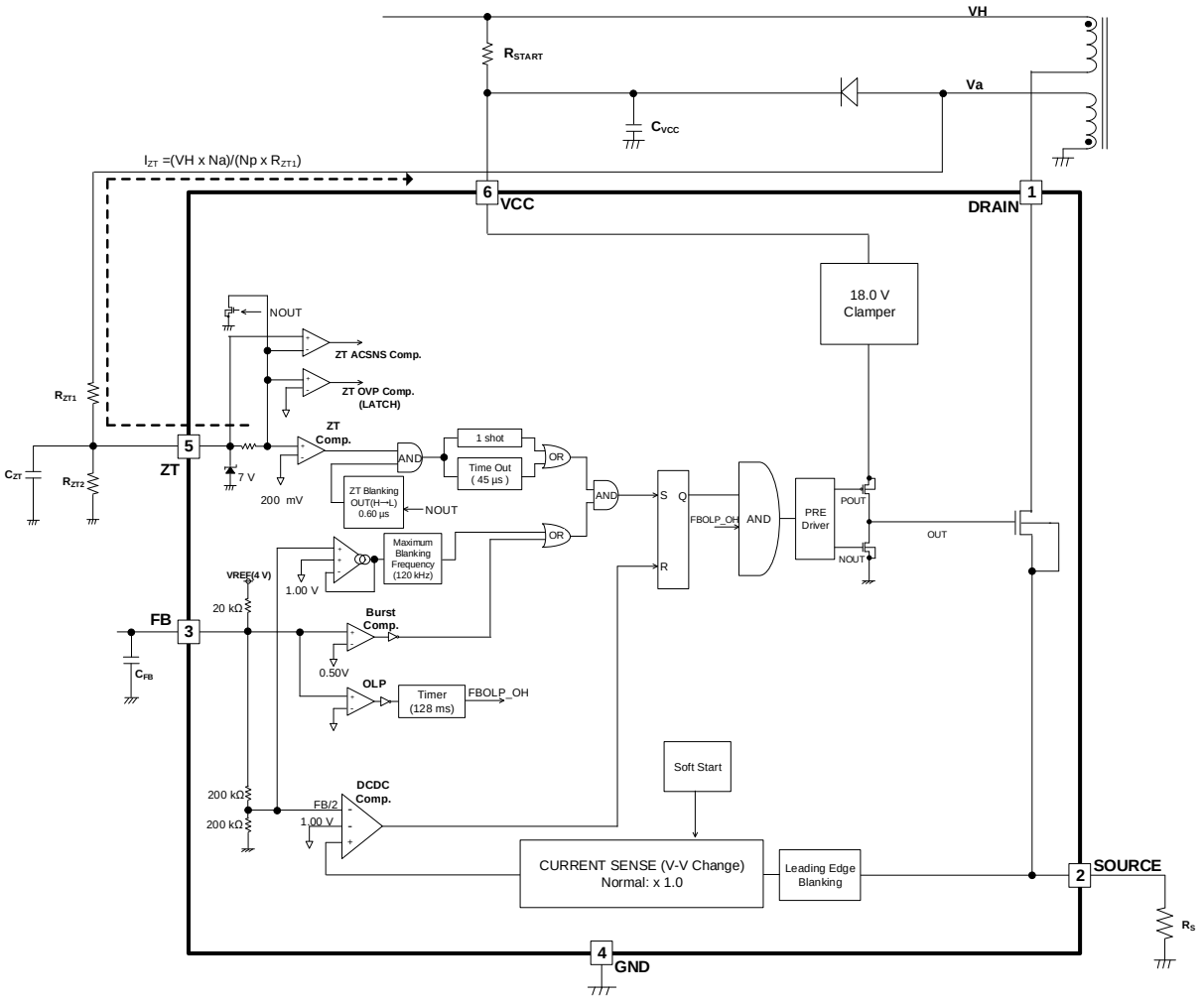

Figure 5. Block Diagram of SOURCE Switching Current

© 2018 ROHM Co., Ltd. All rights reserved.

3.3 SOURCE Over Current Protection Switching Function – continued

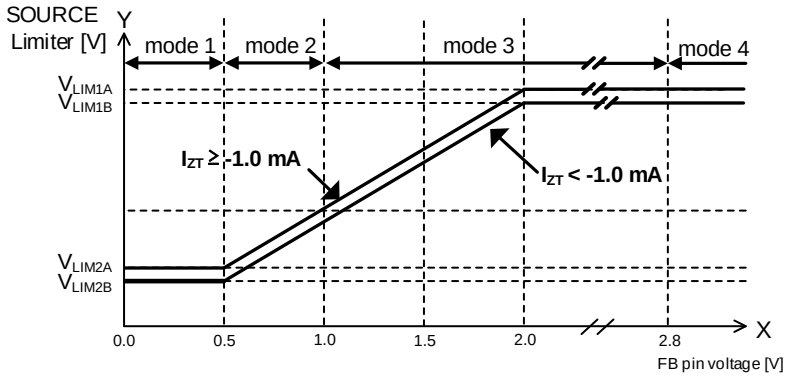

Figure 6. SOURCE Switching: SOURCE Limiter vs FB Pin Voltage

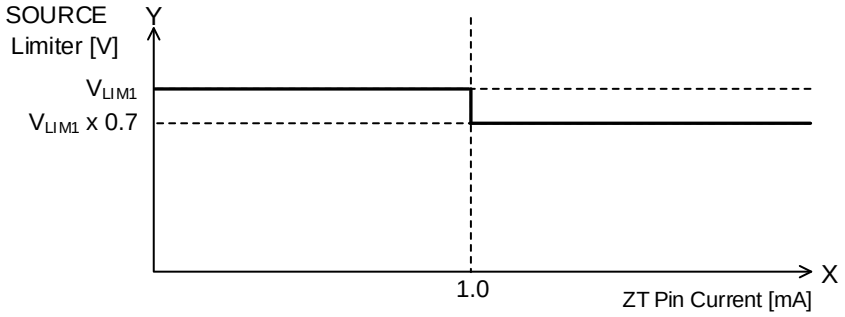

Figure 7. SOURCE Switching: SOURCE Limiter vs ZT Pin Current

e.g. Setup method (for switching between 100 V AC and 220 V AC.)
100 V AC: 141 V ±42 V (±30 % margin)
220 V AC: 308 V ±62 V (±20 % margin)
In the above cases, the SOURCE current is switched in the range from 182 V to 246 V.
→ This is done when VH = 214 V.
Given: Np = 100, Na = 15.

$$Va = V_{IN} \times Na \div Np = 214V \times 15 \div 100 \times (-1) = -32.1 \quad [V]$$
$$R_{ZT} = Va \div I_{ZT} = -32.1V \div -1mA = 32.1 \quad [k\Omega]$$

Where:
Va is the auxiliary winding voltage.
V_{IN} is the input voltage.
Na is the primary side winding.
Np is the auxiliary side winding.
R_{ZT} is the ZT pin resistance.
I_{ZT} is the ZT pin inflow current.

According to the above, R_{ZT} = 32 kΩ is set.

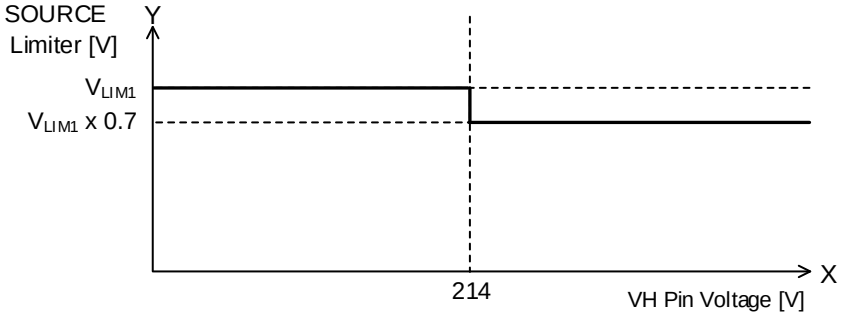

Figure 8. Example of SOURCE Switching: SOURCE Limiter vs VH Pin Voltage

© 2018 ROHM Co., Ltd. All rights reserved.

3 DC/DC Converter Function – continued

3.4 Determination of OFF Width (Turn ON)

The OFF width is controlled at the ZT pin. While switching is OFF, the power stored in the coil is supplied to the secondary side output capacitor. When this power supply ends, there is no more current flowing to the secondary side, so the DRAIN pin of switching MOS voltage drops. Consequently, the voltage on the auxiliary coil side also drops.

A voltage that was resistance-divided by R_{ZT1} and R_{ZT2} is applied to the ZT pin. When this voltage level drops to V_{ZT1} (Typ = 100 mV) or below, switching is turned ON by the ZT comparator. To detect zero current status at the ZT pin, time constants are generated using C_{ZT}, R_{ZT1}, and R_{ZT2}. Additionally, the ZT trigger mask and the ZT timeout function are built-in.

3.5 ZT Pin Trigger Mask Function

When the switching is set OFF from ON, superposition of noise may occur at the ZT pin. At this time, the ZT comparator is masked for the t_{ZTMASK} (Typ = 0.60 µs) to prevent the ZT comparator operate errors. (Refer to Figure 9)

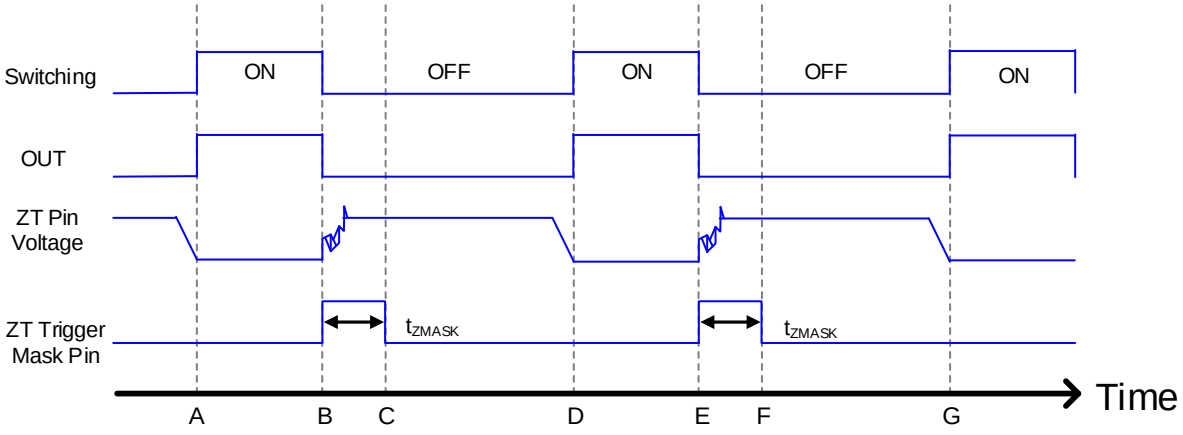

Figure 9. ZT Pin Trigger Mask Function

A: Switching is OFF→ON
B: Switching is ON→OFF
C: Because noise occurs at the ZT pin, the ZT comparator is not operated during t_{ZTMASK} (Typ = 0.60 µs).
D: Same as A.
E: Same as B.
F: Same as C.
G: Same as A.

© 2018 ROHM Co., Ltd. All rights reserved.

3 DC/DC Converter Function – continued

3.6 ZT Timeout Function

ZT Timeout Function 1

When the ZT pin voltage is not higher than V_{ZT2} (Typ = 200 mV) during t_{ZTOUT1} (Typ = 45 µs) because of the decrease of output voltage or the shorted ZT pin such as at startup, this function turns on the switching by force.

ZT Timeout Function 2

After the ZT comparator detects the bottom, the IC turns on MOSFET by force when the IC does not operate next detection within t_{ZTOUT2} (Typ = 5.0 µs). After the ZT comparator detected signal once, this function operates. For that, it does not operate at startup or at low output voltage. When the IC is not able to detect bottom by decreasing auxiliary winding voltage, the function operates.

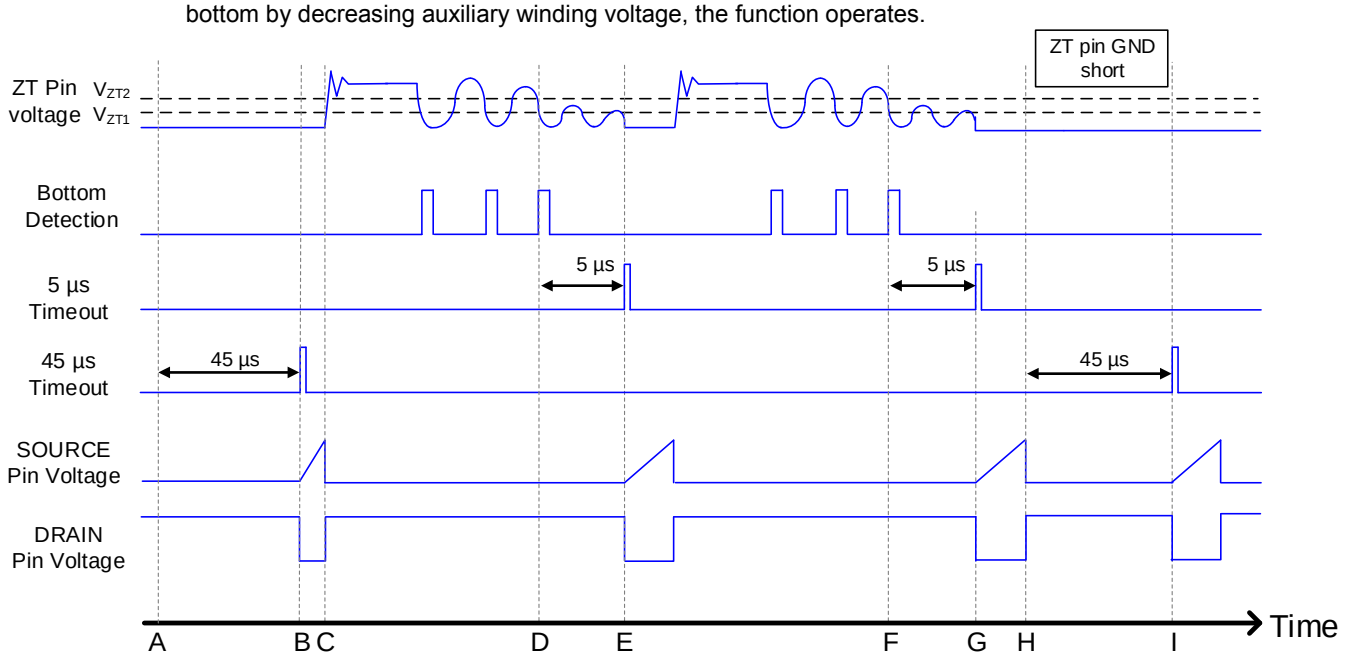

Figure 10. ZT Timeout Function

A: At startup, the IC starts to operate by ZT timeout function1 because of the ZT pin voltage is 0 V.
B: MOSFET turns ON.
C: MOSFET turns OFF.
D: The ZT pin voltage drops to lower than V_{ZT2} (Typ = 200 mV) by the oscillation decreasing.
E: MOSFET turns ON after t_{ZTOUT2} (Typ = 5.0 µs) from D point by ZT timeout function 2.
F: The ZT pin voltage drops to lower than V_{ZT2} (Typ = 200 mV) by the oscillation decreasing.
G: MOSFET turns ON after t_{ZTOUT2} (Typ = 5.0 µs) from F point by ZT timeout function 2.
H: The ZT pin is shorted to GND.
I: MOSFET turns ON after t_{ZTOUT1} (Typ = 45.0 µs) by ZT timeout function 1.

© 2018 ROHM Co., Ltd. All rights reserved.

Description of Blocks – continued

4 Soft Start Function

Normally, a large current flows to the AC/DC power supply when the AC power supply is turned ON. BM2SCQ12xT-LBZ includes a soft start function to prevent large changes in the output voltage current during startup. This function is performed when the VCC pin voltage drops to V_{UVLO2} (Typ = 14.0 V) or less.

Soft start function performs the following operation after startup. (Refer to turn OFF described above in section 3.1).

- from startup to less than 1 ms → Set the SOURCE limiter value to 25 % of normal
- from 1 ms to less than 4 ms → Set the SOURCE limiter value to 50 % of normal
- 4 ms or more → Normal operation

5 Over Load Protection Function

The overload protection function monitors the overload status of the secondary output current at the FB pin and fixes the OUT pin at low level when the overload status is detected. During overload status, current no longer flows to the photo-coupler, so the FB pin voltage rises. When this status continues for the t_{FOLP} (Typ = 128 ms), it judges the status as an overload and the OUT pin is fixed at low level. If the FB pin voltage drops to lower than V_{FOLP2} (Typ = 2.6 V) within t_{FOLP} (Typ = 128 ms) after once it exceeds V_{FOLP1} (Typ = 2.8 V), the overload protection timer is reset.
At startup, the FB pin voltage is pulled up to the internal voltage by a pull-up resistor, so operation starts from V_{FOLP1} (Typ = 2.8 V) or above. Therefore, it is necessary for the design to set the FB pin voltage at V_{FOLP2} (Typ = 2.6 V) or below within t_{FOLP} (Typ = 128 ms). In other words, the startup time of the secondary output voltage must be set to within t_{FOLP} (Typ = 128 ms) after the IC starts.
To release latching at selecting latch mode is operated when the VCC pin voltage becomes lower than V_{LATCH} (Typ = V_{UVLO2} - 3.5 V) by unplugging power supply.

6 ZT OVP (Over Voltage Protection)

ZT OVP (Over Voltage Protection) function is built-in the ZT pin. When the ZT pin voltage reaches V_{ZTL} (Typ = 3.5 V), this function operates detection. The ZT pin OVP function is performed in latch mode.
ZT OVP function has a built-in mask time defined as t_{LATCH} (Typ = 150 µs). This operates detection when ZT OVP status continues for t_{LATCH} (Typ = 150 µs). This function masks such as surges those occur at the pin. Refer to Figure 11. (A similar t_{LATCH} (Typ = 150 µs) is built-in VCC OVP.)

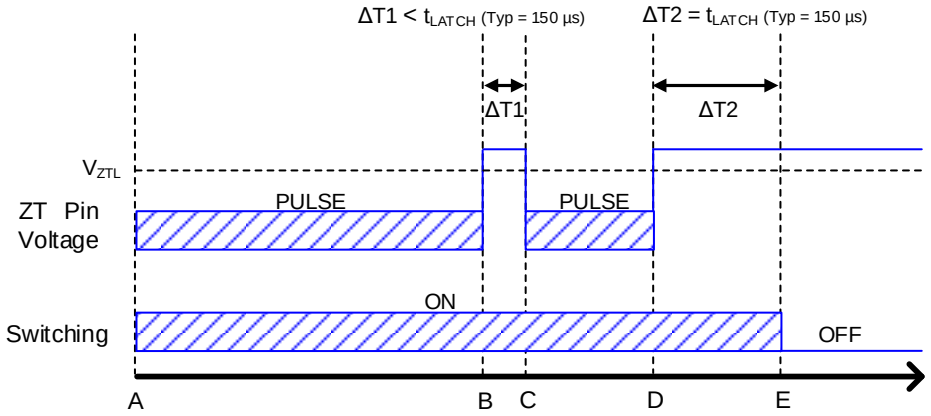

Figure 11. ZT OVP and Latch Mask Function

A: Switching turns ON and the ZT pin starts pulse operation.
B: The ZT pin voltage > V_{ZTL} (Typ = 3.5 V).
C: The status of the ZT pin voltage > V_{ZTL} (Typ = 3.5 V) is within t_{LATCH} (Typ = 150 µs), so the switching is reset to the normal operations.
D: The ZT pin voltage > V_{ZTL} (Typ = 3.5 V).
E: The status of ZT pin voltage > V_{ZTL} (Typ = 3.5 V) continues for t_{LATCH} (Typ = 150 µs), so latching occurs and the switching turned OFF.

© 2018 ROHM Co., Ltd. All rights reserved.

Description of Blocks – continued

7 Thermal Shutdown Function

Thermal Shutdown function is auto restart type. When VCC UVLO is released, the IC starts from state 2 because of preventing from thermal destruction of external parts. At startup, it does not start until the temperature becomes T1 or below. (Refer to Figure 12.)

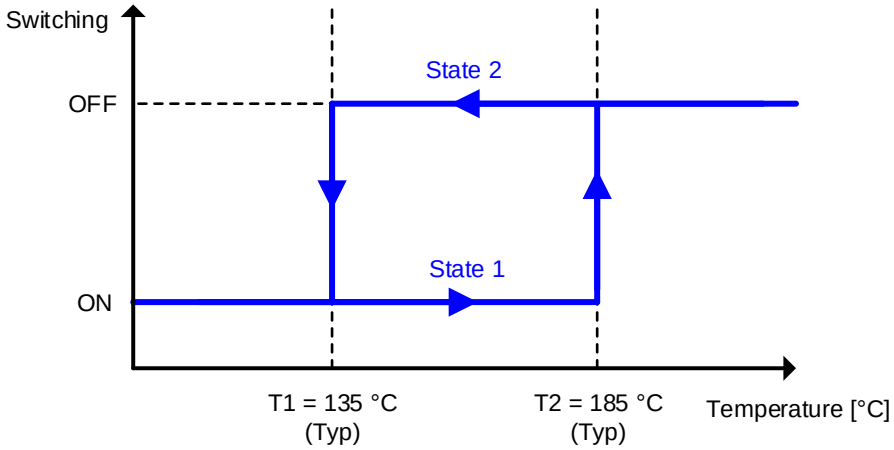

Figure 12. Thermal Shutdown Function

Operation Modes of Protection Circuit

Table 2 below lists the operation modes of the various protection functions.

Table 2. Operation Modes of Protection Circuit

Item	Operation Mode
VCC Under Voltage Locked Out	Auto recovery
VCC Over Voltage Protection	BM2SCQ121T-LBZ/BM2SCQ123T-LBZ = Auto recovery BM2SCQ122T-LBZ/BM2SCQ124T-LBZ = Latch
FB Over Limited Protection	BM2SCQ121T-LBZ/BM2SCQ122T-LBZ = Auto recovery BM2SCQ123T-LBZ/BM2SCQ124T-LBZ = Latch
ZT Over Voltage Protection	Latch
Thermal Shutdown	Auto recovery

© 2018 ROHM Co., Ltd. All rights reserved.

Absolute Maximum Ratings (Ta = 25 °C)

Parameter	Symbol	Rating	Unit	Conditions
Maximum Applied Voltage 1	V_{MAX1}	-0.3 to +32	V	The VCC pin
Maximum Applied Voltage 2	V_{MAX2}	-0.3 to +6.5	V	The SOURCE, FB, ZT pin
Maximum Applied Voltage 3	V_{MAX3}	-0.3 to +1700	V	The DRAIN pin
ZT Pin Maximum Current	I_{SZT}	±3.0	mA	
Power Dissipation	Pd	1.50	W	*(Note 1)*
Maximum Junction Temperature	Tjmax	150	°C	
Storage Temperature Range	Tstg	-55 to +150	°C	

Caution 1: *Operating the IC over the absolute maximum ratings may damage the IC. The damage can either be a short circuit between pins or an open circuit between pins and the internal circuitry. Therefore, it is important to consider circuit protection measures, such as adding a fuse, in case the IC is operated over the absolute maximum ratings.*

Caution 2: *Should by any chance the maximum junction temperature rating be exceeded the rise in temperature of the chip may result in deterioration of the properties of the chip. In case of exceeding this absolute maximum rating, design a PCB with power dissipation taken into consideration by increasing board size and copper area so as not to exceed the maximum junction temperature rating.*

(Note 1) When mounted (on 70 mm x 70 mm x 1.6 mm thick, glass epoxy on single-layer substrate) De-rated by 12 mW/°C when operating above Ta = 25 °C

Thermal Loss

The thermal design should be set operation for the following conditions.

1. The ambient temperature Ta must be 105 °C or less.
2. The IC's loss must be within the allowable dissipation Pd.

The thermal dissipation characteristics are as follows.
(PCB: 70 mm x 70 mm x 1.6 mm, mounted on glass epoxy substrate)

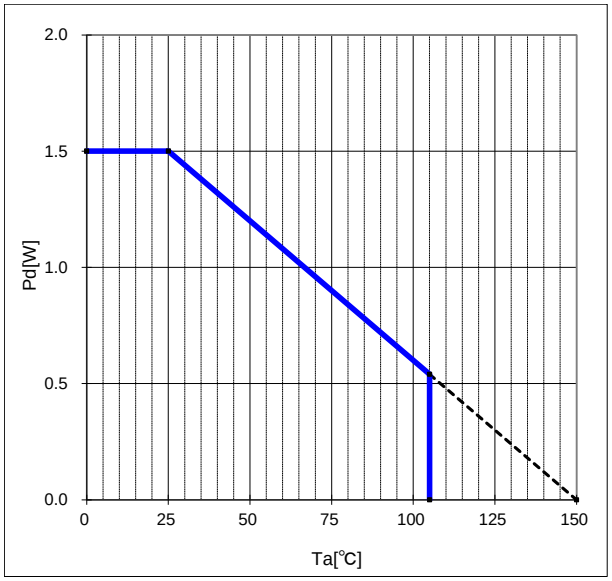

Figure 13. Thermal Abatement Characteristics

Recommended Operating Conditions

Parameter	Symbol	Min	Typ	Max	Unit	Conditions
Operating Power Supply Voltage Range 1	V_{CC}	15.0	24.0	27.5	V	VCC pin voltage
Operating Power Supply Voltage Range 2	V_{DRAIN}	-0.3	-	+1700	V	DRAIN pin voltage
Operating Temperature	Topr	-40	25	+105	°C	

© 2018 ROHM Co., Ltd. All rights reserved.

Electrical Characteristics
(Unless otherwise noted, V_{CC} = 24 V, Ta = 25 °C)

Parameter	Symbol	Min	Typ	Max	Unit	Conditions
[MOSFET]						
Voltage between DRAIN and SOURCE Pin	$V_{(BR)DDS}$	1700	-	-	V	I_D = 1 mA/V_{GS} = 0 V
DRAIN Leak Current	I_{DSS}	-	-	100	μA	V_{DS} = 1700 V/V_{GS} = 0 V
On Resistance	$R_{DS(ON)}$	-	1.12	-	Ω	I_D = 0.25 A/V_{GS} = 18 V
[Operating Current]						
Standby Operating Current	I_{OFF}	10	19	30	μA	V_{CC} = 18.0 V (VCC UVLO = Disable)
Normal Operating Current	I_{ON1}	1000	2000	4000	μA	FB Pin Voltage= 1.0 V (At Pulse Operation)
Burst Operating Current	I_{ON2}	150	500	1000	μA	FB Pin Voltage = 0.0 V (At Burst Operation)
Protection Circuit Operating Current	$I_{PROTECT}$	800	1600	2200	μA	FB OLP, VCC OVP, ZT OVP
[VCC Pin Protection Function]						
VCC UVLO Voltage 1	V_{UVLO1}	19.00	19.50	20.00	V	VCC pin voltage rising
VCC UVLO Voltage 2	V_{UVLO2}	13.00	14.00	15.00	V	VCC pin voltage falling
VCC UVLO Hysteresis Voltage	V_{UVLO3}	-	5.50	-	V	V_{UVLO3} = V_{UVLO1} - V_{UVLO2}
VCC OVP Voltage 1	V_{OVP1}	27.50	29.50	31.50	V	VCC pin voltage rising
VCC OVP Voltage 2	V_{OVP2}	21.00	23.00	25.00	V	VCC pin voltage falling
VCC OVP Hysteresis Voltage	V_{OVP3}	-	6.50	-	V	V_{OVP3} = V_{OVP1} - V_{OVP2}
Latch Released Voltage	V_{LATCH}	-	V_{UVLO2}-3.5	-	V	VCC pin Voltage
Latch Mask Time	t_{LATCH}	50	150	250	μs	
[DC/DC Converter Block (Turn OFF)]						
FB Pin Pull-up Resistance	R_{FB}	15	20	25	kΩ	
SOURCE Pin Over Current Detection Voltage 1A	V_{LIM1A}	0.950	1.000	1.050	V	FB pin voltage = 2.2 V (I_{ZT} ≥ -1.0 mA)
SOURCE Pin Over Current Detection Voltage 1B	V_{LIM1B}	0.620	0.700	0.780	V	FB pin voltage = 2.2 V (I_{ZT} < -1.0 mA)
SOURCE Pin Over Current Detection Voltage 2A	V_{LIM2A}	0.200	0.300	0.400	V	FB pin voltage = 0.6 V (I_{ZT} ≥ -1.0 mA)
SOURCE Pin Over Current Detection Voltage 2B	V_{LIM2B}	0.140	0.210	0.280	V	FB pin voltage = 0.6 V (I_{ZT} < -1.0 mA)
SOURCE Pin Switching ZT Pin Current	I_{ZT}	0.900	1.000	1.100	mA	
SOURCE Pin Leading Edge Blanking Time	t_{LEB}	-	250	-	ns	
Minimum ON Width	t_{MIN}	-	0.500	-	μs	

© 2018 ROHM Co., Ltd. All rights reserved.

Electrical Characteristics – continued
(Unless otherwise noted, V_{CC} = 24 V, Ta = 25 °C)

Parameter	Symbol	Min	Typ	Max	Unit	Conditions
[DC/DC Converter Block (Turn ON)]						
Maximum Operating Frequency 1	f_{SW1}	106	120	134	kHz	FB pin voltage = 2.0 V
Maximum Operating Frequency 2	f_{SW2}	20	30	40	kHz	FB pin voltage = 0.5 V
FB Pin Frequency Reduction Start Voltage	V_{FBSW1}	1.100	1.250	1.400	V	
FB Pin Frequency Reduction End Voltage 1	V_{FBSW2}	0.400	0.500	0.600	V	
FB Pin Frequency Reduction End Voltage 2	V_{FBSW3}	-	0.550	-	V	
Voltage Gain	AV	1.700	2.000	2.300	V/V	$\Delta V_{FB}/\Delta V_{SOURCE}$
ZT Pin Comparator Voltage 1	V_{ZT1}	60	100	140	mV	ZT pin voltage falling
ZT Pin Comparator Voltage 2	V_{ZT2}	120	200	280	mV	ZT pin voltage rising
ZT Pin Trigger Mask Time	t_{ZTMASK}	0.25	0.60	0.95	µs	For noise prevention after OUT pin voltage H→L
ZT Pin Trigger Timeout Period 1	t_{ZTOUT1}	30.0	45.0	90.0	µs	Count from final ZT pin trigger
ZT Pin Trigger Timeout Period 2	t_{ZTOUT2}	2.0	5.0	8.0	µs	Count from final ZT pin trigger (2 stages)
Maximum ON Time	t_{ZTON}	27.0	45.0	62.0	µs	
[DC/DC Protection Functions]						
Soft Start Time 1	t_{SS1}	0.600	1.000	1.400	ms	
Soft Start Time 2	t_{SS2}	2.400	4.000	5.600	ms	
FB OLP Voltage 1	V_{FOLP1}	2.500	2.800	3.100	V	FB pin voltage rising
FB OLP Voltage 2	V_{FOLP2}	2.300	2.600	2.900	V	FB pin voltage falling
FB OLP Timer	t_{FOLP}	90	128	166	ms	
ZT OVP Voltage	V_{ZTL}	3.250	3.500	3.750	V	

© 2018 ROHM Co., Ltd. All rights reserved.

Typical Performance Curves
(Reference Data)

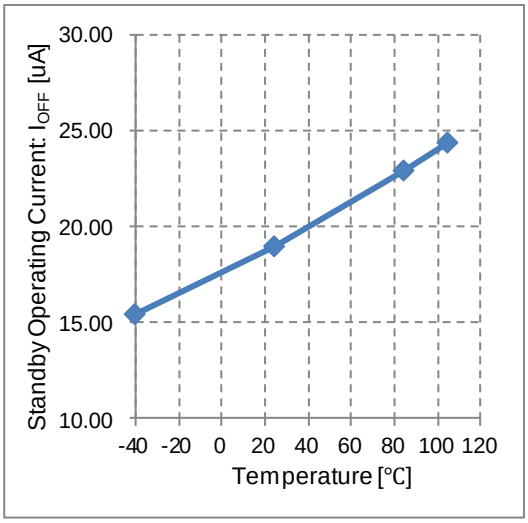

Figure 14. Standby Operating Current vs Temperature

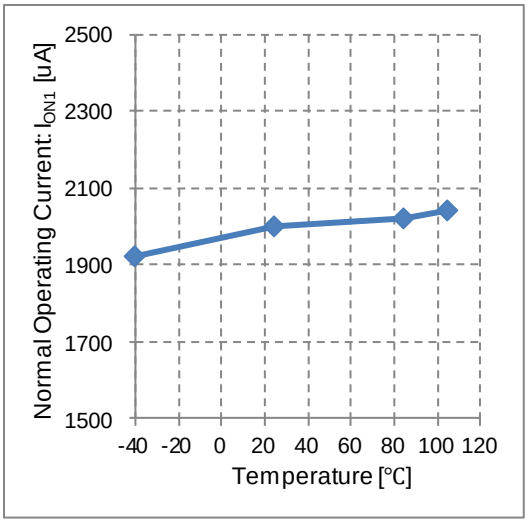

Figure 15. Normal Operating Current vs Temperature

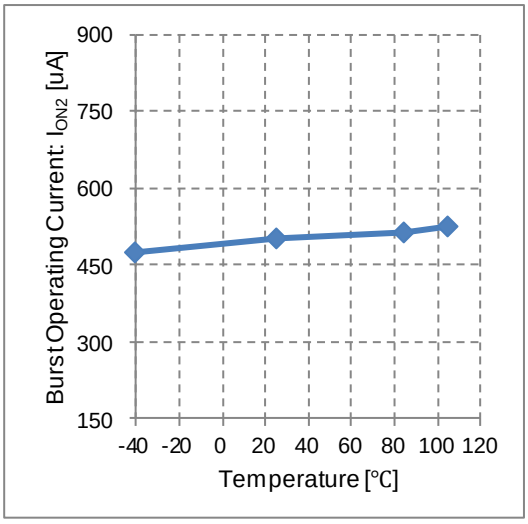

Figure 16. Burst Operating Current vs Temperature

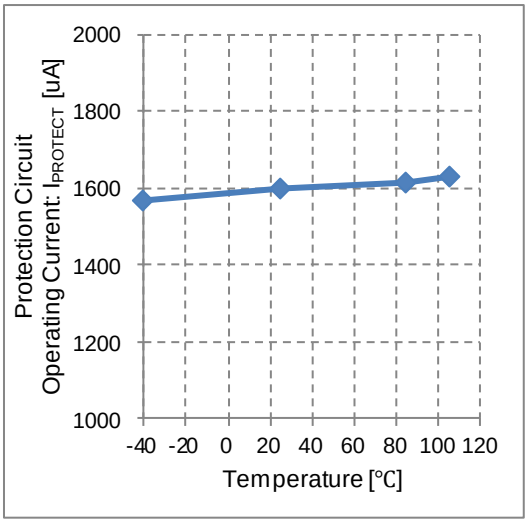

Figure 17. Protection Circuit Operating Current vs Temperature

© 2018 ROHM Co., Ltd. All rights reserved.

Typical Performance Curves – continued
(Reference Data)

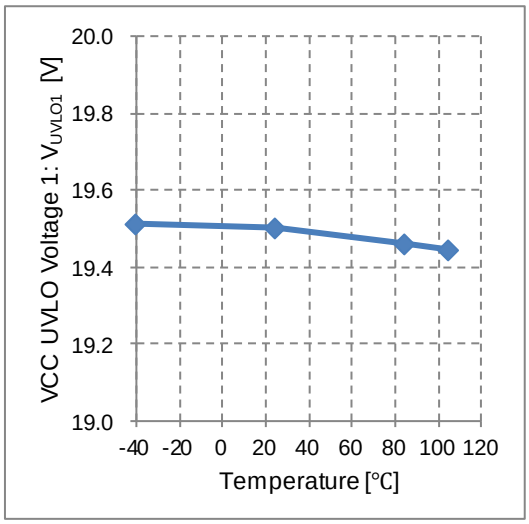

Figure 18. VCC UVLO Voltage 1 vs Temperature

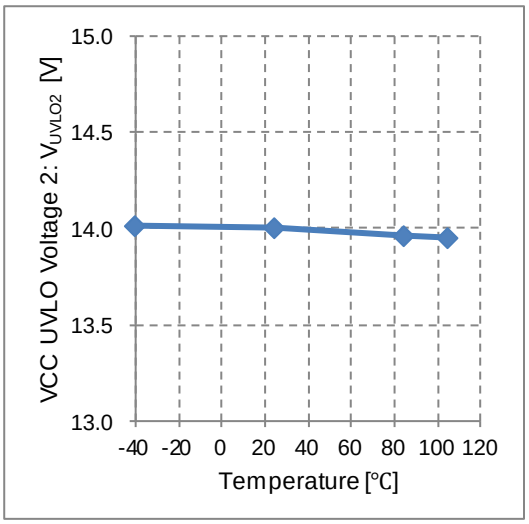

Figure 19. VCC UVLO Voltage 2 vs Temperature

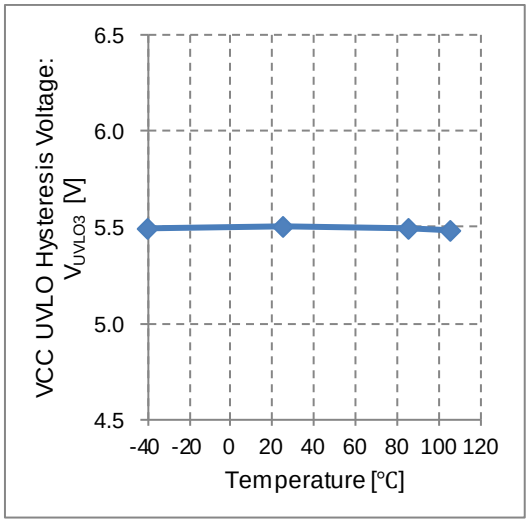

Figure 20. VCC UVLO Hysteresis Voltage vs Temperature

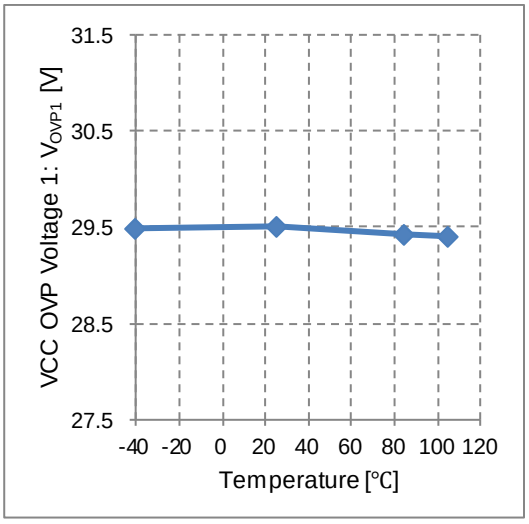

Figure 21. VCC OVP Voltage 1 vs Temperature

© 2018 ROHM Co., Ltd. All rights reserved.

Typical Performance Curves – continued
(Reference Data)

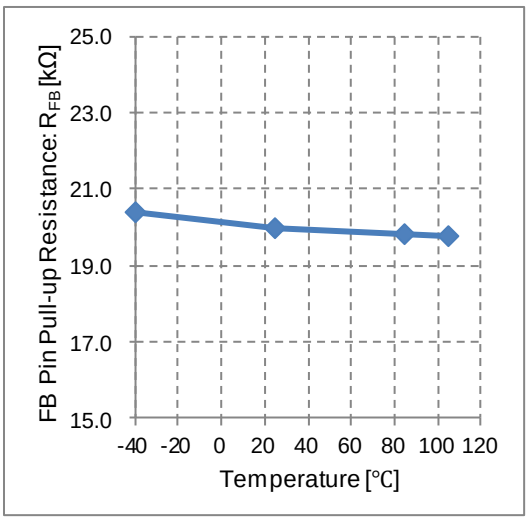

Figure 22. FB Pin Pull-up Resistance vs Temperature

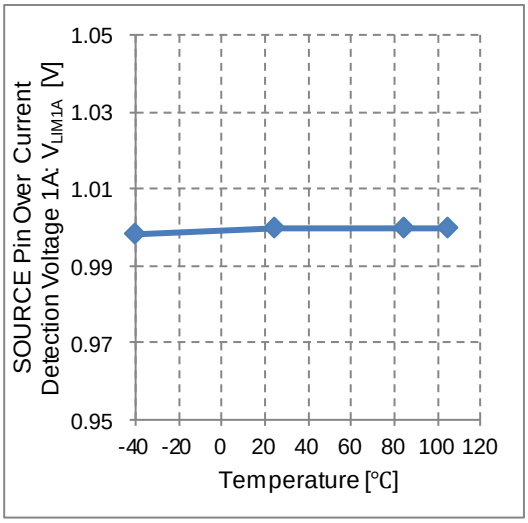

Figure 23. SOURCE Pin Over Current Detection Voltage 1A vs Temperature

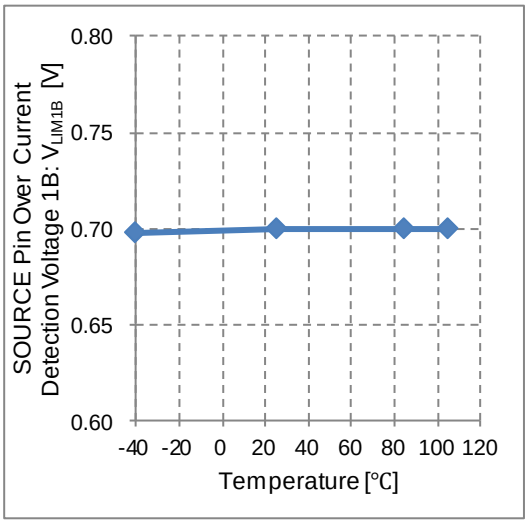

Figure 24. SOURCE Pin Over Current Detection Voltage 1B vs Temperature

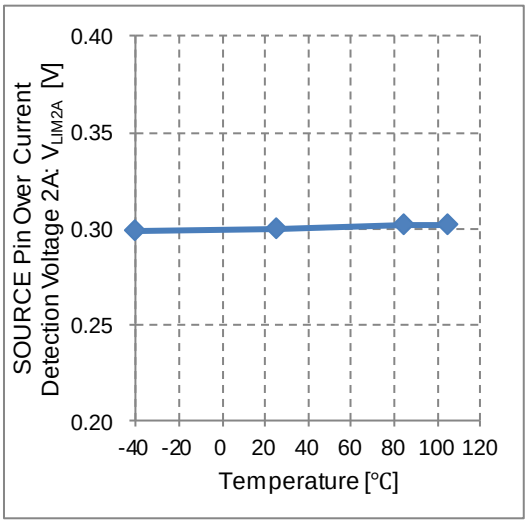

Figure 25. SOURCE Pin Over Current Detection Voltage 2A vs Temperature

© 2018 ROHM Co., Ltd. All rights reserved.

Typical Performance Curves – continued
(Reference Data)

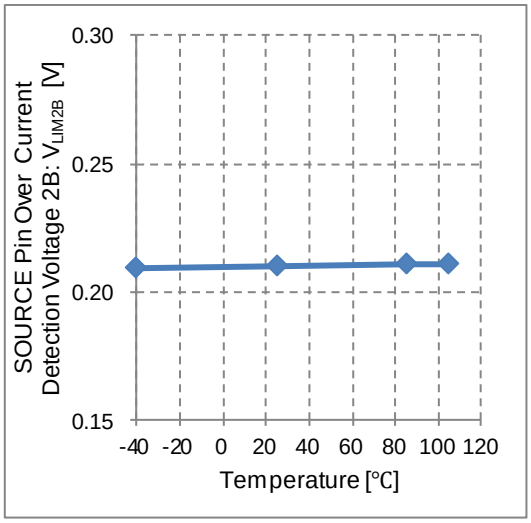

Figure 26 SOURCE Pin Over Current Detection Voltage 2B vs Temperature

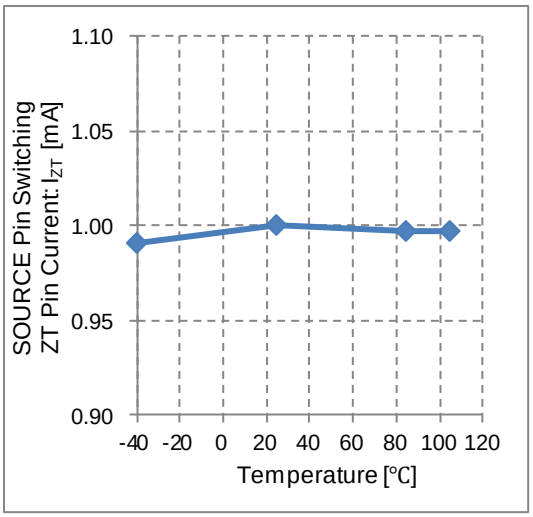

Figure 27. SOURCE Pin Switching ZT Pin Current vs Temperature

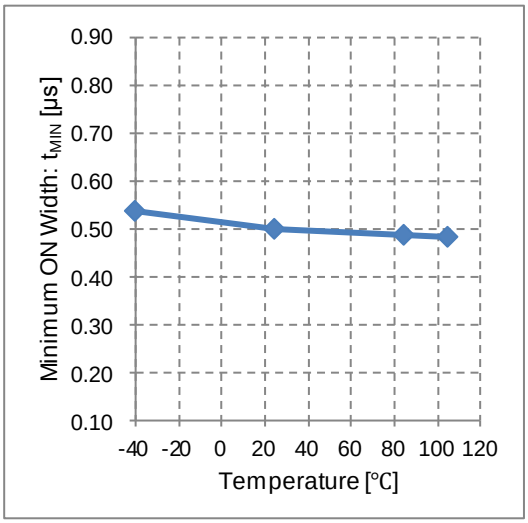

Figure 28. Minimum ON Width vs Temperature

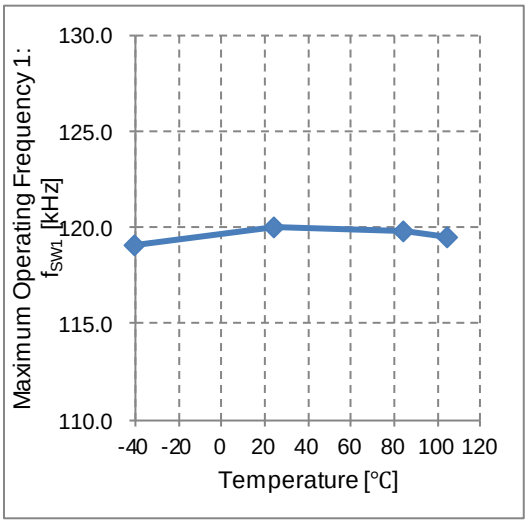

Figure 29. Maximum Operating Frequency 1 vs Temperature

© 2018 ROHM Co., Ltd. All rights reserved.

Typical Performance Curves – continued
(Reference Data)

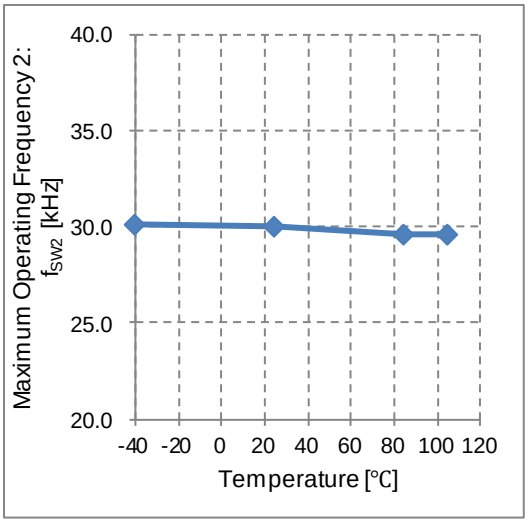

Figure 30. Maximum Operating Frequency 2 vs Temperature

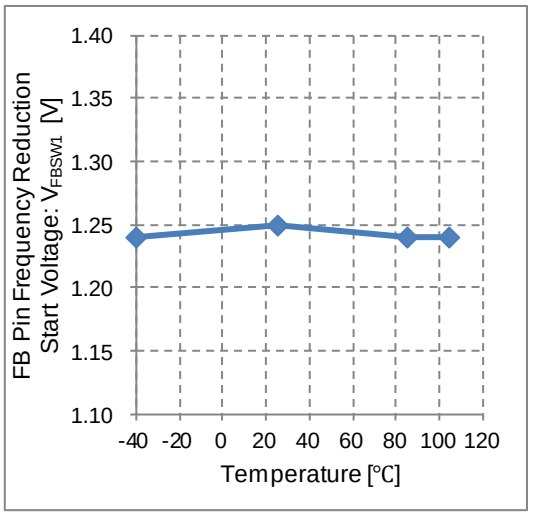

Figure 31. FB Pin Frequency Reduction Start Voltage vs Temperature

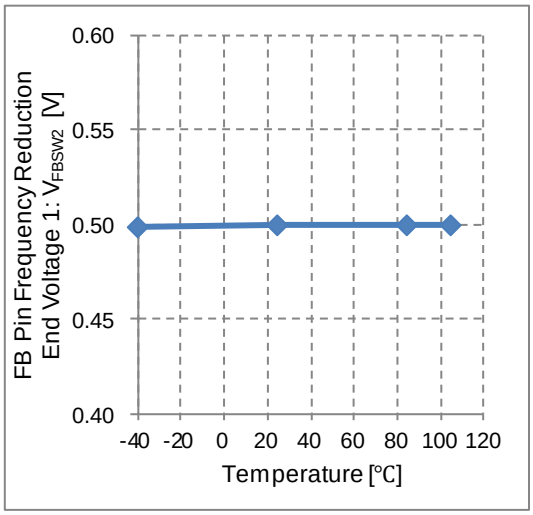

Figure 32. FB Pin Frequency Reduction End Voltage 1 vs Temperature

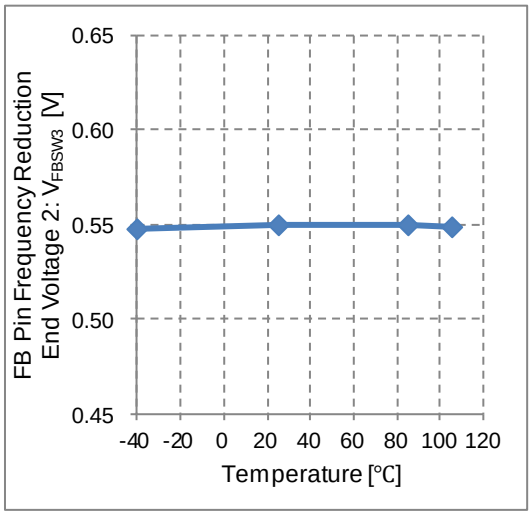

Figure 33 FB Pin Frequency Reduction End Voltage 2 vs Temperature

© 2018 ROHM Co., Ltd. All rights reserved.

Typical Performance Curves – continued
(Reference Data)

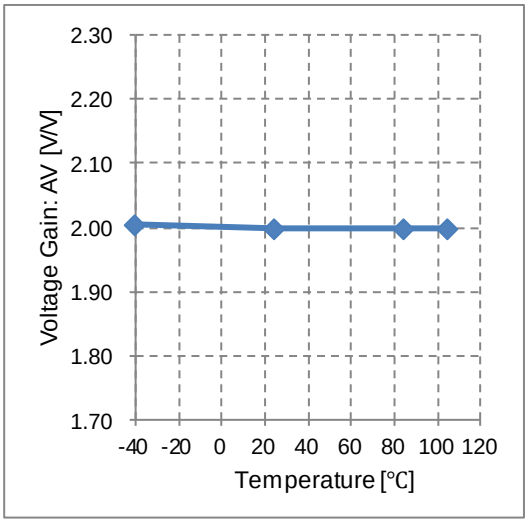

Figure 34. Voltage Gain vs Temperature

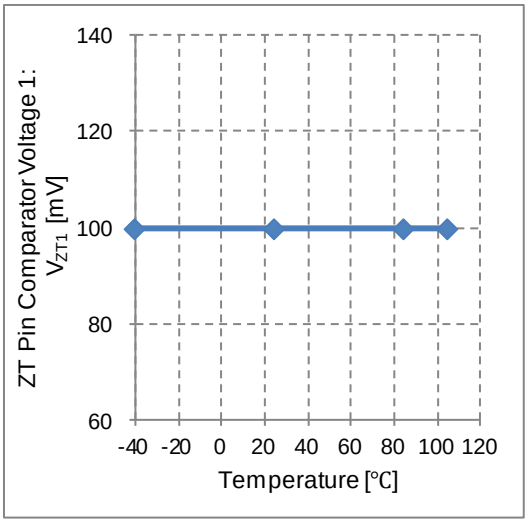

Figure 35. ZT Pin Comparator Voltage 1 vs Temperature

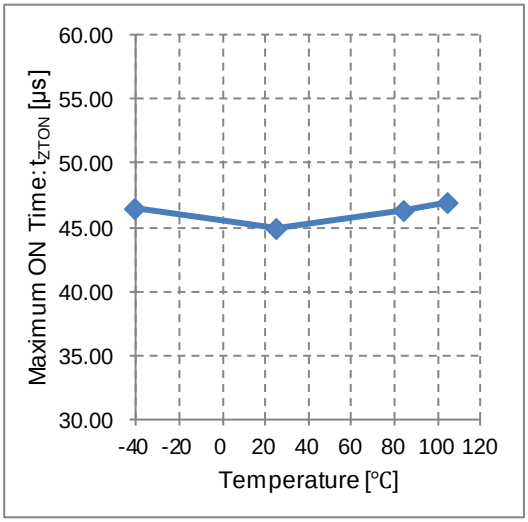

Figure 36. Maximum ON Time vs Temperature

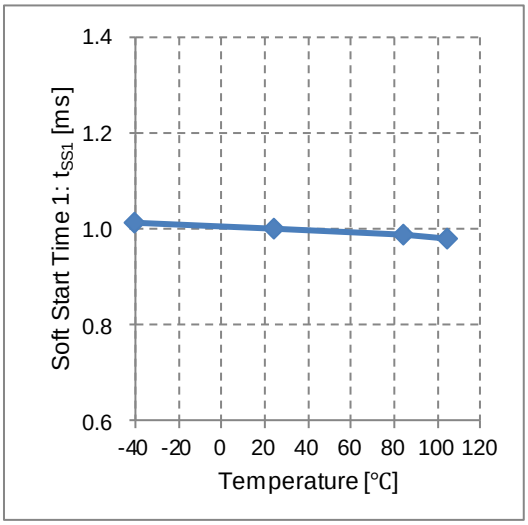

Figure 37. Soft Start Time 1 vs Temperature

© 2018 ROHM Co., Ltd. All rights reserved.

Typical Performance Curves – continued
(Reference Data)

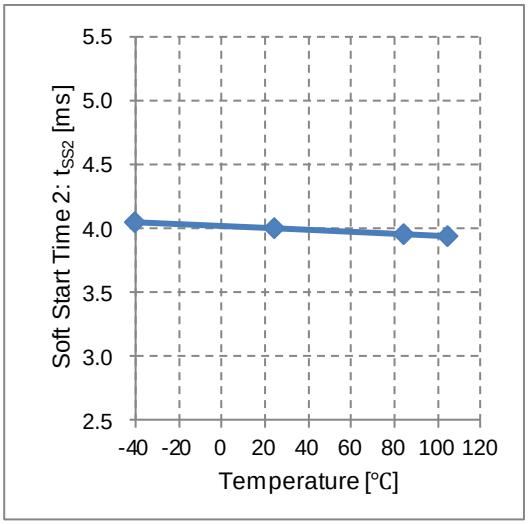

Figure 38. Soft Start Time 2 vs Temperature

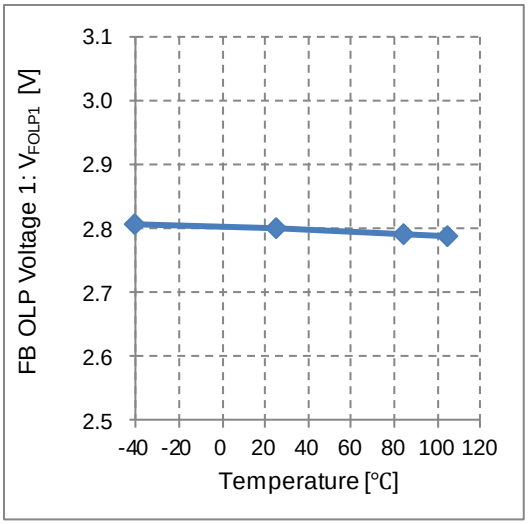

Figure 39. FB OLP Voltage 1 vs Temperature

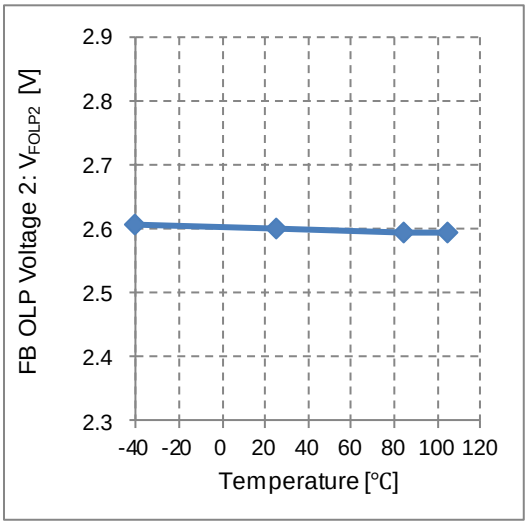

Figure 40. FB OLP Voltage 2 vs Temperature

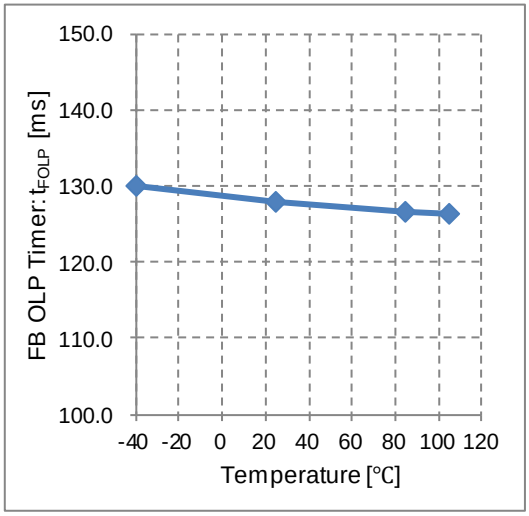

Figure 41. FB OLP Timer vs Temperature

© 2018 ROHM Co., Ltd. All rights reserved.

Typical Performance Curves – continued
(Reference Data)

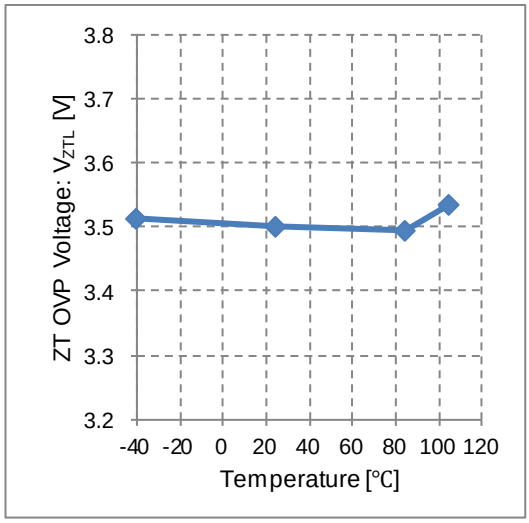

Figure 42. ZT OVP Voltage vs Temperature

I/O Equivalence Circuit

1	DRAIN	2	SOURCE	3	FB	4	GND	5	ZT	6	VCC

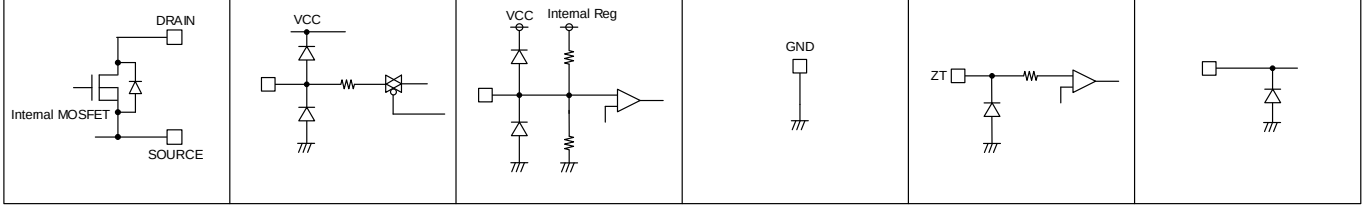

© 2018 ROHM Co., Ltd. All rights reserved.

Operational Notes

1. **Reverse Connection of Power Supply**
   Connecting the power supply in reverse polarity can damage the IC. Take precautions against reverse polarity when connecting the power supply, such as mounting an external diode between the power supply and the IC's power supply pins.

2. **Power Supply Lines**
   Design the PCB layout pattern to provide low impedance supply lines. Separate the ground and supply lines of the digital and analog blocks to prevent noise in the ground and supply lines of the digital block from affecting the analog block. Furthermore, connect a capacitor to ground at all power supply pins. Consider the effect of temperature and aging on the capacitance value when using electrolytic capacitors.

3. **Ground Voltage**
   Ensure that no pins are at a voltage below that of the ground pin at any time, even during transient condition.

4. **Ground Wiring Pattern**
   When using both small-signal and large-current ground traces, the two ground traces should be routed separately but connected to a single ground at the reference point of the application board to avoid fluctuations in the small-signal ground caused by large currents. Also ensure that the ground traces of external components do not cause variations on the ground voltage. The ground lines must be as short and thick as possible to reduce line impedance.

5. **Recommended Operating Conditions**
   The function and operation of the IC are guaranteed within the range specified by the recommended operating conditions. The characteristic values are guaranteed only under the conditions of each item specified by the electrical characteristics.

6. **Inrush Current**
   When power is first supplied to the IC, it is possible that the internal logic may be unstable and inrush current may flow instantaneously due to the internal powering sequence and delays, especially if the IC has more than one power supply. Therefore, give special consideration to power coupling capacitance, power wiring, width of ground wiring, and routing of connections.

7. **Testing on Application Boards**
   When testing the IC on an application board, connecting a capacitor directly to a low-impedance output pin may subject the IC to stress. Always discharge capacitors completely after each process or step. The IC's power supply should always be turned off completely before connecting or removing it from the test setup during the inspection process. To prevent damage from static discharge, ground the IC during assembly and use similar precautions during transport and storage.

8. **Inter-pin Short and Mounting Errors**
   Ensure that the direction and position are correct when mounting the IC on the PCB. Incorrect mounting may result in damaging the IC. Avoid nearby pins being shorted to each other especially to ground, power supply and output pin. Inter-pin shorts could be due to many reasons such as metal particles, water droplets (in very humid environment) and unintentional solder bridge deposited in between pins during assembly to name a few.

9. **Unused Input Pins**
   Input pins of an IC are often connected to the gate of a MOS transistor. The gate has extremely high impedance and extremely low capacitance. If left unconnected, the electric field from the outside can easily charge it. The small charge acquired in this way is enough to produce a significant effect on the conduction through the transistor and cause unexpected operation of the IC. So unless otherwise specified, unused input pins should be connected to the power supply or ground line.

© 2018 ROHM Co., Ltd. All rights reserved.

Operational Notes – continued

10. Regarding the Input Pin of the IC

This IC contains P+ isolation and P substrate layers between adjacent elements in order to keep them isolated. P-N junctions are formed at the intersection of the P layers with the N layers of other elements, creating a parasitic diode or transistor. For example (refer to figure below):

When GND > Pin A and GND > Pin B, the P-N junction operates as a parasitic diode.
When GND > Pin B, the P-N junction operates as a parasitic transistor.

Parasitic diodes inevitably occur in the structure of the IC. The operation of parasitic diodes can result in mutual interference among circuits, operational faults, or physical damage. Therefore, conditions that cause these diodes to operate, such as applying a voltage lower than the GND voltage to an input pin (and thus to the P substrate) should be avoided.

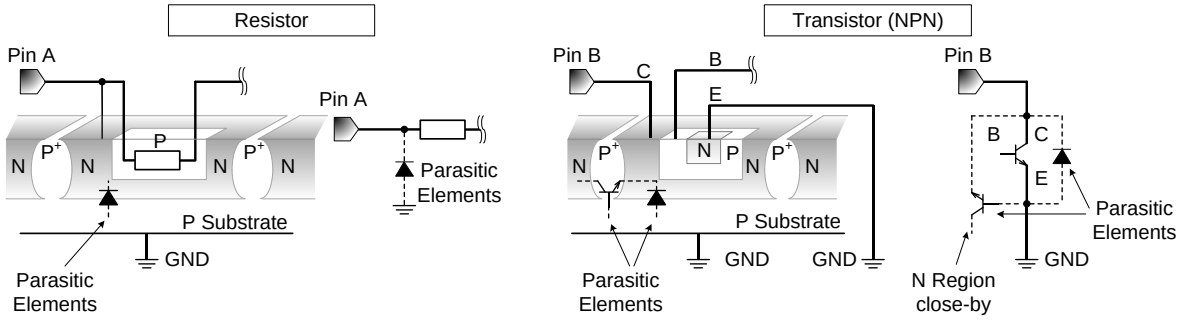

Figure 43. Example of IC Structure

11. Ceramic Capacitor

When using a ceramic capacitor, determine a capacitance value considering the change of capacitance with temperature and the decrease in nominal capacitance due to DC bias and others.

12. Thermal Shutdown Circuit (TSD)

This IC has a built-in thermal shutdown circuit that prevents heat damage to the IC. Normal operation should always be within the IC's maximum junction temperature rating. If however the rating is exceeded for a continued period, the junction temperature (Tj) will rise which will activate the TSD circuit that will turn OFF power output pins. The IC should be powered down and turned ON again to resume normal operation because the TSD circuit keeps the outputs at the OFF state even if the Tj falls below the TSD threshold.
Note that the TSD circuit operates in a situation that exceeds the absolute maximum ratings and therefore, under no circumstances, should the TSD circuit be used in a set design or for any purpose other than protecting the IC from heat damage.

13. Over Current Protection Circuit (OCP)

This IC incorporates an integrated overcurrent protection circuit that is activated when the load is shorted. This protection circuit is effective in preventing damage due to sudden and unexpected incidents. However, the IC should not be used in applications characterized by continuous operation or transitioning of the protection circuit.

© 2018 ROHM Co., Ltd. All rights reserved.

Ordering Information

B M 2 S C Q 1 2 x T - L B Z

(FB OLP)	(VCC OVP)
1: Auto Restart	Latch
2: Latch	Latch
3: Auto Restart	Auto Restart
4: Latch	Auto Restart

Package
T: TO220-6M

Product Rank
LB: Industrial applications

Lineup

Product name	FB OLP	VCC OVP
BM2SCQ121T-LBZ	Auto Restart	Latch
BM2SCQ122T-LBZ	Latch	Latch
BM2SCQ123T-LBZ	Auto Restart	Auto Restart
BM2SCQ124T-LBZ	Latch	Auto Restart

Marking Diagram

TO220-6M (TOP VIEW)

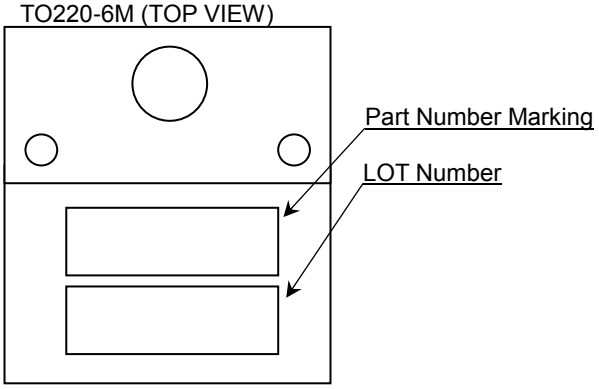

Product name	Part Number Marking
BM2SCQ121T-LBZ	M2SCQ121
BM2SCQ122T-LBZ	M2SCQ122
BM2SCQ123T-LBZ	M2SCQ123
BM2SCQ124T-LBZ	M2SCQ124

© 2018 ROHM Co., Ltd. All rights reserved.

Physical Dimension and Packing Information

Package Name	TO220-6M

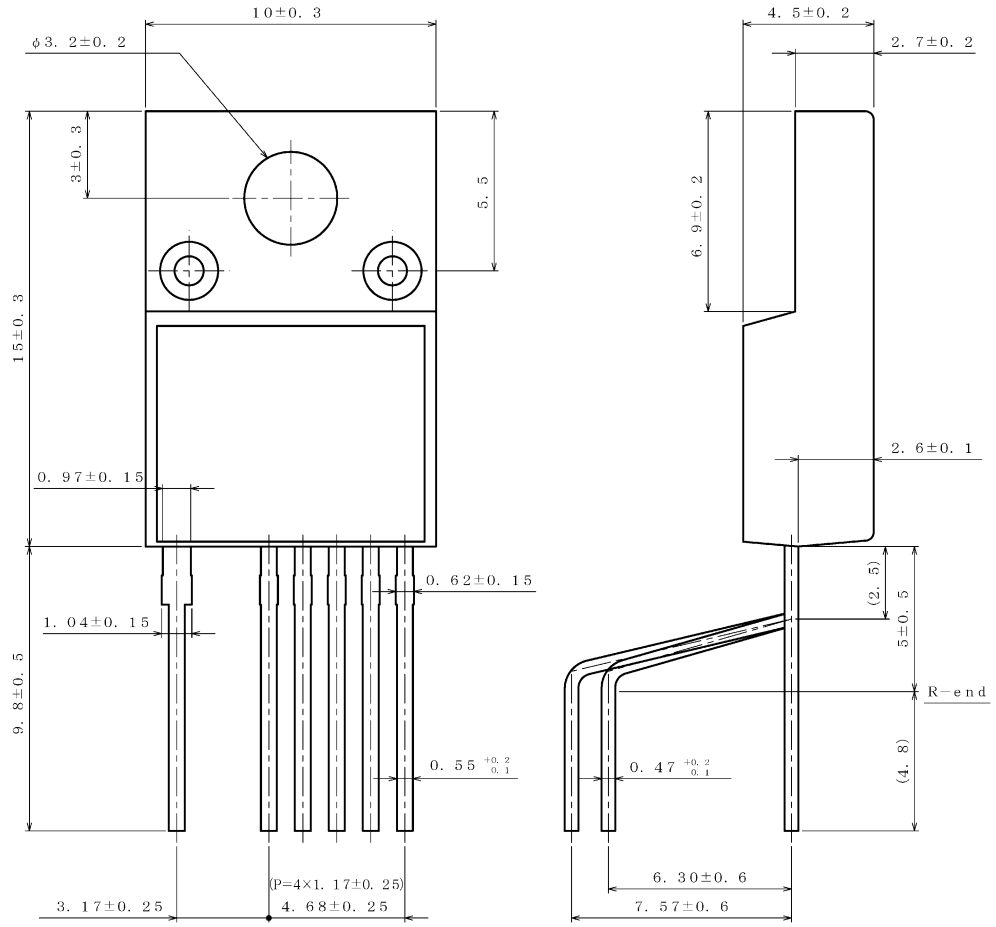

< Container Information >

Container	Tube
Quantity	238pcs
Direction of feed	Direction of products is fixed in a container tube

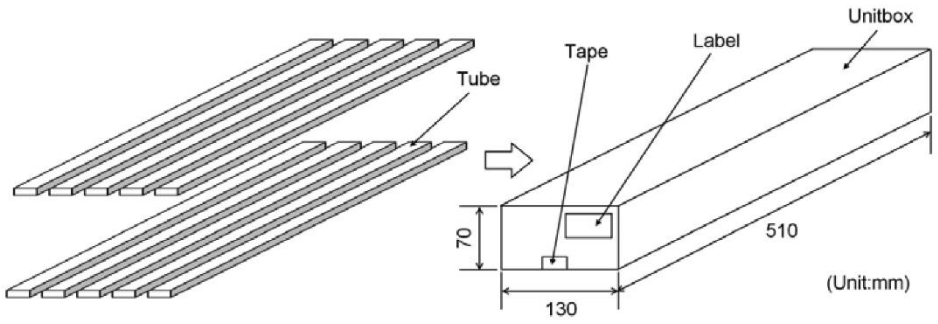

© 2018 ROHM Co., Ltd. All rights reserved.

Revision History

Date	Revision	Changes
09.Jan.2019	001	New Release
03.Apr.2019	002	Add the division of product name
03.Dec.2019	003	P1 Features: Modify the internal MOSFET's on resistance. P1 Features: Modify the notation of VCC UVLO. P3 Modify the Block Diagram. P7 Modify the Block Diagram. P9 Modify the Block Diagram. P12 Modify the points D and F of Figure 10.

© 2018 ROHM Co., Ltd. All rights reserved.

Notice

Precaution on using ROHM Products

1. If you intend to use our Products in devices requiring extremely high reliability (such as medical equipment (Note 1), aircraft/spacecraft, nuclear power controllers, etc.) and whose malfunction or failure may cause loss of human life, bodily injury or serious damage to property ("Specific Applications"), please consult with the ROHM sales representative in advance. Unless otherwise agreed in writing by ROHM in advance, ROHM shall not be in any way responsible or liable for any damages, expenses or losses incurred by you or third parties arising from the use of any ROHM's Products for Specific Applications.

(Note1) Medical Equipment Classification of the Specific Applications

JAPAN	USA	EU	CHINA
CLASSⅢ	CLASSⅢ	CLASSⅡb	CLASSⅢ
CLASSⅣ		CLASSⅢ	

2. ROHM designs and manufactures its Products subject to strict quality control system. However, semiconductor products can fail or malfunction at a certain rate. Please be sure to implement, at your own responsibilities, adequate safety measures including but not limited to fail-safe design against the physical injury, damage to any property, which a failure or malfunction of our Products may cause. The following are examples of safety measures:
   [a] Installation of protection circuits or other protective devices to improve system safety
   [b] Installation of redundant circuits to reduce the impact of single or multiple circuit failure

3. Our Products are not designed under any special or extraordinary environments or conditions, as exemplified below. Accordingly, ROHM shall not be in any way responsible or liable for any damages, expenses or losses arising from the use of any ROHM's Products under any special or extraordinary environments or conditions. If you intend to use our Products under any special or extraordinary environments or conditions (as exemplified below), your independent verification and confirmation of product performance, reliability, etc, prior to use, must be necessary:
   [a] Use of our Products in any types of liquid, including water, oils, chemicals, and organic solvents
   [b] Use of our Products outdoors or in places where the Products are exposed to direct sunlight or dust
   [c] Use of our Products in places where the Products are exposed to sea wind or corrosive gases, including Cl_2, H_2S, NH_3, SO_2, and NO_2
   [d] Use of our Products in places where the Products are exposed to static electricity or electromagnetic waves
   [e] Use of our Products in proximity to heat-producing components, plastic cords, or other flammable items
   [f] Sealing or coating our Products with resin or other coating materials
   [g] Use of our Products without cleaning residue of flux (Exclude cases where no-clean type fluxes is used. However, recommend sufficiently about the residue.); or Washing our Products by using water or water-soluble cleaning agents for cleaning residue after soldering
   [h] Use of the Products in places subject to dew condensation

4. The Products are not subject to radiation-proof design.

5. Please verify and confirm characteristics of the final or mounted products in using the Products.

6. In particular, if a transient load (a large amount of load applied in a short period of time, such as pulse, is applied, confirmation of performance characteristics after on-board mounting is strongly recommended. Avoid applying power exceeding normal rated power; exceeding the power rating under steady-state loading condition may negatively affect product performance and reliability.

7. De-rate Power Dissipation depending on ambient temperature. When used in sealed area, confirm that it is the use in the range that does not exceed the maximum junction temperature.

8. Confirm that operation temperature is within the specified range described in the product specification.

9. ROHM shall not be in any way responsible or liable for failure induced under deviant condition from what is defined in this document.

Precaution for Mounting / Circuit board design

1. When a highly active halogenous (chlorine, bromine, etc.) flux is used, the residue of flux may negatively affect product performance and reliability.

2. In principle, the reflow soldering method must be used on a surface-mount products, the flow soldering method must be used on a through hole mount products. If the flow soldering method is preferred on a surface-mount products, please consult with the ROHM representative in advance.

For details, please refer to ROHM Mounting specification

© 2015 ROHM Co., Ltd. All rights reserved.

Precautions Regarding Application Examples and External Circuits

1. If change is made to the constant of an external circuit, please allow a sufficient margin considering variations of the characteristics of the Products and external components, including transient characteristics, as well as static characteristics.

2. You agree that application notes, reference designs, and associated data and information contained in this document are presented only as guidance for Products use. Therefore, in case you use such information, you are solely responsible for it and you must exercise your own independent verification and judgment in the use of such information contained in this document. ROHM shall not be in any way responsible or liable for any damages, expenses or losses incurred by you or third parties arising from the use of such information.

Precaution for Electrostatic

This Product is electrostatic sensitive product, which may be damaged due to electrostatic discharge. Please take proper caution in your manufacturing process and storage so that voltage exceeding the Products maximum rating will not be applied to Products. Please take special care under dry condition (e.g. Grounding of human body / equipment / solder iron, isolation from charged objects, setting of Ionizer, friction prevention and temperature / humidity control).

Precaution for Storage / Transportation

1. Product performance and soldered connections may deteriorate if the Products are stored in the places where:
   - [a] the Products are exposed to sea winds or corrosive gases, including Cl_2, H_2S, NH_3, SO_2, and NO_2
   - [b] the temperature or humidity exceeds those recommended by ROHM
   - [c] the Products are exposed to direct sunshine or condensation
   - [d] the Products are exposed to high Electrostatic

2. Even under ROHM recommended storage condition, solderability of products out of recommended storage time period may be degraded. It is strongly recommended to confirm solderability before using Products of which storage time is exceeding the recommended storage time period.

3. Store / transport cartons in the correct direction, which is indicated on a carton with a symbol. Otherwise bent leads may occur due to excessive stress applied when dropping of a carton.

4. Use Products within the specified time after opening a humidity barrier bag. Baking is required before using Products of which storage time is exceeding the recommended storage time period.

Precaution for Product Label

A two-dimensional barcode printed on ROHM Products label is for ROHM's internal use only.

Precaution for Disposition

When disposing Products please dispose them properly using an authorized industry waste company.

Precaution for Foreign Exchange and Foreign Trade act

Since concerned goods might be fallen under listed items of export control prescribed by Foreign exchange and Foreign trade act, please consult with ROHM in case of export.

Precaution Regarding Intellectual Property Rights

1. All information and data including but not limited to application example contained in this document is for reference only. ROHM does not warrant that foregoing information or data will not infringe any intellectual property rights or any other rights of any third party regarding such information or data.

2. ROHM shall not have any obligations where the claims, actions or demands arising from the combination of the Products with other articles such as components, circuits, systems or external equipment (including software).

3. No license, expressly or implied, is granted hereby under any intellectual property rights or other rights of ROHM or any third parties with respect to the Products or the information contained in this document. Provided, however, that ROHM will not assert its intellectual property rights or other rights against you or your customers to the extent necessary to manufacture or sell products containing the Products, subject to the terms and conditions herein.

Other Precaution

1. This document may not be reprinted or reproduced, in whole or in part, without prior written consent of ROHM.

2. The Products may not be disassembled, converted, modified, reproduced or otherwise changed without prior written consent of ROHM.

3. In no event shall you use in any way whatsoever the Products and the related technical information contained in the Products or this document for any military purposes, including but not limited to, the development of mass-destruction weapons.

4. The proper names of companies or products described in this document are trademarks or registered trademarks of ROHM, its affiliated companies or third parties.

© 2015 ROHM Co., Ltd. All rights reserved.

General Precaution

1. Before you use our Products, you are requested to carefully read this document and fully understand its contents. ROHM shall not be in any way responsible or liable for failure, malfunction or accident arising from the use of any ROHM's Products against warning, caution or note contained in this document.

2. All information contained in this document is current as of the issuing date and subject to change without any prior notice. Before purchasing or using ROHM's Products, please confirm the latest information with a ROHM sales representative.

3. The information contained in this document is provided on an "as is" basis and ROHM does not warrant that all information contained in this document is accurate and/or error-free. ROHM shall not be in any way responsible or liable for any damages, expenses or losses incurred by you or third parties resulting from inaccuracy or errors of or concerning such information.

© 2015 ROHM Co., Ltd. All rights reserved.

Mouser Electronics

Authorized Distributor

Click to View Pricing, Inventory, Delivery & Lifecycle Information:

ROHM Semiconductor:

BM2SCQ121T-LBZ BM2SCQ122T-LBZ BM2SCQ123T-LBZ BM2SCQ124T-LBZ