MP3802

240Vpp High Voltage EL Lamp Driver

The Future of Analog IC Technology

DESCRIPTION

The MP3802 is a high output voltage, DC to AC converter designed for driving Electroluminescent (EL) lamps of up to 5 square inches. The device operates from an input voltage range of 2.5V to 5.5V, making it suitable for 1-cell Li-Ion and 2 or 3-cell alkaline/NiCad/NiMH battery applications. The device uses a single inductor and a minimum number of passive components. The MP3802 converts a low-voltage DC input to a ±120V regulated output voltage that drives the EL lamp.

The MP3802 is comprised of two stages: a boost stage and a H-bridge lamp driver stage. The boost stage converts the input voltage up to 120V. The H-bridge stage alternately switches the 120V to each terminal of the EL lamp.

The MP3802 has two separate internal oscillators for the boost and H-bridge stages. The frequency of each oscillator is set independently via external resistors. This flexibility allows the EL lamp circuit to be optimized for maximum performance. Also, the IC can be enabled /disabled by connecting these two resistors to V_{DD}/GND.

The MP3802 is available in an 8-pin MSOP package.

FEATURES

- 2.5V to 5.5V DC Input Voltage
- 240V_{PP} Regulated AC Output Waveform
- Single Cell Lithium-Ion Compatible
- 10nA Shutdown Current
- Adjustable EL Lamp Frequency
- Adjustable Converter Frequency
- Available in MSOP-8
- Split Supply Capability

APPLICATIONS

- Portable Multimedia Players
- LCD Backlighting
- PDAs
- Handheld Wireless Communication
- Mobile Phones
- Remote Controls
- Global Positioning Systems (GPS)

"MPS" and "The Future of Analog IC Technology" are Registered Trademarks of Monolithic Power Systems, Inc.

TYPICAL APPLICATION

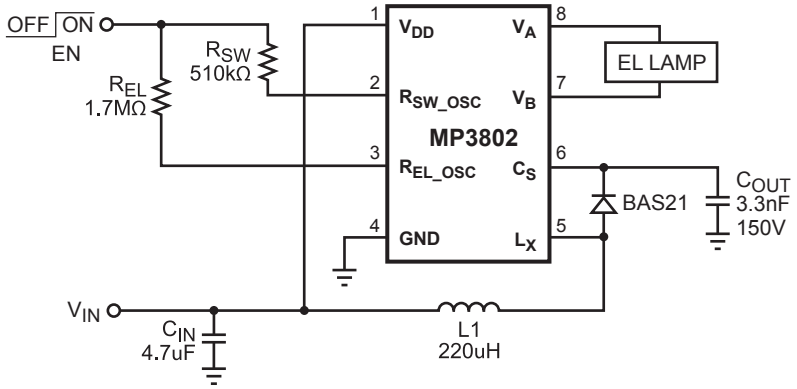

MPS Proprietary Information. Unauthorized Photocopy and Duplication Prohibited.
© 2013 MPS. All Rights Reserved.

PACKAGE REFERENCE

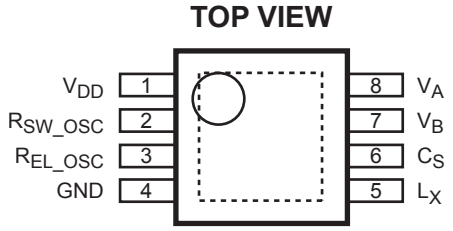

Part Number*	Package	Temperature
MP3802DH	MSOP8	–40°C to +85°C

* For Tape & Reel, add suffix –Z (eg. MP3802DH–Z)
For RoHS Compliant Packaging, add suffix –LF
(eg. MP3802DH–LF–Z)

ABSOLUTE MAXIMUM RATINGS (1)

Supply Voltage (V_{DD}) ..... –0.5V to +6.0V
Output Voltage (V_{CS}, V_A, V_B) ..... –0.5V to +125V
All Other Pins ..... –0.5V to V_{DD} + 0.3V
Junction Temperature ..... 150°C
Lead Temperature ..... 260°C
Storage Temperature ..... –65°C to +150°C

Recommended Operating Conditions (2)

Supply Voltage ..... 2.5V to 5.5V
Lamp Drive Frequency (f_{EL}) ..... 60Hz to 1KHz
Switching Transistor Freq ..... 50KHz to 200KHz
Operating Temperature ..... –40°C to +85°C

Thermal Resistance (3)

	θ_{JA}	θ_{JC}	
MSOP8	150	65	°C/W

Notes:
1) Exceeding these ratings may damage the device.
2) The device is not guaranteed to function outside of its operating conditions.
3) Measured on approximately 1" square of 1 oz copper.

ELECTRICAL CHARACTERISTICS

V_{IN} = V_{DD} = 3.0V, R_{EL}=1.7MΩ, R_{SW}=510KΩ, T_A = +25°C, unless otherwise noted.

Parameter	Symbol	Condition	Min	Typ	Max	Units
On Resistance of Switching Transistor	$R_{DS(ON)}$	I_{SW} = 100mA, V_{CS} = 120V		9		Ω
Output Voltage Regulation	V_{CS}			120		V
Peak to Peak Output Voltage	$V_A – V_B$			240		V
Input Low Voltage (Turn Off)	V_{EN-L}			V_{DD} – 0.6		V
Input High Voltage (Turn On)	V_{EN-H}			V_{DD} – 0.3		V
Shutdown Current	I_{SD}	V_{EN} = 0V		10		nA
Input Supply Current	I_{VDD}	V_A, V_B Open, V_{EN} = V_{IN}		100		μA
Input Current Including Inductor Current	I_{IN}	A 2kΩ resistor is series with a 10nF capacitor connected between V_A and V_B		22.5		mA
EL Lamp Frequency	f_{EL}		200	250	300	Hz
Switching Transistor Frequency	f_{SW}			84		KHz
Switching Transistor Duty Cycle	D			91		%

Note:
4) Shutdown current is defined as the sum of currents going into V_{DD}, V_{CS}, and SW nodes.

MPS Proprietary Information. Unauthorized Photocopy and Duplication Prohibited.
© 2013 MPS. All Rights Reserved.

PIN FUNCTIONS

Pin #	Name	Description
1	V_{DD}	Supply Voltage.
2	R_{SW_OSC}	Boost Converter Frequency Setting Pin. Refer the frequency setting curve in the typical performance characteristics.
3	R_{EL_OSC}	EL Driver Frequency Setting Pin. Roughly, $f_{EL}=\frac{1.7M\Omega \times 240Hz}{R_{EL}}$
4	GND	Ground. Connect the exposed pad to this pin.
5	L_X	Boost Converter Switching Pin. This pin connects to the N-Channel MOSFET drain.
6	C_S	Boost Converter Output. Put a 150V, NPO ceramic capacitor at this pin to stone the energy transferred from the inductor.
7	V_B	Output Voltage B on EL Device.
8	V_A	Output Voltage A on EL Device.

MPS Proprietary Information. Unauthorized Photocopy and Duplication Prohibited.
© 2013 MPS. All Rights Reserved.

BLOCK DIAGRAM

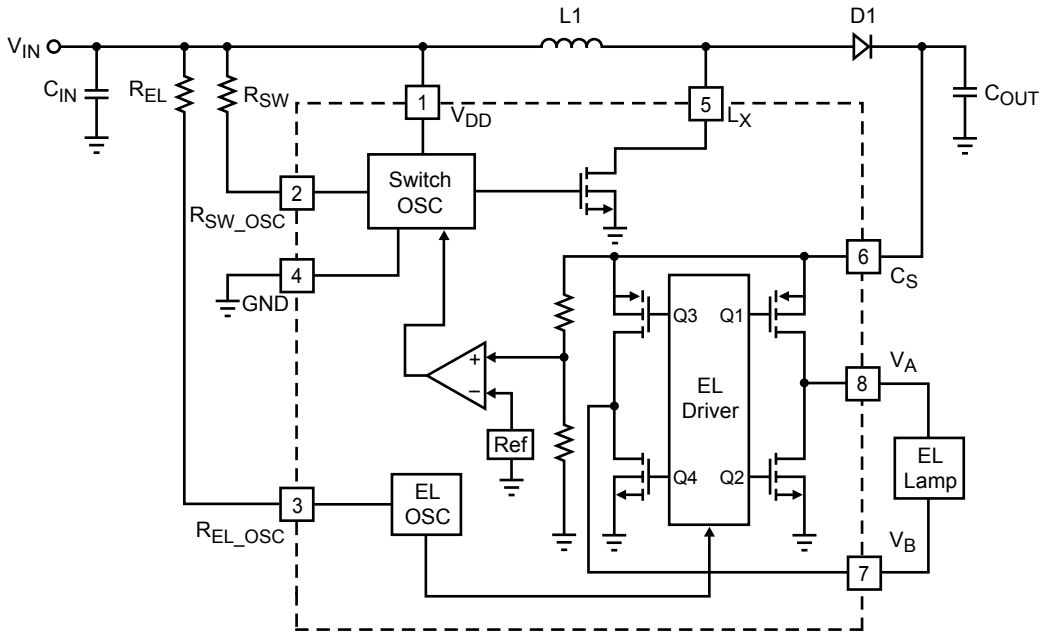

Figure 1—Functional Block Diagram

MPS Proprietary Information. Unauthorized Photocopy and Duplication Prohibited.
© 2013 MPS. All Rights Reserved.

PACKAGE INFORMATION

MSOP8

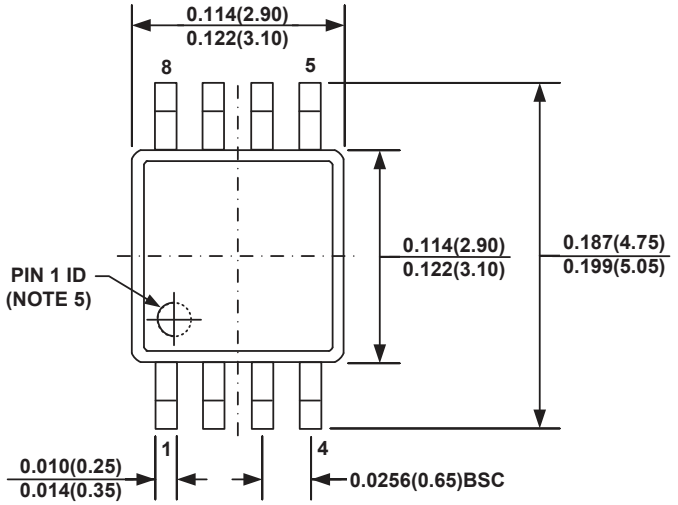

TOP VIEW

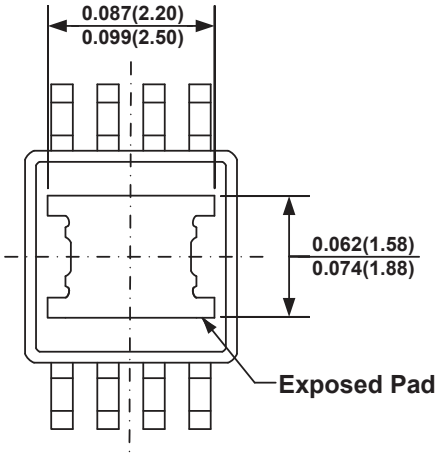

BOTTOM VIEW

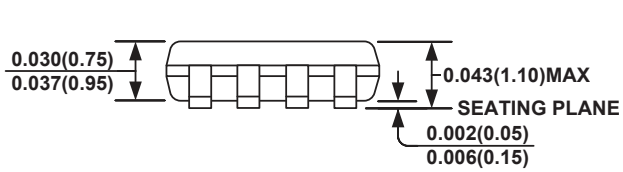

FRONT VIEW

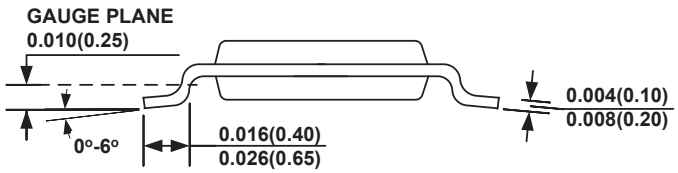

SIDE VIEW

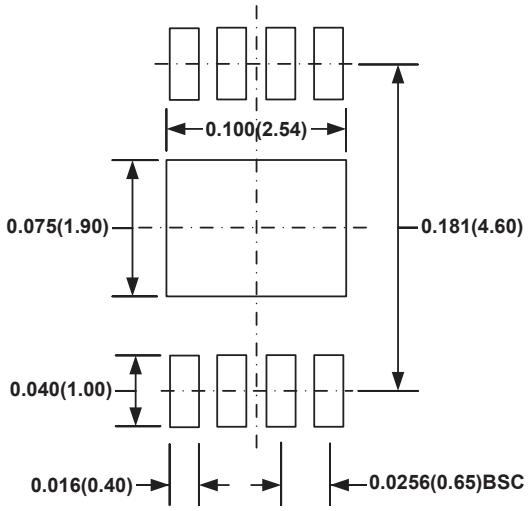

RECOMMENDED LAND PATTERN

NOTE:

1) CONTROL DIMENSION IS IN INCHES. DIMENSION IN BRACKET IS IN MILLIMETERS.
2) PACKAGE LENGTH DOES NOT INCLUDE MOLD FLASH, PROTRUSION OR GATE BURR.
3) PACKAGE WIDTH DOES NOT INCLUDE INTERLEAD FLASH OR PROTRUSION.
4) LEAD COPLANARITY (BOTTOM OF LEADS AFTER FORMING) SHALL BE 0.004" INCHES MAX.
5) PIN 1 IDENTIFICATION HAS HALF OR FULL CIRCLE OPTION.
6) DRAWING MEETS JEDEC MO-187, VARIATION AA-T.
7) DRAWING IS NOT TO SCALE.

NOTICE: The information in this document is subject to change without notice. Please contact MPS for current specifications. Users should warrant and guarantee that third party Intellectual Property rights are not infringed upon when integrating MPS products into any application. MPS will not assume any legal responsibility for any said applications.

MPS Proprietary Information. Unauthorized Photocopy and Duplication Prohibited.
© 2013 MPS. All Rights Reserved.