CKT SIZE	DIM A	DIM B	DIM C	DIM D
2	.165 (4.20)	.378 (9.60)	.520 (13.20)	.772 (19.60)
4	.496 (12.60)	.709 (18.00)	.850 (21.60)	1.102 (28.00)
5	.661 (16.80)	.874 (22.20)	.1.016 (25.80)	1.268 (32.20)
6	.827 (21.00)	1.039 (26.40)	1.181 (30.00)	1.433 (36.40)
7	.992 (25.20)	1.205 (30.60)	1.346 (34.20)	1.598 (40.60)
8	1.157 (29.40)	1.370 (34.80)	1.512 (38.40)	1.764 (44.80)
9	1.323 (33.60)	1.535 (39.00)	1.677 (42.60)	1.929 (49.00)
10	1.488 (37.80)	1.701 (43.20)	1.843 (46.80)	2.094 (53.20)
11	1.654 (42.00)	1.866 (47.40)	2.008 (51.00)	2.260 (57.40)
12	1.819 (46.20)	2.031 (51.60)	2.173 (55.20)	2.425 (61.60)

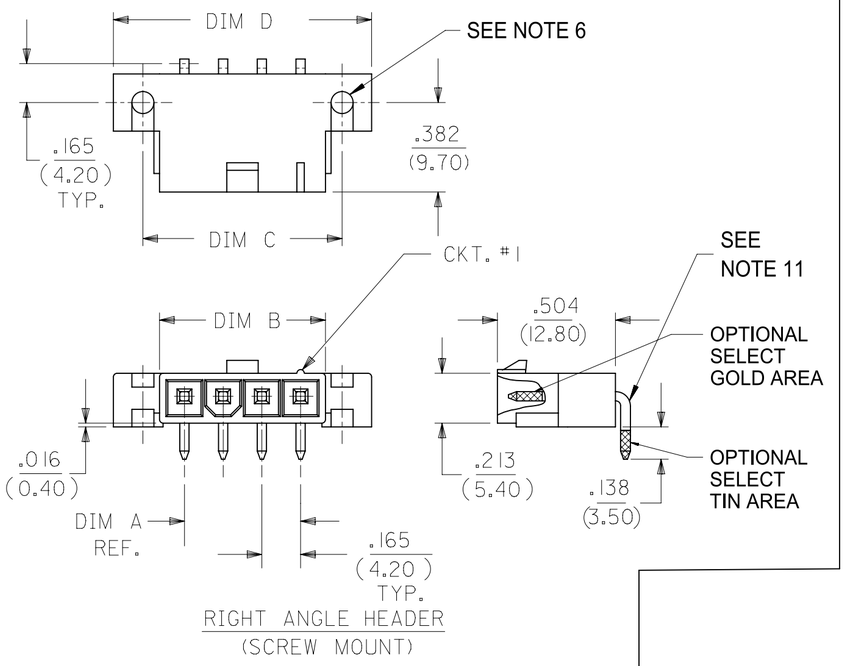

RIGHT ANGLE HEADER
(SCREW MOUNT)

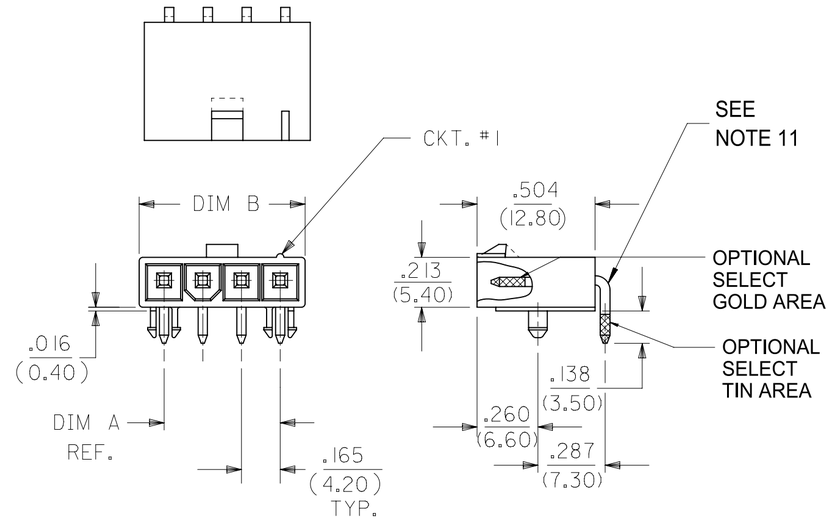

RIGHT ANGLE HEADER
(PEG MOUNT)

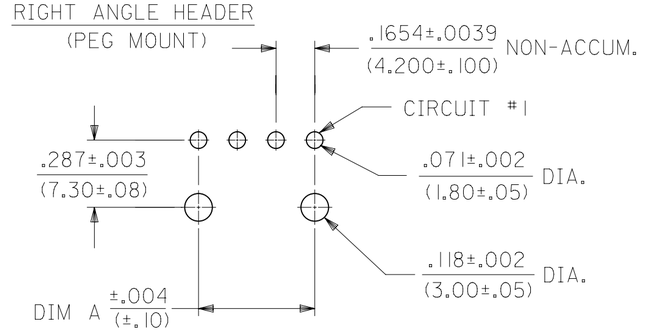

RECOMMENDED HOLE LAYOUT FOR
.070/(1.78) MAX. THICK P.C. BOARD
VIEWED FROM COMPONENT SIDE
4-12 CIRCUIT PART

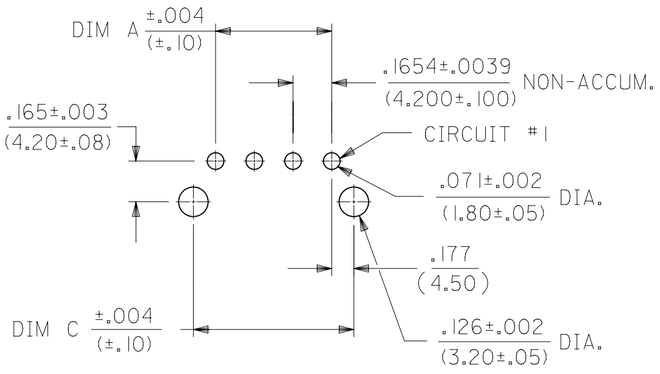

RECOMMENDED HOLE LAYOUT FOR
.070/(1.78) MAX. THICK P.C. BOARD
VIEWED FROM COMPONENT SIDE

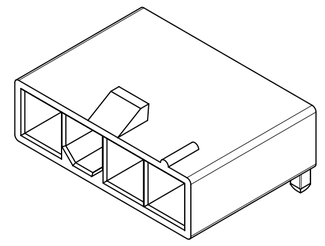

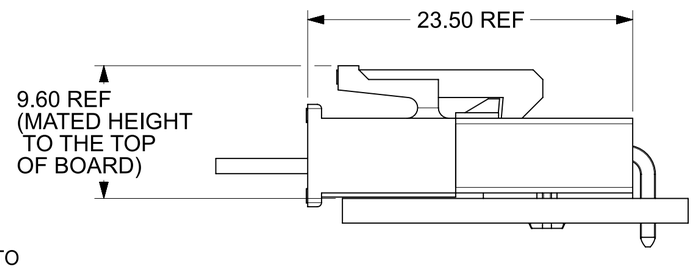

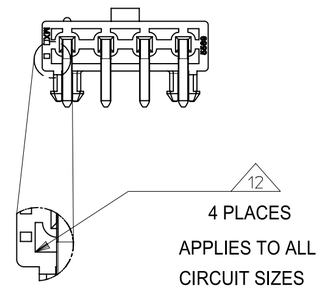

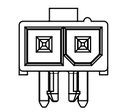

2 CIRCUIT

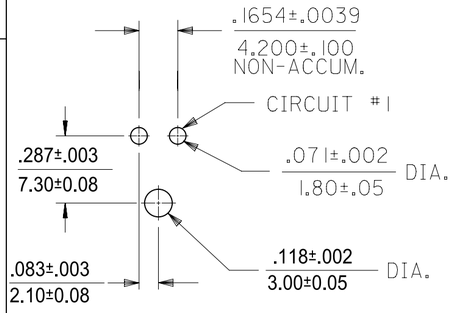

RECOMMENDED HOLE LAYOUT FOR
.070/ 1.78 MAX. THICK P.C. BOARD
VIEWED FROM COMPONENT SIDE
2 CIRCUIT PART

NOTES:

1) HOUSING MATERIAL:
"BLANK" = NYLON 6/6, U.L. 94V-2, COLOR: NATURAL.
210 = NYLON 6/6, U.L. 94V-0, COLOR: NATURAL.
BL = NYLON 6/6, U.L. 94V-2, COLOR: BLACK.
400 = NYLON 6/6, U.L. 94V-O. COLOR: BLACK.
TERMINAL MATERIAL: BRASS, ALLOY.

2) TERMINAL PLATING:
G, GS - .000030/(.00076) MIN. SELECT GOLD AND .000100/(.00127) MIN. SELECT MATTE TIN OVER .000050/(.00127) MIN NICKEL OVERALL.

G2, GS2 - .00015/(.00038) MIN. SELECT GOLD AND .000100/(.00254) MIN. SELECT MATTE TIN OVER .000050/(.00127) MIN. NICKEL OVERALL.

RM - .000060/(.00152) MIN REFLOWED MATTE TIN OVER .000050/(.00127) MIN. NICKEL OVERALL.

BLANK, S, MS - .000100/(.00254)MIN. MATTE TIN OVER .000050/(.00127) MIN. NICKEL OVERALL.

3) PRODUCT SPECIFICATION: PS-5556-001

4) PACKAGING SPECIFICATION : BULK PACK PER PK-5569-002
TRAY PACK PER PK-5569-005

5) PART MATES WITH MOLEX RECEPTACLE #5557,46994 AND 200453.

6) PART IS DESIGNED FOR USE WITH #4 OR M3 SELF TAPPING SCREWS.

7) DISCOLORATION IN THE BANDOLIER CARRIER AREA OF THE PIN IS INHERENT TO THE PLATING PROCESS AND IS DUE TO THE MASKING EFFECT OF THE CARRIER. THIS DISCOLORATION IS IN A NON-FUNCTIONAL AREA OF THE PIN AND WILL NOT AFFECT THE PERFORMANCE OF THE HEADER ASSEMBLY.

8) CONNECTORS ARE NOT TO BE MATED OR UNMATED WHILE CIRCUIT ARE LIVE.

9) PARTS NOT DESIGNED FOR CURRENT SHARING.

10) PART CONFORMS TO CLASS "B" REQUIREMENTS OF COSMETIC SPECIFICATION PS-45499-002.

11) FORMING MARKS ON PINS ARE ACCEPTABLE

12 CORNER CORE-OUTS ARE OPTIONAL AND MAY OR MAY NOT BE PRESENT.

13) TEXT ON PART IS FOR REFERENCE ONLY. TEXT AND TEXT LOCATION MAY VARY DEPENDING ON PART NUMBER AND/OR TOOL.

LEGEND:

5569 - ** A * * - *

- CKT. SIZE (02-12)
- ASSEMBLY
- MOUNTING & LOCK OPTION:
  - 3 = SCREW MOUNT, POSITIVE LOCK
  - 4 = PEG MOUNT, POSITIVE LOCK
  - 5 = PEG MOUNT, PASSIVE LOCK
- PLATING OPTION: (SEE NOTE 2)
- MATERIAL OPTION: (SEE NOTE 1)

THIS DRAWING REPLACES DRAWING SDA-5569-NL*

THIS DRAWING CONTAINS INFORMATION THAT IS PROPRIETARY TO MOLEX ELECTRONIC TECHNOLOGIES, LLC AND SHOULD NOT BE USED WITHOUT WRITTEN PERMISSION

DIMENSION UNITS	SCALE
IN/MM	NTS

GENERAL TOLERANCES (UNLESS SPECIFIED)

	MM	INCH
4 PLACES	±	±
3 PLACES	±	± 0.0150
2 PLACES	± 0.380	±
1 PLACE	±	±
0 PLACES	±	±
ANGULAR TOL	± 3°	

DRAFT WHERE APPLICABLE MUST REMAIN WITHIN DIMENSIONS

CURRENT REV DESC: ADD THE VIEW OF MATING HEIGHT

STATUS: Production
DRWN: Xiao Wei Wang 2026-06-25
CHK'D: Xiao Wei Wang 2026-06-29
APPR: Xue Qing Zhang 2026-06-29

INITIAL REVISION:
DRWN: KSS 2089-02-14
APPR: RAS 2089-02-14

THIRD ANGLE PROJECTION | DRAWING: C-SIZE | SERIES: 5569

molex

RIGHT ANGLE HEADER ASSY
(SINGLE ROW) (MINI-FIT JR. SERIES)

PRODUCT CUSTOMER DRAWING

DOCUMENT NUMBER	DOC TYPE	DOC PART	REVISION
55690004-SD	PSD	000	B1

MATERIAL NUMBER	CUSTOMER	SHEET NUMBER
SEE CHARTS	GENERAL MARKET	1 OF 2

FORMAT: EngAlign-TC4b+prod-C
REVISION: B
DATE: 2023/10/23

UL94V-2

E.D.P. NO.	ENG. NO.	CKT. SIZE	MOUNTING OPTION	LOCK OPTION	PLATING (SEE NOTE 2)	MAT'L. (SEE NOTE 1)	PACKAGING OPTION
				SCREW MOUNT POSITIVE LOCK			
39-30-3053	5569-05A3GS	5	SCREWS	POSITIVE	30 GOLD	94V-2	BULK
				PEG MOUNT POSITIVE LOCK			
39-30-3045	5569-04A4	4	PEGS	POSITIVE	TIN/NICKEL	94V-2	BULK
39-30-3055	5569-05A4	5	PEGS	POSITIVE	TIN/NICKEL	94V-2	BULK
46999-0709	5569-02A4G	2	PEGS	POSITIVE	30 GOLD	94V-2	TRAY
39-30-3047	5569-04A4G	4	PEGS	POSITIVE	30 GOLD	94V-2	BULK
39-30-3057	5569-05A4G	5	PEGS	POSITIVE	30 GOLD	94V-2	BULK
46999-0710	5569-06A4G	6	PEGS	POSITIVE	30 GOLD	94V-2	TRAY
46999-0713	5569-02A4MS	2	PEGS	POSITIVE	TIN/NICKEL	94V-2	TRAY
46999-0100	5569-05A4MS	5	PEGS	POSITIVE	TIN/NICKEL	94V-2	BULK
46999-0714	5569-06A4MS	6	PEGS	POSITIVE	TIN/NICKEL	94V-2	TRAY
46999-0098	5569-05A4RM	5	PEGS	POSITIVE	REFLOW/NICKEL	94V-2	BULK
				PEG MOUNT, PASSIVE LOCK			
NO E.D.P.	5569-04A5MS	4	PEGS	PASSIVE	TIN/NICKEL	94V-2	BULK
NO E.D.P.	5569-04A5GS2	4	PEGS	PASSIVE	15 GOLD	94V-2	BULK
15-27-1501	5569-05A5GS2	5	PEGS	PASSIVE	15 GOLD	94V-2	BULK

UL94V-0

E.D.P. NO.	ENG. NO.	CKT. SIZE	MOUNTING OPTION	LOCK OPTION	PLATING (SEE NOTE 2)	MAT'L. (SEE NOTE 1)	PACKAGING OPTION
				SCREW MOUNT POSITIVE LOCK			
NO E.D.P.	5569-05A3MS-210	5	SCREW	POSITIVE	TIN/NICKEL	94V-0	BULK
NO E.D.P.	5569-04A3GS-210	4	SCREW	POSITIVE	30 GOLD	94V-0	BULK
NO E.D.P.	5569-05A3GS-210	5	SCREW	POSITIVE	30 GOLD	94V-0	BULK
				PEG MOUNT POSITIVE LOCK			
46999-0703	5569-02A4MS-210	2	PEGS	POSITIVE	TIN/NICKEL	94V-0	TRAY
39-30-3046	5569-04A4MS-210	4	PEGS	POSITIVE	TIN/NICKEL	94V-0	BULK
39-30-3056	5569-05A4MS-210	5	PEGS	POSITIVE	TIN/NICKEL	94V-0	BULK
39-30-3054	5569-05A4MS-210-T	5	PEGS	POSITIVE	TIN/NICKEL	94V-0	TRAY
46999-0704	5569-06A4MS-210	6	PEGS	POSITIVE	TIN/NICKEL	94V-0	TRAY
46999-0711	5569-02A4G-210	2	PEGS	POSITIVE	30 GOLD	94V-0	TRAY
39-30-3048	5569-04A4G-210	4	PEGS	POSITIVE	30 GOLD	94V-0	BULK
39-30-3058	5569-05A4G-210	5	PEGS	POSITIVE	30 GOLD	94V-0	BULK
46999-0712	5569-06A4G-210	6	PEGS	POSITIVE	30 GOLD	94V-0	TRAY
46999-0432	5569-04A4GS-400	4	PEGS	POSITIVE	30 GOLD	94V-0	BULK
50-30-4436	5569-05A4GS-400	5	PEGS	POSITIVE	30 GOLD	94V-0	BULK
46999-0707	5569-02A4MS-400	2	PEGS	POSITIVE	TIN/NICKEL	94V-0	TRAY
46999-0288	5569-04A4MS-400	4	PEGS	POSITIVE	TIN/NICKEL	94V-0	BULK
46999-0289	5569-05A4MS-400	5	PEGS	POSITIVE	TIN/NICKEL	94V-0	BULK
46999-0708	5569-06A4MS-400	6	PEGS	POSITIVE	TIN/NICKEL	94V-0	TRAY

THIS DRAWING CONTAINS INFORMATION THAT IS PROPRIETARY TO MOLEX ELECTRONIC TECHNOLOGIES, LLC AND SHOULD NOT BE USED WITHOUT WRITTEN PERMISSION

DIMENSION UNITS	SCALE
IN/MM	NTS

GENERAL TOLERANCES (UNLESS SPECIFIED)

	MM	INCH
4 PLACES	±	±
3 PLACES	±	± 0.0150
2 PLACES	± 0.380	±
1 PLACE	±	±
0 PLACES	±	±
ANGULAR TOL	± 3°	

DRAFT WHERE APPLICABLE MUST REMAIN WITHIN DIMENSIONS

CURRENT REV DESC: ADD THE VIEW OF MATING HEIGHT

STATUS: Production
DRWN: Xiao Wei Wang 2026-06-25
CHK'D: Xiao Wei Wang 2026-06-29
APPR: Xue Qing Zhang 2026-06-29

INITIAL REVISION:
DRWN: KSS 2089-02-14
APPR: RAS 2089-02-14

THIRD ANGLE PROJECTION | DRAWING: C-SIZE | SERIES: 5569

molex

RIGHT ANGLE HEADER ASSY (SINGLE ROW) (MINI-FIT JR. SERIES)

PRODUCT CUSTOMER DRAWING

DOCUMENT NUMBER	DOC TYPE	DOC PART	REVISION
55690004-SD	PSD	000	B1

MATERIAL NUMBER	CUSTOMER	SHEET NUMBER
SEE CHARTS	GENERAL MARKET	2 OF 2

FORMAT: EngAngle-TCvb-prod-C
REVISION: F
DATE: 2023/10/23