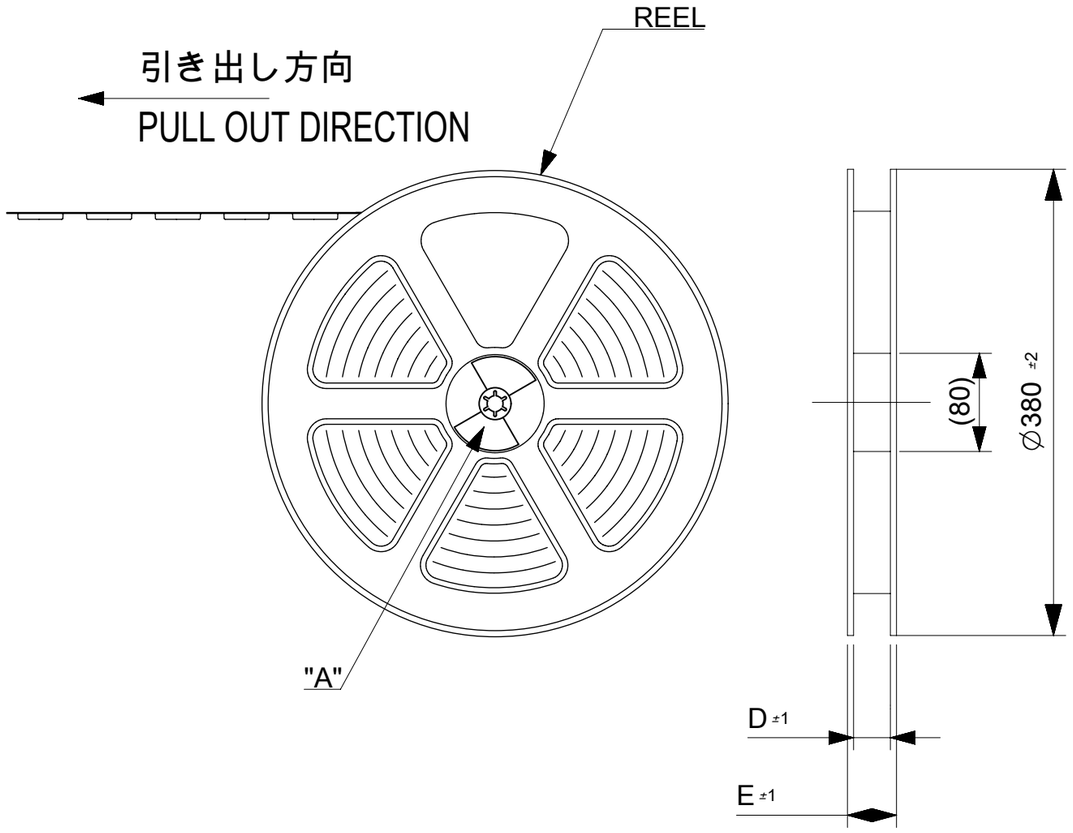

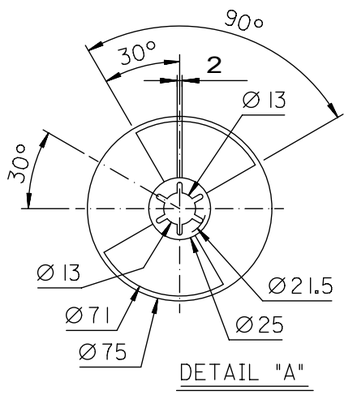

DETAIL "A"
REFERENCE

NOTES

1. 梱包数量： 1500個 / リール
   NUMBER OF CONNECTORS : 1500 PCS/REEL.
2. リードテープ長さ
   LEAD TAPE LENGTH

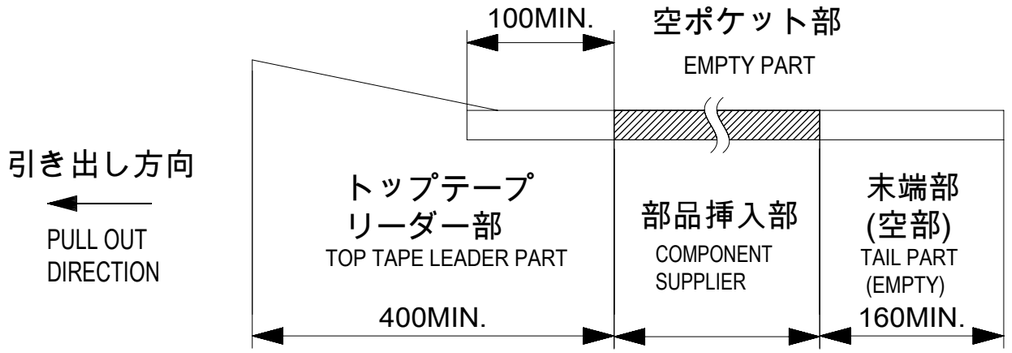

3. カバーテープの剥離強度については、IEC60286-3に準拠。
   TOP TAPE PEEL FORCE IS DEFINED BY IEC 60286-3.
4. 製品詳細寸法については、図面　2004851000を参照下さい。
   FOR DIMENTIONS OF PRODUCT, REFER TO 2004851000
5. 材料　MATERIAL
   キャリアテープ　：　ポリスチレン
   CARRIER TAPE : POLYSTYRENE
   トップテープ　：　ポリエチレンテレフタレート、ポリエチレン
   TOP TAPE : POLYETHYLENE TEREHTHALATE, POLYETHYLENE
   リール　:ポリスチレン＜リサイクル材を含む＞
   REEL: POLYSTYRENE RECYCLED MATERIAL CONTAINED
6. ELV及びRoHS適合品　ELV AND RoHS COMPLIANT.

THIS DRAWING CONTAINS INFORMATION THAT IS PROPRIETARY TO MOLEX ELECTRONIC TECHNOLOGIES, LLC AND SHOULD NOT BE USED WITHOUT WRITTEN PERMISSION

DIMENSION UNITS	SCALE
mm	NTS

GENERAL TOLERANCES (UNLESS SPECIFIED)		
ANGULAR TOL	±	1.0 °
4 PLACES	±	0.1
3 PLACES	±	0.1
2 PLACES	±	0.1
1 PLACE	±	0.1
0 PLACES	±	0.1

DRAFT WHERE APPLICABLE MUST REMAIN WITHIN DIMENSIONS

CURRENT REV DESC:

EC NO: 648126
DRWN: TYAMANE 2020/10/14
CHK'D: YMATSUMOTO 2020/10/30
APPR: SHOSHIKAWA 2020/11/02

INITIAL REVISION:
DRWN: TYAMANE 2018/10/03
APPR: SHOSHIKAWA 2020/06/08

THIRD ANGLE PROJECTION | DRAWING: A3-SIZE | SERIES: 200485

molex

EMB PKG ONE-TOUCH RA HT

PRODUCT CUSTOMER DRAWING

DOCUMENT NUMBER	DOC TYPE	DOC PART	REVISION
2004850000	PSD	000	B

MATERIAL NUMBER	CUSTOMER	SHEET NUMBER
SEE TABLE	GENERAL	1 OF 3

DOCUMENT STATUS	P1	RELEASE DATE	2020/11/02 06:52:12

FORMAT: master-lb-prod-A3
REVISION: J
DATE: 2020/01/14

引き出し方向
PULL OUT
DIRECTION

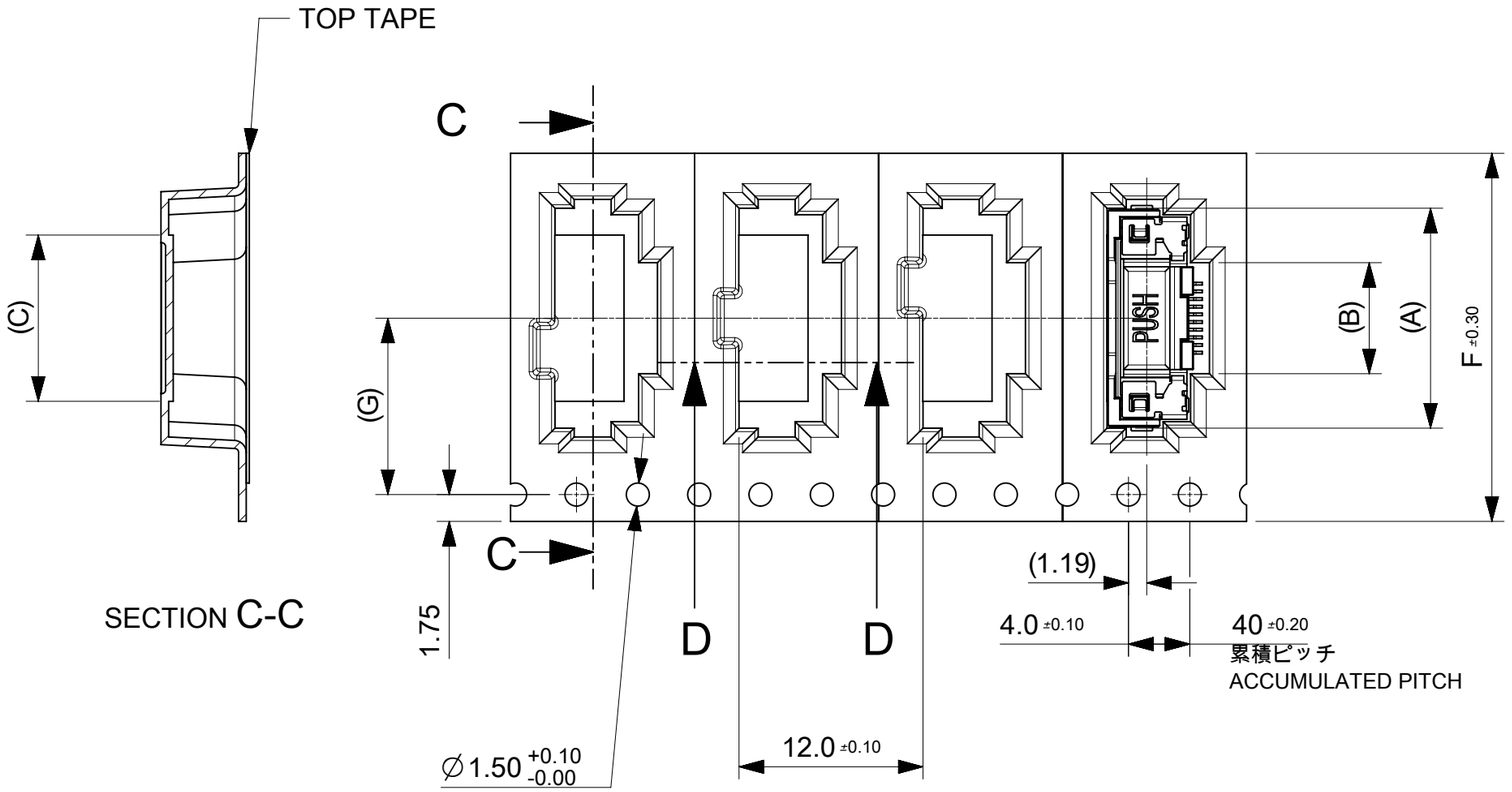

SECTION C-C

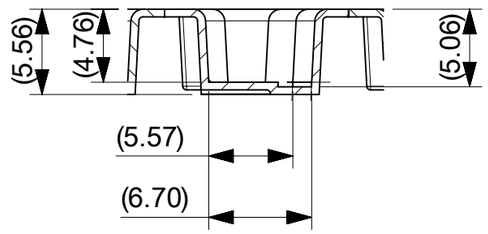

SECTION D-D

11.5	24	29.4	25.4	10.84	7.04	14.34	2004850010	10
G	F	E	D	C	B	A	EMBOSSED PACKAGE オーダー番号　ORDER NO.	Ckt

THIS DRAWING CONTAINS INFORMATION THAT IS PROPRIETARY TO MOLEX ELECTRONIC TECHNOLOGIES, LLC AND SHOULD NOT BE USED WITHOUT WRITTEN PERMISSION

DIMENSION UNITS	SCALE
mm	NTS

GENERAL TOLERANCES (UNLESS SPECIFIED)

ANGULAR TOL	±	1.0 °
4 PLACES	±	0.1
3 PLACES	±	0.1
2 PLACES	±	0.1
1 PLACE	±	0.1
0 PLACES	±	0.1

DRAFT WHERE APPLICABLE MUST REMAIN WITHIN DIMENSIONS

CURRENT REV DESC:

EC NO: 648126
DRWN: TYAMANE 2020/10/14
CHK'D: YMATSUMOTO 2020/10/30
APPR: SHOSHIKAWA 2020/11/02

INITIAL REVISION:
DRWN: TYAMANE 2018/10/03
APPR: SHOSHIKAWA 2020/06/08

THIRD ANGLE PROJECTION | DRAWING: A3-SIZE | SERIES: 200485

molex

EMB PKG ONE-TOUCH RA HT

PRODUCT CUSTOMER DRAWING

DOCUMENT NUMBER	DOC TYPE	DOC PART	REVISION
2004850000	PSD	000	B

MATERIAL NUMBER	CUSTOMER	SHEET NUMBER
SEE TABLE	GENERAL	2 OF 3

CONNECTOR NO. 20048510**

DOCUMENT STATUS	P1	RELEASE DATE	2020/11/02 06:52:12

FORMAT: master-tb-prod-A3
REVISION: J
DATE: 2020/01/14

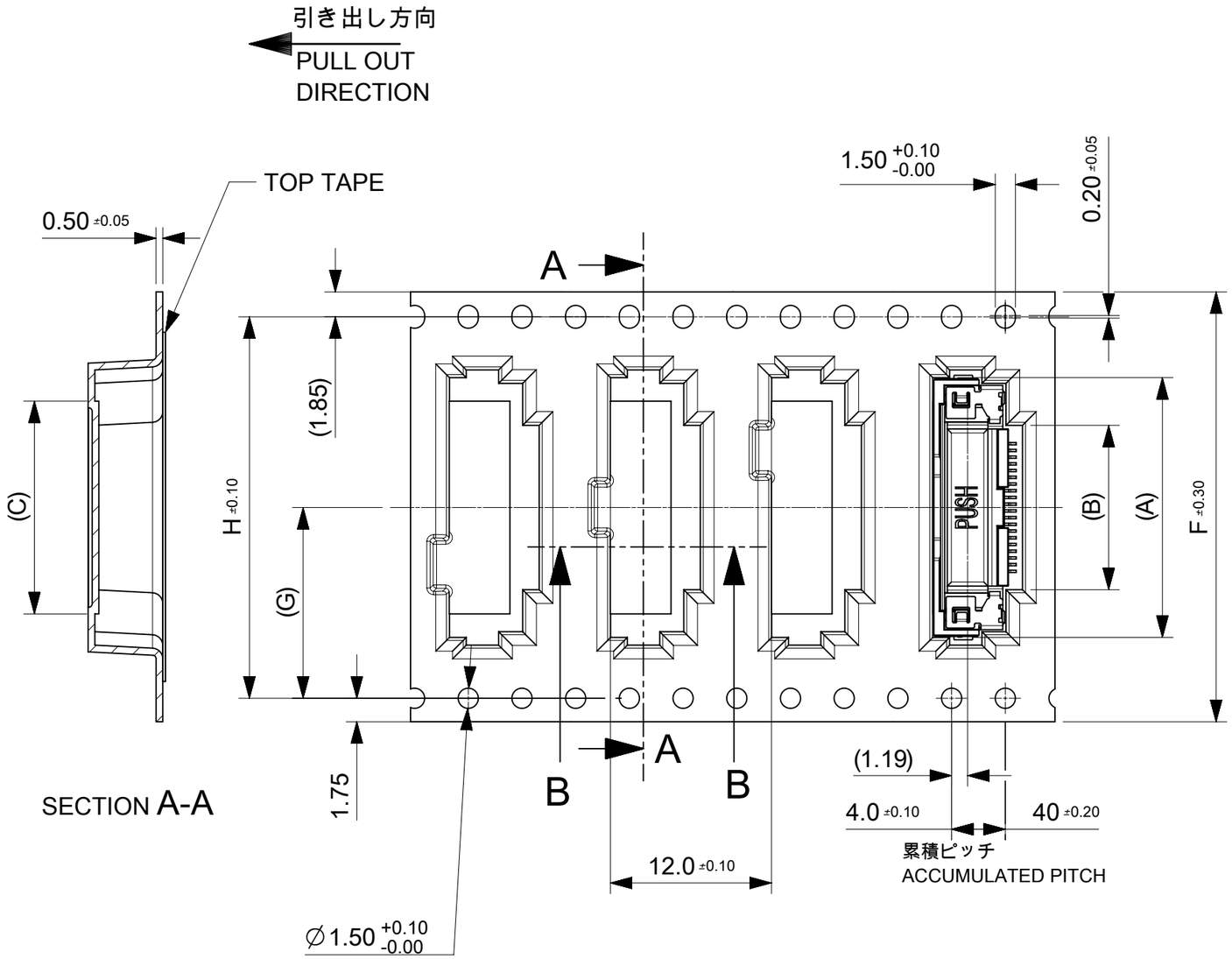

SECTION A-A

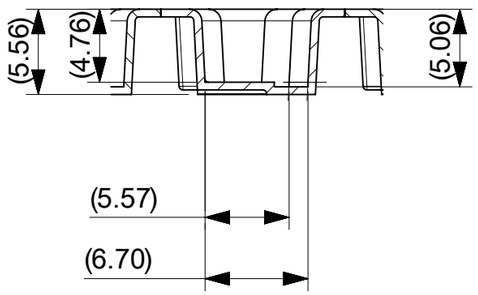

SECTION B-B

68.4	34.2	72	78.1	73.5	45.84	42.04	49.34	2004850080	80
					40.84	37.04	44.34	2004850070	70
52.4	26.2	56	61.4	75.4	35.84	32.04	39.34	2004850060	60
					31.34	27.54	34.84	2004850051	51
					30.84	27.04	34.34	2004850050	50
40.4	20.2	44	49.4	45.4	25.84	22.04	29.34	2004850040	40
					23.34	19.54	26.84	2004850035	35
					20.84	17.04	24.34	2004850030	30
28.4	14.2	32	37.4	33.4	15.84	12.04	19.34	2004850020	20
H	G	F	E	D	C	B	A	EMBOSSED PACKAGE オーダー番号 ORDER NO.	Ckt

THIS DRAWING CONTAINS INFORMATION THAT IS PROPRIETARY TO MOLEX ELECTRONIC TECHNOLOGIES, LLC AND SHOULD NOT BE USED WITHOUT WRITTEN PERMISSION

DIMENSION UNITS	SCALE
mm	NTS

GENERAL TOLERANCES (UNLESS SPECIFIED)

ANGULAR TOL	±	1.0 °
4 PLACES	±	0.1
3 PLACES	±	0.1
2 PLACES	±	0.1
1 PLACE	±	0.1
0 PLACES	±	0.1

DRAFT WHERE APPLICABLE MUST REMAIN WITHIN DIMENSIONS

CURRENT REV DESC:

EC NO: 648126
DRWN: TYAMANE 2020/10/14
CHK'D: YMATSUMOTO 2020/10/30
APPR: SHOSHIKAWA 2020/11/02

INITIAL REVISION:
DRWN: TYAMANE 2018/10/03
APPR: SHOSHIKAWA 2020/06/08

THIRD ANGLE PROJECTION | DRAWING: A3-SIZE | SERIES: 200485

molex

EMB PKG ONE-TOUCH RA HT

PRODUCT CUSTOMER DRAWING

DOCUMENT NUMBER	DOC TYPE	DOC PART	REVISION
2004850000	PSD	000	B

MATERIAL NUMBER	CUSTOMER	SHEET NUMBER
SEE TABLE	GENERAL	3 OF 3

CONNECTOR NO. 20048510**

DOCUMENT STATUS	P1	RELEASE DATE	2020/11/02 06:52:12

FORMAT: master-tb-prod-A3
REVISION: J
DATE: 2020/01/14

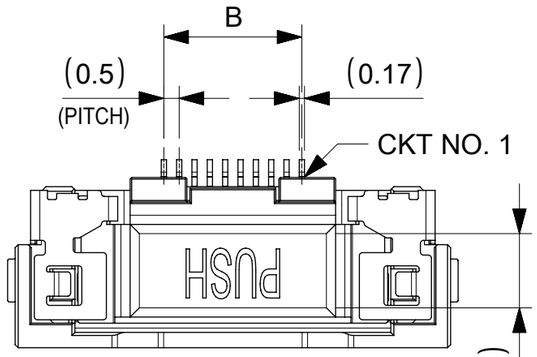

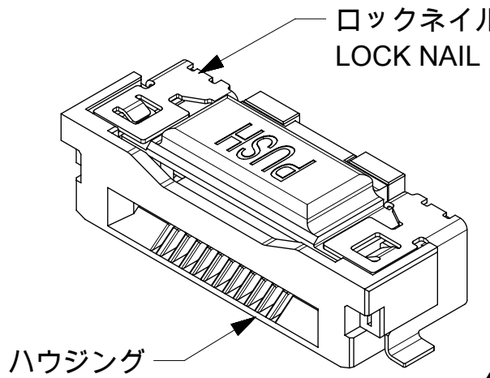

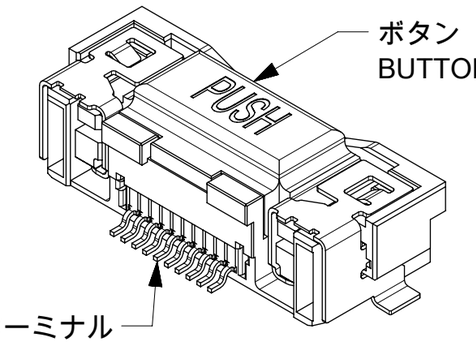

NOTES:
1.使用材料 MATERIAL
ハウジング : 液晶ポリマー, ガラス充填, UL94V-0(黒)
HOUSING : LIQUID CRYSTAL POLYMER, GLASS FILLED, UL94V-0(BLACK)
ボタン : 液晶ポリマー, ガラス充填, UL94V-0(ナチュラル)
BUTTON : LIQUID CRYSTAL POLYMER, GLASS FILLED, UL94V-0(NATURAL)
ターミナル : 銅合金(t=0.15)
TERMINAL : COPPER ALLOY
ロックネイル : 銅合金(t=0.15)
LOCK NAIL : COPPER ALLOY
2.めっき仕様 PLATING
ターミナル TERMINAL
接点部 ： 金めっき 0.1μm以上
CONTACT AREA : GOLD 0.1 MICROMETER MINIMUM
半田付け部 : 金めっき
SOLDER TAIL AREA : GOLD
下地めっき : ニッケル 1.0μm以上
UNDERPLATE : NICKEL 1.0 MICROMETER MINIMUM
ロックネイル LOCK NAIL
錫めっき(1.0μm以上)
TIN PLATING (1.0 MICROMETER MIN.)
3.平坦度は0.1ミリ以下とする。
COPLANALITY TO BE 0.1 MAXIMUM.

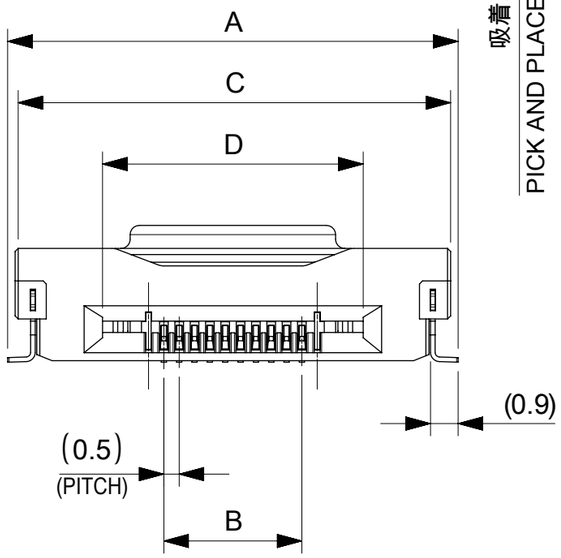

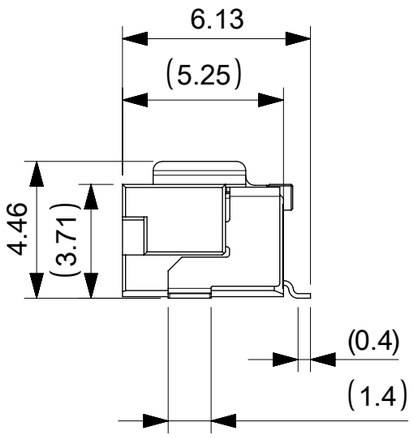

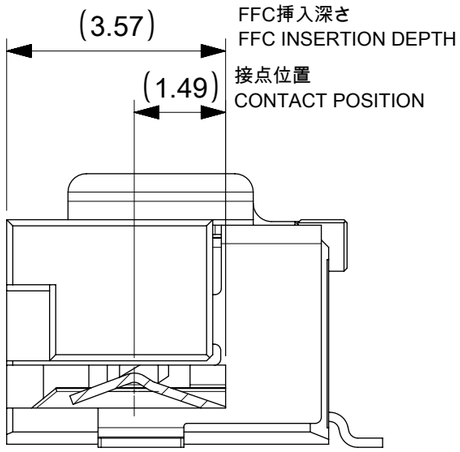

1.302	43.5	49.2	39.5	49.69	2004850080	80
1.195	38.5	44.2	34.5	44.69	2004850070	70
1.054	33.5	39.2	29.5	39.69	2004850060	60
0.958	29	34.7	25	35.19	2004850051	51
0.942	28.5	34.2	24.5	34.69	2004850050	50
0.796	23.5	29.2	19.5	29.69	2004850040	40
0.702	21	26.7	17	27.19	2004850035	35
0.650	18.5	24.2	14.5	24.69	2004850030	30
0.505	13.5	19.2	9.5	19.69	2004850020	20
0.359	8.5	14.2	4.5	14.69	2004850010	10
NET WEIGHT (g)	D	C	B	A	EMBOSSED PACKAGE	CIRCUIT
CONNECTOR SERIES NO. 20048510**						

THIS DRAWING CONTAINS INFORMATION THAT IS PROPRIETARY TO MOLEX ELECTRONIC TECHNOLOGIES, LLC AND SHOULD NOT BE USED WITHOUT WRITTEN PERMISSION

DIMENSION UNITS	mm
SCALE	5:1
GENERAL TOLERANCES (UNLESS SPECIFIED)	
ANGULAR TOL	± 1.0 °
4 PLACES	± 0.1
3 PLACES	± 0.1
2 PLACES	± 0.1
1 PLACE	± 0.1
0 PLACES	± 0.1
DRAFT WHERE APPLICABLE MUST REMAIN WITHIN DIMENSIONS	

CURRENT REV DESC:

EC NO: 753612
DRWN: RAJAGN 2023/06/15
CHK'D: HSHIMOYAMA 2023/06/16
APPR: YNAITO 2023/06/16

INITIAL REVISION:
DRWN: TYAMANE 2018/09/21
APPR: SHOSHIKAWA 2020/06/08

THIRD ANGLE PROJECTION | DRAWING: A3-SIZE | SERIES: 200485

molex

0.5FFC CONN. RA ONE TOUCH ASS'Y HT

PRODUCT CUSTOMER DRAWING

DOCUMENT NUMBER	DOC TYPE	DOC PART	REVISION
2004851000	PSD	000	E

MATERIAL NUMBER	CUSTOMER	SHEET NUMBER
SEE TABLE	GENERAL	1 OF 2

DOCUMENT STATUS	P1	RELEASE DATE	2023/06/16 06:21:39

FORMAT: master-tb-prod-A3
REVISION: J
DATE: 2020/01/14

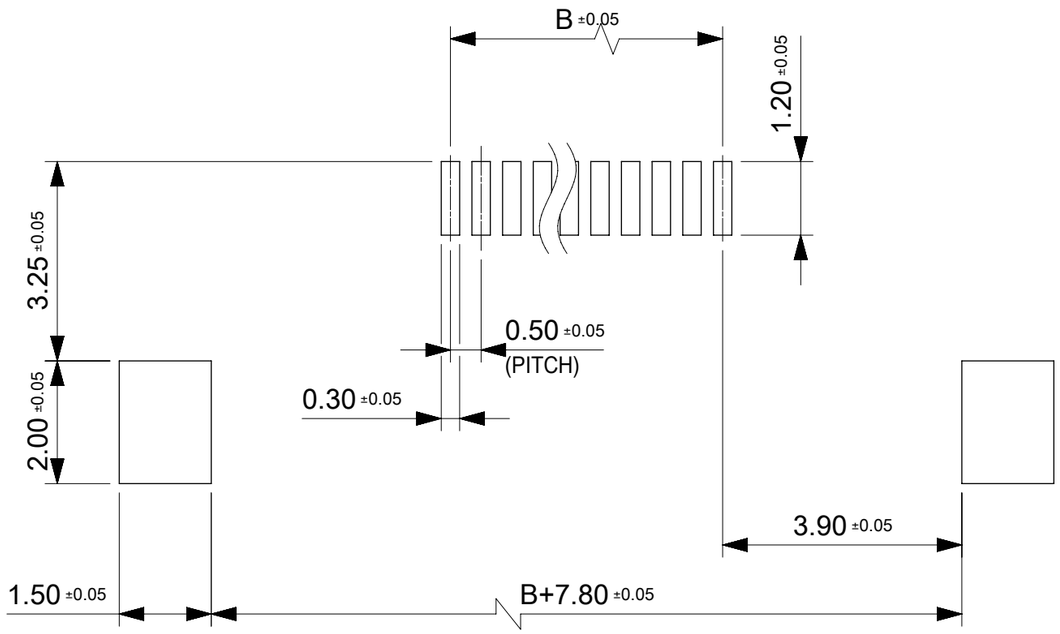

推奨PWB寸法
RECOMMENDED PWB DIMENSION

推奨メタルマスク厚、開口率：t=0.12mm, 80%
RECOMMENDED METAL MASK THICKNESS, APERTURE RATIO：t=0.12mm, 80%
ロックネイル部開口率は100%
APERTURE RATIO FOR LOCK NAIL : 100%

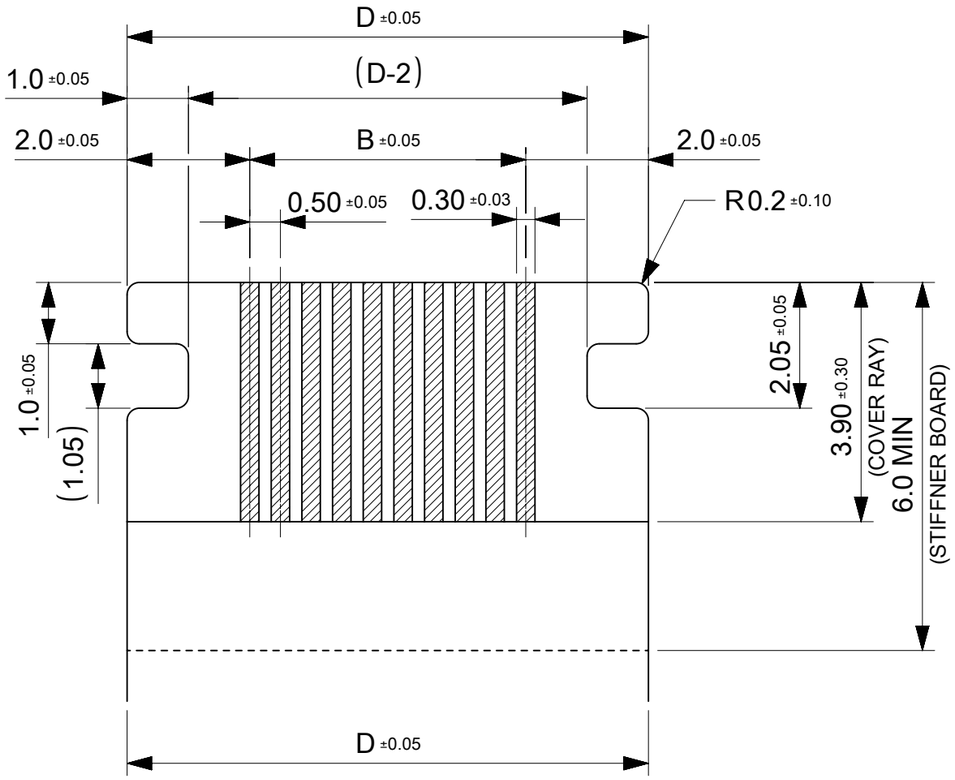

推奨FFC寸法
RECOMMENDED FFC DIMENSION

抜き方向は導体側から補強版側を推奨します
RECOMMENDED PUNCHING DIRECTION:
FROM CONDUCTOR SIDE TO STIFFENER SIDE

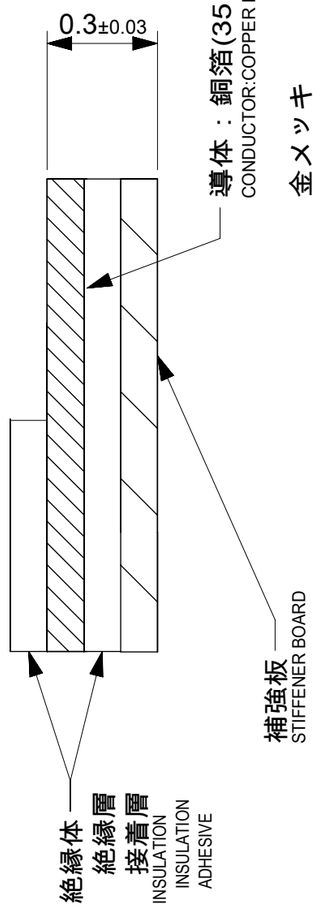

THIS DRAWING CONTAINS INFORMATION THAT IS PROPRIETARY TO MOLEX ELECTRONIC TECHNOLOGIES, LLC AND SHOULD NOT BE USED WITHOUT WRITTEN PERMISSION

DIMENSION UNITS	SCALE
mm	10:1

GENERAL TOLERANCES (UNLESS SPECIFIED)		
ANGULAR TOL	±	1.0 °
4 PLACES	±	0.1
3 PLACES	±	0.1
2 PLACES	±	0.1
1 PLACE	±	0.1
0 PLACES	±	0.1

DRAFT WHERE APPLICABLE MUST REMAIN WITHIN DIMENSIONS

CURRENT REV DESC:

EC NO: 753612
DRWN: RAJAGN 2023/06/15
CHK'D: HSHIMOYAMA 2023/06/16
APPR: YNAITO 2023/06/16

INITIAL REVISION:
DRWN: TYAMANE 2018/09/21
APPR: SHOSHIKAWA 2020/06/08

THIRD ANGLE PROJECTION | DRAWING: A3-SIZE | SERIES: 200485

molex

0.5FFC CONN. RA ONE TOUCH ASS'Y HT

PRODUCT CUSTOMER DRAWING

DOCUMENT NUMBER	DOC TYPE	DOC PART	REVISION
2004851000	PSD	000	E

MATERIAL NUMBER	CUSTOMER	SHEET NUMBER
SEE TABLE	GENERAL	2 OF 2

DOCUMENT STATUS	P1	RELEASE DATE	2023/06/16 06:21:39

FORMAT: master-tb-prod-A3
REVISION: J
DATE: 2020/01/14