TLV62150x 采用 3x3 QFN 封装的 4V 至 17V 1A 降压转换器

1 特性

- DCS-Control™拓扑技术
- 输入电压范围：4V 至 17V
- 输出电流高达 1A
- 0.9V 至 5V 可调节输出电压
- 引脚可选输出电压（标称值，+5%）
- 可编程软启动和跟踪
- 无缝节电模式转换
- 19μA 的静态电流（典型值）
- 可选运行频率
- 电源正常输出
- 100% 占空比模式
- 短路保护
- 过温保护
- 要了解改进的特性集，请见TPS62150
- 引脚至引脚兼容于 TLV62130
- 采用 3mm × 3mm 超薄四方扁平无引线 (VQFN)-16 封装

2 应用

- 标准 12V 导轨式电源
- 由单节或多节锂离子电池组成的负载点 (POL) 电源
- 电器、楼宇自动化
- 移动 PC、平板、调制解调器、摄像头
- TV、机顶盒、音频

3 说明

TLV62150x 器件是一款简单易用的同步降压 DC-DC 转换器，针对 高功率密度的应用 进行了优化。该器件的开关频率典型值高达 2.5MHz，允许使用小型电感器，通过利用DCS-Control™ 拓扑提供快速瞬态响应并实现高输出电压精度。

此器件具有 4V 至 17V 宽运行输入电压范围，非常适用于由锂离子或其它电池以及 12V 中间电源轨供电的系统。其输出电压为 0.9V 至 5V，支持高达 1A 的持续输出电流（使用 100% 占空比模式）。

输出电压启动斜坡由软启动引脚控制，从而允许作为独立电源或者在跟踪配置下的运行。通过配置使能和开漏电源正常引脚也有可能实现电源排序。

在节能模式下，器件可根据输入电压 (VIN) 生成约 19μA 的静态电流。负载较小时可自动且无缝进入节能模式，同时该模式可保持整个负载范围内的高效率。在关断模式下，此器件会关闭且关断期间的流耗少于 2μA。

该器件采用 3mm × 3mm (RGT) 16 引脚超薄型四方扁平无引线 (VQFN) 封装。

器件信息(1)

器件型号	封装	封装尺寸（标称值）
TLV62150	VQFN (16)	3.00mm x 3.00mm
TLV62150A		

(1) 要了解所有可用封装，请见数据表末尾的可订购产品附录。

典型应用电路原理图

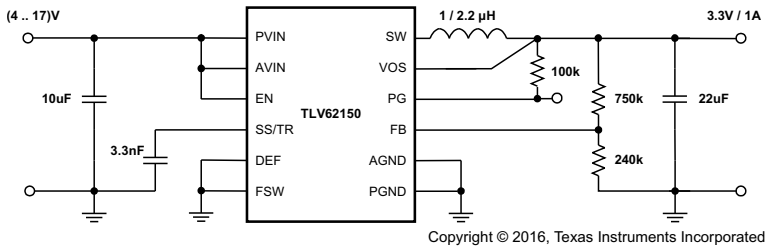

Copyright © 2016, Texas Instruments Incorporated

效率与输出电流间的关系

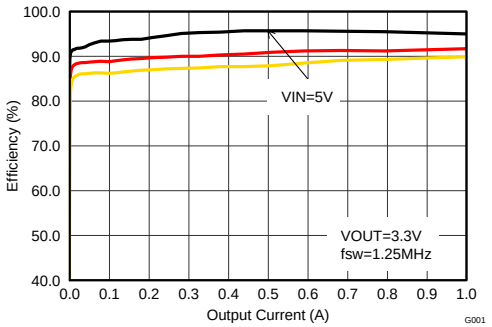

目录

1 特性 ... 1
2 应用 ... 1
3 说明 ... 1
4 修订历史记录 ... 2
5 Device Comparison Table ... 4
6 Pin Configuration and Functions ... 4
7 Specifications ... 5
7.1 Absolute Maximum Ratings ... 5
7.2 ESD Ratings ... 5
7.3 Recommended Operating Conditions ... 5
7.4 Thermal Information ... 5
7.5 Electrical Characteristics ... 6
7.6 Typical Characteristics ... 7
8 Detailed Description ... 8
8.1 Overview ... 8
8.2 Functional Block Diagram ... 8
8.3 Feature Description ... 9
8.4 Device Functional Modes ... 10
9 Application and Implementation ... 13
9.1 Application Information ... 13
9.2 Typical Application ... 13
9.3 System Examples ... 23
10 Power Supply Recommendations ... 27
11 Layout ... 28
11.1 Layout Guidelines ... 28
11.2 Layout Example ... 28
11.3 Thermal Considerations ... 29
12 器件和文档支持 ... 30
12.1 器件支持 ... 30
12.2 相关链接 ... 30
12.3 文档支持 ... 30
12.4 接收文档更新通知 ... 30
12.5 社区资源 ... 30
12.6 商标 ... 30
12.7 静电放电警告 ... 30
12.8 Glossary ... 31
13 机械、封装和可订购信息 ... 32

4 修订历史记录

注：之前版本的页码可能与当前版本有所不同。

Changes from Revision D (August 2015) to Revision E — **Page**

- 已添加 引脚至引脚兼容能力至 特性 ... 1
- 已添加 项目至 应用 列表 ... 1
- Corrected temperatures in Thermal Information ... 5
- Added Power Good Pin Logic Tables 1 and 2 ... 9
- 已添加 *接收文档更新通知* ... 30

Changes from Revision C (June 2015) to Revision D — **Page**

- Changed Power Good Threshold Voltage, Falling (%V_{OUT}) MAX spec from 93% to 94% ... 6

Changes from Revision B (June 2013) to Revision C — **Page**

- 已添加 *ESD 额定值表，特性 描述 部分，器件功能模式，应用和实现部分，电源相关建议部分，布局部分，器件*和*文档支持部分*以及*机械、封装*和*可订购信息部分* ... 1

Changes from Revision A (February 2013) to Revision B — **Page**

- 已添加 新器件版本 TLV62150A 至数据表 ... 1
- Added text to Power Good section regarding the TLV62150A function. ... 9
- Added additional option to the footnote for Pin-Selectable Output Voltage (DEF) section. ... 10
- Added text to Frequency Selection (FSW) section regarding pin control. ... 10
- Added text to Tracking Function section for clarification. ... 17
- Changed schematic for Figure 38 ... 24

版权 © 2012–2016, Texas Instruments Incorporated

Changes from Original (February 2012) to Revision A **Page**

- Added text to Terminal Functions table to clarify Description for AGND, PGND, and Exposed Thermal Pad. 4
- Added text to Power Save Mode Operation section for clarification. 11
- Changed text in the Layout Considerations section for clarification. 28

Copyright © 2012–2016, Texas Instruments Incorporated

5 Device Comparison Table

PART NUMBER	OUTPUT VOLTAGE	POWER GOOD LOGIC LEVEL (EN=Low)
TLV62150	Adjustable	High Impedance
TLV62150A	Adjustable	Low

6 Pin Configuration and Functions

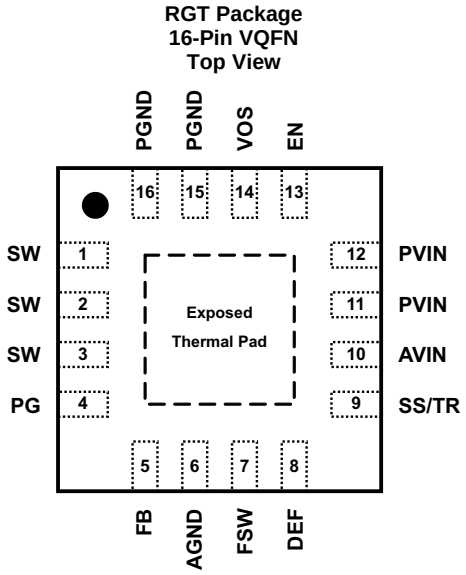

Pin Functions

PIN(1)		I/O	DESCRIPTION
NAME	NO.		
AGND	6	—	Analog Ground. Must be connected directly to the Exposed Thermal Pad and common ground plane.
AVIN	10	I	Supply voltage for control circuitry. Connect to same source as PVIN.
DEF	8	I	Output Voltage Scaling (Low = nominal, High = nominal + 5%)(2)
EN	13	I	Enable input (High = enabled, Low = disabled)(2)
FB	5	I	Voltage feedback. Connect resistive voltage divider to this pin.
FSW	7	I	Switching Frequency Select (Low ≈ 2.5 MHz, High ≈ 1.25 MHz(3) for typical operation)(2)
SW	1,2,3	O	Switch node, which is connected to the internal MOSFET switches. Connect inductor between SW and output capacitor.
PG	4	O	Output power good (High = V_{OUT} ready, Low = V_{OUT} below nominal regulation) ; open drain (requires pull-up resistor)
PGND	15,16	—	Power ground. Must be connected directly to the Exposed Thermal Pad and common ground plane.
PVIN	11,12	I	Supply voltage for power stage. Connect to same source as AVIN.
SS/TR	9	I	Soft-Start / Tracking Pin. An external capacitor connected to this pin sets the internal voltage reference rise time. It can be used for tracking and sequencing.
VOS	14	I	Output voltage sense pin and connection for the control loop circuitry.
Exposed Thermal Pad	—	—	Must be connected to AGND (pin 6), PGND (pin 15,16) and common ground plane. See the *Layout Example*. Must be soldered to achieve appropriate power dissipation and mechanical reliability.

(1) For more information about connecting pins, see *Detailed Description* and *Application and Implementation* sections.
(2) An internal pull-down resistor keeps logic level low, if pin is floating.
(3) Connect FSW to VOUT or PG in this case.

Copyright © 2012–2016, Texas Instruments Incorporated

7 Specifications

7.1 Absolute Maximum Ratings

over operating free-air temperature range (unless otherwise noted) (1)

		MIN	MAX	UNIT
Pin voltage (2)	AVIN, PVIN	–0.3	20	V
	EN, SS/TR	–0.3	V_{IN}+0.3	
	SW	–0.3	V_{IN}+0.3	V
	DEF, FSW, FB, PG, VOS	–0.3	7	V
Power Good sink current	PG		10	mA
Operating junction temperature	T_J	–40	125	°C
Storage temperature	T_{stg}	–65	150	

(1) Stresses beyond those listed under *Absolute Maximum Ratings* may cause permanent damage to the device. These are stress ratings only, which do not imply functional operation of the device at these or any other conditions beyond those indicated under *Recommended Operating Conditions*. Exposure to absolute-maximum-rated conditions for extended periods may affect device reliability.
(2) All voltages are with respect to network ground terminal.

7.2 ESD Ratings

			VALUE	UNIT
V_{ESD}	Electrostatic discharge (1)	Human body model (HBM), per ANSI/ESDA/JEDEC JS-001, all pins (2)	±2000	V
		Charged device model (CDM), per JEDEC specification JESD22-C101, all pins (3)	±500	

(1) ESD testing is performed according to the respective JESD22 JEDEC standard.
(2) JEDEC document JEP155 states that 500-V HBM allows safe manufacturing with a standard ESD control process.
(3) JEDEC document JEP157 states that 250-V CDM allows safe manufacturing with a standard ESD control process.

7.3 Recommended Operating Conditions

	MIX	MAX	UNIT
Supply Voltage	4	17	V
Temperature Range, T_A	–40	85	°C
Operating junction temperature, T_J	–40	125	

7.4 Thermal Information

THERMAL METRIC (1)		TLV62150 RGT [VQFN] 16 PINS	UNIT
$R_{\theta JA}$	Junction-to-ambient thermal resistance	45	°C/W
$R_{\theta JC(top)}$	Junction-to-case (top) thermal resistance	53.6	°C/W
$R_{\theta JB}$	Junction-to-board thermal resistance	17.4	°C/W
ψ_{JT}	Junction-to-top characterization parameter	1.1	°C/W
ψ_{JB}	Junction-to-board characterization parameter	17.4	°C/W
$R_{\theta JC(bot)}$	Junction-to-case (bottom) thermal resistance	4.5	°C/W

(1) For more information about traditional and new thermal metrics, see the *Semiconductor and IC Package Thermal Metrics* application report, SPRA953.

Copyright © 2012–2016, Texas Instruments Incorporated

7.5 Electrical Characteristics

over operating free-air temperature range (T_A = –40°C to 85°C), typical values at V_{IN} = 12 V and T_A = 25°C (unless otherwise noted)

PARAMETER		TEST CONDITIONS	MIN	TYP	MAX	UNIT
POWER SUPPLY						
V_{IN}	Input Voltage Range (1)		4		17	V
I_Q	Operating Quiescent Current	EN=High, I_{OUT}=0 mA, device not switching		19	27	µA
I_{SD}	Shutdown Current (2)	EN=Low		1.5	4	µA
V_{UVLO}	Undervoltage Lockout Threshold	Falling Input Voltage (PWM mode operation)	2.6	2.7	2.8	V
		Hysteresis		200		mV
T_{SD}	Thermal Shutdown Temperature			160		°C
	Thermal Shutdown Hysteresis			20		
CONTROL (EN, DEF, FSW, SS/TR, PG)						
V_H	High Level Input Threshold Voltage (EN, DEF, FSW)		0.9			V
V_L	Low Level Input Threshold Voltage (EN, DEF, FSW)				0.3	V
I_{LKG}	Input Leakage Current (EN, DEF, FSW)	EN=V_{IN} or GND; DEF, FSW=V_{OUT} or GND		0.01	1	µA
V_{TH_PG}	Power Good Threshold Voltage	Rising (%V_{OUT})	92%	95%	98%	
		Falling (%V_{OUT})	87%	90%	94%	
V_{OL_PG}	Power Good Output Low	I_{PG}=-2 mA		0.07	0.3	V
I_{LKG_PG}	Input Leakage Current (PG)	V_{PG}=1.8 V		1	400	nA
$I_{SS/TR}$	SS/TR Pin Source Current		2.3	2.5	2.7	µA
POWER SWITCH						
$R_{DS(ON)}$	High-Side MOSFET ON-Resistance	V_{IN}≥6 V		90		mΩ
	Low-Side MOSFET ON-Resistance	V_{IN}≥6 V		40		mΩ
I_{LIMF}	High-Side MOSFET Forward Current Limit (3)	V_{IN} =12 V, T_A=25°C	1.4	1.7		A
OUTPUT						
I_{LKG_FB}	Input Leakage Current (FB)	V_{FB}=0.8 V		1	100	nA
V_{OUT}	Output Voltage Range	V_{IN} ≥ V_{OUT}	0.9		5	V
	DEF (Output Voltage Programming)	DEF=0 (GND)		V_{OUT}		
		DEF=1 (V_{OUT})		V_{OUT}+5%		
	Initial Output Voltage Accuracy (4)	PWM mode operation, V_{IN} ≥ V_{OUT} +1 V	780	800	820	mV
	Load Regulation (5)	V_{IN}=12 V, V_{OUT}=3.3 V, PWM mode operation		0.05		%/A
	Line Regulation (5)	4 V ≤ V_{IN} ≤ 17 V, V_{OUT}=3.3 V, I_{OUT}= 1 A, PWM mode operation		0.02		%/V

(1) The device is still functional down to Under Voltage Lockout (see parameter VUVLO).
(2) Current into AVIN+PVIN pin.
(3) This is the static current limit. It can be temporarily higher in applications due to internal propagation delay (see *Current Limit and Short Circuit Protection*).
(4) This is the accuracy provided by the device itself (line and load regulation effects are not included).
(5) Line and load regulation depend on external component selection and layout (see Figure 20 and Figure 21).

Copyright © 2012–2016, Texas Instruments Incorporated

7.6 Typical Characteristics

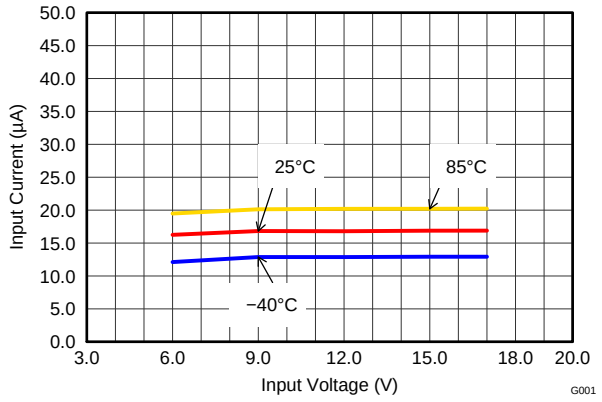

Figure 1. Quiescent Current

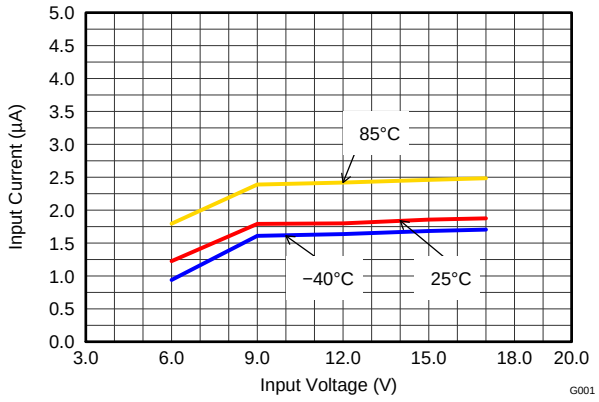

Figure 2. Shutdown Current

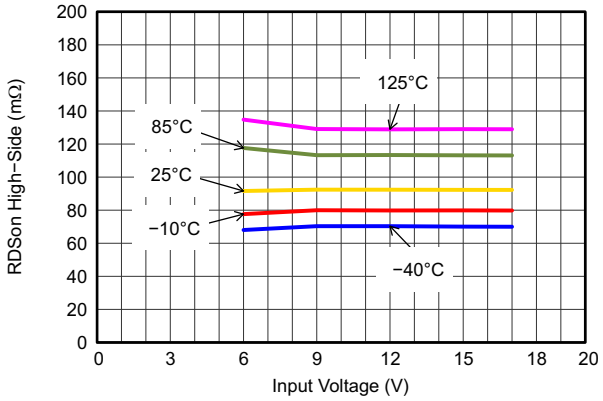

Figure 3. High-Side Switch Resistance

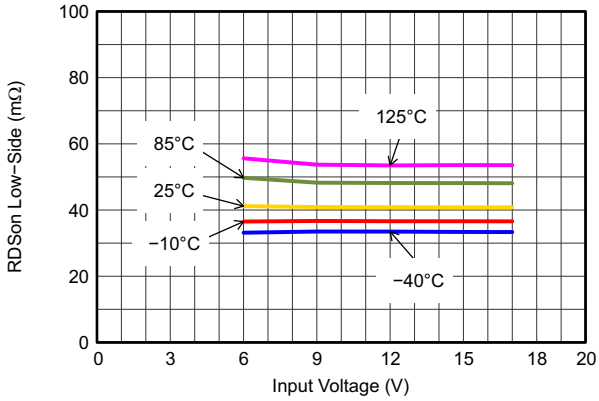

Figure 4. Low-Side Switch Resistance

Copyright © 2012–2016, Texas Instruments Incorporated

8 Detailed Description

8.1 Overview

The TLV62150 synchronous switched-mode power converters are based on DCS-Control™ (**D**irect **C**ontrol with **S**eamless Transition into Power Save Mode), an advanced regulation topology, that combines the advantages of hysteretic, voltage mode and current mode control including an AC loop directly associated to the output voltage. This control loop takes information about output voltage changes and feeds it directly to a fast comparator stage. It sets the switching frequency, which is constant for steady state operating conditions, and provides immediate response to dynamic load changes. To get accurate DC load regulation, a voltage feedback loop is used. The internally compensated regulation network achieves fast and stable operation with small external components and low ESR capacitors.

The DCS-Control™ topology supports Pulse Width Modulation (PWM) mode for medium and heavy load conditions and a Power Save Mode at light loads. During PWM, it operates at its nominal switching frequency in continuous conduction mode. This frequency is typically about 2.5 MHz or 1.25 MHz with a controlled frequency variation depending on the input voltage. If the load current decreases, the converter enters Power Save Mode to sustain high efficiency down to very light loads. In Power Save Mode the switching frequency decreases linearly with the load current. Since DCS-Control™ supports both operation modes within one single building block, the transition from PWM to Power Save Mode is seamless without effects on the output voltage.

An internal current limit supports nominal output currents of up to 1 A.

The TLV62150 offers both excellent DC voltage and superior load transient regulation, combined with very low output voltage ripple, minimizing interference with RF circuits.

8.2 Functional Block Diagram

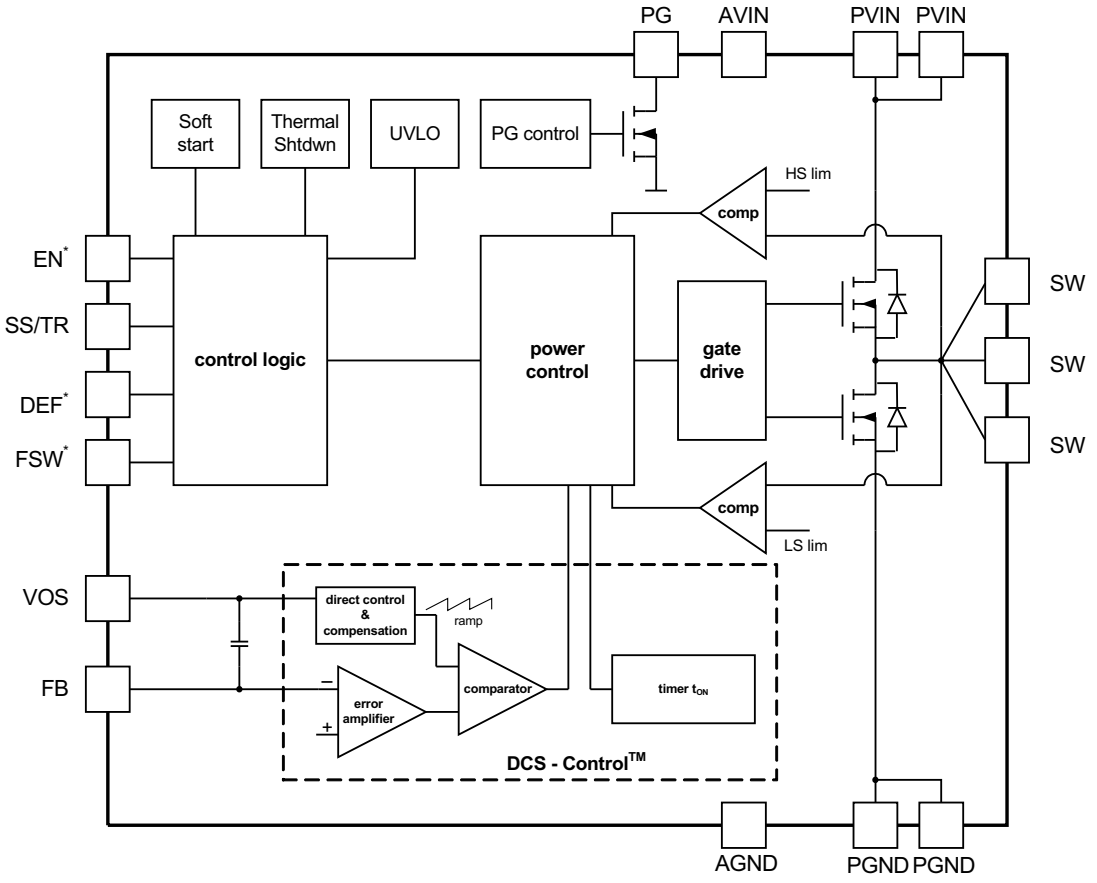

Copyright © 2016, Texas Instruments Incorporated

Copyright © 2012–2016, Texas Instruments Incorporated

8.3 Feature Description

8.3.1 Enable / Shutdown (EN)

When Enable (EN) is set High, the device starts operation. Shutdown is forced if EN is pulled Low with a shutdown current of typically 1.5 µA. During shutdown, the internal power MOSFETs as well as the entire control circuitry are turned off. The EN signal must be set externally to High or Low. An internal pull-down resistor of about 400 kΩ is connected and keeps EN logic low, if the pin is floating. It is disconnected if the pin is High.

Connecting the EN pin to an appropriate output signal of another power rail provides sequencing of multiple power rails.

8.3.2 Soft Start / Tracking (SS/TR)

The internal soft start circuitry controls the output voltage slope during startup. This avoids excessive inrush current and ensures a controlled output voltage rise time. It also prevents unwanted voltage drops from high-impedance power sources or batteries. When EN is set to start device operation, the device starts switching after a delay of about 50µs and VOUT rises with a slope controlled by an external capacitor connected to the SS/TR pin. See Figure 32 and Figure 33 for typical startup operation.

Using a very small capacitor (or leaving SS/TR pin un-connected) provides fastest startup behavior. There is no theoretical limit for the longest startup time. The TLV62150 can start into a pre-biased output. During monotonic pre-biased startup, the low-side MOSFET is not allowed to turn on until the device's internal ramp sets an output voltage above the pre-bias voltage. If the device is set to shutdown (EN=GND), undervoltage lockout or thermal shutdown, an internal resistor pulls the SS/TR pin down to ensure a proper low level. Returning from those states causes a new startup sequence as set by the SS/TR connection.

A voltage supplied to SS/TR can be used for tracking a master voltage. The output voltage will follow this voltage in both directions up and down (see *Application and Implementation*).

8.3.3 Power Good (PG)

The TLV62150 has a built in power good (PG) function to indicate whether the output voltage has reached its appropriate level or not. The PG signal can be used for startup sequencing of multiple rails. The PG pin is an open-drain output that requires a pull-up resistor (to any voltage below 7 V). It can sink 2 mA of current and maintain it's specified logic low level. With TLV62150 it is high impedance when the device is turned off due to EN, UVLO or thermal shutdown. TLV62150A features PG=Low in this case and can be used to actively discharge Vout (see *Figure 37*). VIN must remain present for the PG pin to stay Low. See SLVA644 for application details. If not used, the PG pin should be connected to GND but may be left floating.

Table 1. Power Good Pin Logic Table (TLV62150)

Device State		PG Logic Status	
		High Impedance	Low
Enable (EN=High)	$V_{FB} \geq V_{TH_PG}$	√	
	$V_{FB} \leq V_{TH_PG}$		√
Shutdown (EN=Low)		√	
UVLO	$0.7V < V_{IN} < V_{UVLO}$	√	
Thermal Shutdown	$T_J > T_{SD}$	√	
Power Supply Removal	$V_{IN} < 0.7V$	√	

Copyright © 2012–2016, Texas Instruments Incorporated

Table 2. Power Good Pin Logic Table (TLV62150A)

Device State		PG Logic Status	
		High Impedance	Low
Enable (EN=High)	$V_{FB} \geq V_{TH_PG}$	√	
	$V_{FB} \leq V_{TH_PG}$		√
Shutdown (EN=Low)			√
UVLO	$0.7\ V < V_{IN} < V_{UVLO}$		√
Thermal Shutdown	$T_J > T_{SD}$		√
Power Supply Removal	$V_{IN} < 0.7\ V$	√	

8.3.4 Pin-Selectable Output Voltage (DEF)

The output voltage of the TLV62150 can be increased by 5% above the nominal voltage by setting the DEF pin to High (1). When DEF is Low, the device regulates to the nominal output voltage. Increasing the nominal voltage allows adapting the power supply voltage to the variations of the application hardware. More detailed information on voltage margining using TLV62150 can be found in SLVA489. A pull down resistor of about 400 kΩ is internally connected to the pin, to ensure a proper logic level if the pin is high impedance or floating after initially set to Low. The resistor is disconnected if the pin is set High.

8.3.5 Frequency Selection (FSW)

To get high power density with very small solution size, a high switching frequency allows the use of small external components for the output filter. However switching losses increase with the switching frequency. If efficiency is the key parameter, more than solution size, the switching frequency can be set to half (1.25 MHz typical) by pulling FSW to High. It is mandatory to start with FSW=Low to limit inrush current, which can be done by connecting to VOUT or PG. Running with lower frequency a higher efficiency, but also a higher output voltage ripple, is achieved. Pull FSW to Low for high frequency operation (2.5 MHz typical). To get low ripple and full output current at the lower switching frequency, it's recommended to use an inductor of at least 2.2 µH. The switching frequency can be changed during operation, if needed. A pull down resistor of about 400kOhm is internally connected to the pin, acting the same way as at the DEF Pin (see above).

8.3.6 Undervoltage Lockout (UVLO)

If the input voltage drops, the undervoltage lockout prevents misoperation of the device by switching off both the power FETs. The undervoltage lockout threshold is set typically to 2.7 V. The device is fully operational for voltages above the UVLO threshold and turns off if the input voltage trips the threshold. The converter starts operation again once the input voltage exceeds the threshold by a hysteresis of typically 200 mV.

8.3.7 Thermal Shutdown

The junction temperature (T_J) of the device is monitored by an internal temperature sensor. If T_J exceeds 160°C (typical), the device goes into thermal shut down. Both the high-side and low-side power FETs are turned off and PG goes high impedance. When T_J decreases below the hysteresis amount, the converter resumes normal operation, beginning with Soft Start. To avoid unstable conditions, a hysteresis of typically 20°C is implemented on the thermal shut down temperature.

8.4 Device Functional Modes

8.4.1 Pulse Width Modulation (PWM) Operation

The TLV62150 operates with pulse width modulation in continuous conduction mode (CCM) with a nominal switching frequency of 2.5 MHz or 1.25 MHz, selectable with the FSW pin. The frequency variation in PWM is controlled and depends on V_{IN}, V_{OUT} and the inductance. The device operates in PWM mode as long the output current is higher than half the inductor's ripple current. To maintain high efficiency at light loads, the device enters Power Save Mode at the boundary to discontinuous conduction mode (DCM). This happens if the output current becomes smaller than half the inductor's ripple current.

(1) Maximum allowed voltage is 7 V. Therefore, it's recommended to connect it to VOUT or PG, not VIN.

Copyright © 2012–2016, Texas Instruments Incorporated

Device Functional Modes (continued)

8.4.2 Power Save Mode Operation

The built in Power Save Mode of the TLV62150 is entered seamlessly, if the load current decreases. This secures a high efficiency in light load operation. The device remains in Power Save Mode as long as the inductor current is discontinuous.

In Power Save Mode the switching frequency decreases linearly with the load current maintaining high efficiency. The transition into and out of Power Save Mode happens within the entire regulation scheme and is seamless in both directions.

TLV62150 includes a fixed on-time circuitry. This on-time, in steady-state operation, can be estimated (for FSW=Low) as:

$$t_{ON} = \frac{V_{OUT}}{V_{IN}} \times 400\ \text{ns} \tag{1}$$

For very small output voltages, an absolute minimum on-time of about 80 ns is kept to limit switching losses. The operating frequency is thereby reduced from its nominal value, which keeps efficiency high. Also the off-time can reach its minimum value at high duty cycles. The output voltage remains regulated in such cases. Using t_{ON}, the typical peak inductor current in Power Save Mode can be approximated by:

$$I_{LPSM(peak)} = \frac{(V_{IN} - V_{OUT})}{L} \times t_{ON} \tag{2}$$

When V_{IN} decreases to typically 15% above V_{OUT}, the TLV62150 does not enter Power Save Mode, regardless of the load current. The device maintains output regulation in PWM mode.

8.4.3 100% Duty-Cycle Operation

The duty cycle of the buck converter is given by D=Vout/Vin and increases as the input voltage comes close to the output voltage. In this case, the device starts 100% duty cycle operation turning on the high-side switch 100% of the time. The high-side switch stays turned on as long as the output voltage is below the internal setpoint. This allows the conversion of small input to output voltage differences, for example, for longest operation time of battery-powered applications. In 100% duty cycle mode, the low-side FET is switched off.

The minimum input voltage to maintain output voltage regulation, depending on the load current and the output voltage level, can be calculated as:

$$V_{IN(min)} = V_{OUT(min)} + I_{OUT}\left(R_{DS(on)} + R_L\right) \tag{3}$$

where

- I_{OUT} is the output current.
- $R_{DS(on)}$ is the $R_{DS(on)}$ of the high-side FET.
- R_L is the DC resistance of the inductor used.

8.4.4 Current Limit and Short Circuit Protection

The TLV62150 devices are protected against heavy load and short circuit events. At heavy loads, the current limit determines the maximum output current. If the current limit is reached, the high-side FET is turned off. Avoiding shoot through current, then the low-side FET switches on to allow the inductor current to decrease. The low-side current limit is typically 1.2 A. The high-side FET turns on again, only if the current in the low-side FET has decreased below the low side current limit threshold.

Copyright © 2012–2016, Texas Instruments Incorporated

Device Functional Modes (continued)

The output current of the device is limited by the current limit (see *Electrical Characteristics*). Due to internal propagation delay, the actual current can exceed the static current limit during that time. The dynamic current limit can be calculated as follows:

$$I_{peak(typ)} = I_{LIMF} + \frac{V_L}{L} \times t_{PD}$$

where

- I_{LIMF} is the static current limit, specified in the *Electrical Characteristics*.
- L is the inductor value.
- V_L is the voltage across the inductor (V_{IN} - V_{OUT}).
- t_{PD} is the internal propagation delay. (4)

The current limit can exceed static values, especially if the input voltage is high and very small inductances are used. The dynamic high side switch the peak current can be calculated as follows:

$$I_{peak(typ)} = I_{LIMF} + \frac{(V_{IN} - V_{OUT})}{L} \times 30ns \quad (5)$$

Copyright © 2012–2016, Texas Instruments Incorporated

9 Application and Implementation

NOTE

Information in the following applications sections is not part of the TI component specification, and TI does not warrant its accuracy or completeness. TI's customers are responsible for determining suitability of components for their purposes. Customers should validate and test their design implementation to confirm system functionality.

9.1 Application Information

The TLV62150 is a switched-mode step-down converter, able to convert a 4-V to 17-V input voltage into a 0.9-V to 5-V output voltage, providing up to 1 A. It needs a minimum amount of external components. Apart from the LC output filter and the input capacitor, the TLV62150 (TLV62150A) needs an additional resistive divider to set the output voltage level.

9.2 Typical Application

Figure 5 shows an application for Point-of-Load Power Supply Using TLV62150.

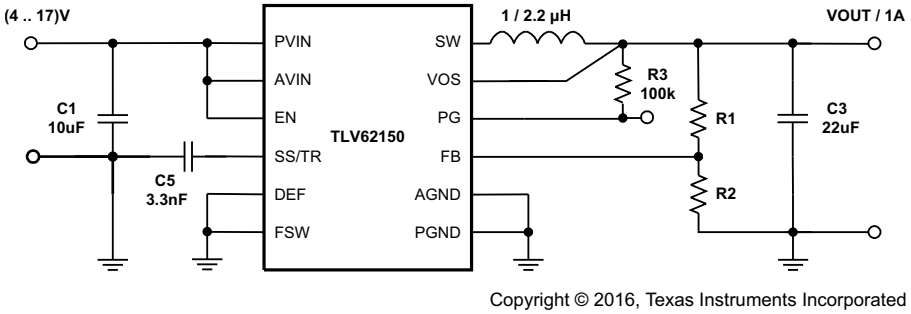

Copyright © 2016, Texas Instruments Incorporated

Figure 5. 1-A Step-Down Converter

9.2.1 Design Requirements

The following design guideline provides a component selection to operate the device within the recommended operating conditions. Using the FSW pin, the design can be optimized for highest efficiency or smallest solution size and lowest output voltage ripple. For highest efficiency set FSW=High and the device operates at the lower switching frequency. For smallest solution size and lowest output voltage ripple set FSW=Low and the device operates with higher switching frequency. The typical values for all measurements are V_{IN} = 12 V, V_{OUT} = 3.3 V and T = 25°C, using the external components of Table 3.

9.2.2 Detailed Design Procedure

The component selection used for measurements is given as follows:

Table 3. List of Components

REFERENCE	DESCRIPTION	MANUFACTURER(1)
IC	17-V, 1-A Step-Down Converter, VQFN	TLV62150RGT, Texas Instruments
L1	2.2 µH, 0.165 × 0.165 in	XFL4020-222MEB, Coilcraft
C1	10 µF, 25 V, Ceramic	Standard

(1) See *Third-Party Products* Disclaimer

Typical Application (continued)

Table 3. List of Components (continued)

REFERENCE	DESCRIPTION	MANUFACTURER(1)
C3	22 µF, 6.3 V, Ceramic	Standard
C5	3300 pF, 25 V, Ceramic	
R1	depending on Vout	
R2	depending on Vout	
R3	100 kΩ, Chip, 0603, 1/16 W, 1%	Standard

9.2.2.1 Programming the Output Voltage

The output voltage of the TLV62150 (TLV62150A) is adjustable. It can be programmed for output voltages from 0.9 V to 5 V by using a resistive divider from VOUT to AGND. The voltage at the FB pin is regulated to 800 mV. The value of the output voltage is set by the selection of the resistive divider from Equation 6. It is recommended to choose resistor values which allow a current of at least 2 µA, meaning the value of R2 should not exceed 400 kΩ. Lower resistor values are recommended for highest accuracy and most robust design.

$$R_1 = R_2 \left(\frac{V_{OUT}}{V_{REF}} - 1 \right) \quad (6)$$

In case the FB pin gets opened, the device clamps the output voltage at the VOS pin internally to about 7.4 V.

9.2.2.2 External Component Selection

The external components have to fulfill the needs of the application, but also the stability criteria of the devices control loop. The TLV62150 is optimized to work within a range of external components. The LC output filter's inductance and capacitance have to be considered in conjunction, creating a double pole, responsible for the corner frequency of the converter (see *Output Filter and Loop Stability* section). Table 4 can be used to simplify the output filter component selection. Checked cells represent combinations that are proven for stability by simulation and lab test. Further combinations should be checked for each individual application. See SLVA463 for details.

Table 4. L-C Output Filter Combinations(1)

	4.7 µF	10 µF	22 µF	47 µF	100 µF	200 µF	400 µF
0.47 µH							
1 µH			√	√	√	√	
2.2 µH		√	√(2)	√	√	√	
3.3 µH		√	√	√	√		
4.7 µH							

(1) The values in the table are nominal values. The effective capacitance was considered to vary by +20% and -50%.
(2) This LC combination is the standard value and recommended for most applications.

The TLV62150 can be run with an inductor as low as 1 µH or 2.2 µH. FSW should be set Low in this case. However, for applications running with the low frequency setting (FSW=High) or with low input voltages, 3.3 µH is recommended.

9.2.2.2.1 Inductor Selection

The inductor selection is affected by several effects like inductor ripple current, output ripple voltage, PWM-to-PSM transition point and efficiency. In addition, the inductor selected has to be rated for appropriate saturation current and DC resistance (DCR). Equation 7 and Equation 8 calculate the maximum inductor current under static load conditions.

$$I_{L(max)} = I_{OUT(max)} + \frac{\Delta I_{L(max)}}{2} \quad (7)$$

Copyright © 2012–2016, Texas Instruments Incorporated

$$\Delta I_{L(max)} = V_{OUT} \times \left(\frac{1 - \frac{V_{OUT}}{V_{IN(max)}}}{L_{(min)} \times f_{SW}} \right)$$

where

- I_L(max) is the maximum inductor current.
- ΔI_L is the Peak to Peak Inductor Ripple Current.
- L(min) is the minimum effective inductor value.
- f_{SW} is the actual PWM Switching Frequency. (8)

Calculating the maximum inductor current using the actual operating conditions gives the minimum saturation current of the inductor needed. A margin of about 20% is recommended to add. A larger inductor value is also useful to get lower ripple current, but increases the transient response time and size as well. The following inductors have been used with the TLV62150 and are recommended for use:

Table 5. List of Inductors

Type	Inductance [µH]	Saturation Current [A](1)	Dimensions [L x B x H] mm	MANUFACTURER(2)
XFL4020-222ME_	2.2 µH, ±20%	3.5	4 × 4 × 2.1	Coilcraft
XFL3012-222MEC	2.2 µH, ±20%	1.6	3 × 3 × 1.2	Coilcraft
XFL3012-332MEC	3.3 µH, ±20%	1.4	3 × 3 × 1.2	Coilcraft
VLS252012T-2R2M1R3	2.2 µH, ±20%	1.3	2.5 × 2 × 1.2	TDK
LPS3015-332	3.3 µH, ±20%	1.4	3 × 3 × 1.4	Coilcraft
744025003	3.3 µH, ±20%	1.5	2.8 × 2.8 × 2.8	Wuerth
PSI25201B-2R2MS	2.2 µH, ±20%	1.3	2 × 2.5 × 1.2	Cyntec
NR3015T-2R2M	2.2 µH, ±20%	1.5	3 × 3 × 1.5	Taiyo Yuden

(1) SLVSB7156869Lower of I_{RMS} at 40°C rise or I_{SAT} at 30% drop.
(2) See *Third-Party Products* Disclaimer

The inductor value also determines the load current at which Power Save Mode is entered:

$$I_{load(PSM)} = \frac{1}{2} \Delta I_L \quad (9)$$

Using Equation 8, this current level can be adjusted by changing the inductor value.

9.2.2.2.2 Capacitor Selection

9.2.2.2.2.1 Output Capacitor

The recommended value for the output capacitor is 22 µF. The architecture of the TLV62150 allows the use of tiny ceramic output capacitors which have low equivalent series resistance (ESR). These capacitors provide low output voltage ripple and are recommended. To keep its low resistance up to high frequencies and to get narrow capacitance variation with temperature, it's recommended to use X7R or X5R dielectric. Using a higher value can have some advantages like smaller voltage ripple and a tighter DC output accuracy in Power Save Mode (see SLVA463).

Note: In power save mode, the output voltage ripple depends on the output capacitance, Its ESR and the peak inductor current. Using ceramic capacitors provides small ESR and low ripple.

Copyright © 2012–2016, Texas Instruments Incorporated

9.2.2.2.2 Input Capacitor

For most applications, 10 µF will be sufficient and is recommended, though a larger value reduces input current ripple further. The input capacitor buffers the input voltage for transient events and also decouples the converter from the supply. A low ESR multilayer ceramic capacitor is recommended for best filtering and should be placed between PVIN and PGND as close as possible to those pins. Even though AVIN and PVIN must be supplied from the same input source, it's recommended to place a capacitance of 0.1 uF from AVIN to AGND, to avoid potential noise coupling. An RC, low-pass filter from PVIN to AVIN may be used but is not required.

9.2.2.2.3 Soft-Start Capacitor

A capacitance connected between SS/TR pin and AGND allows a user programmable start-up slope of the output voltage. A constant current source supports 2.5 µA to charge the external capacitance. The capacitor required for a given soft-start ramp time for the output voltage is given by:

$$C_{SS} = t_{SS} \times \frac{2.5\mu A}{1.25V} [F] \quad (10)$$

where

- C_{SS} is the capacitance (F) required at the SS/TR pin.
- t_{SS} is the desired soft-start ramp time (s).

NOTE

DC Bias effect: High capacitance ceramic capacitors have a DC Bias effect, which will have a strong influence on the final effective capacitance. Therefore the right capacitor value has to be chosen carefully. Package size and voltage rating in combination with dielectric material are responsible for differences between the rated capacitor value and the effective capacitance.

9.2.2.3 Tracking Function

If a tracking function is desired, the SS/TR pin can be used for this purpose by connecting it to an external tracking voltage. The output voltage tracks that voltage. If the tracking voltage is between 50 mV and 1.2 V, the FB pin will track the SS/TR pin voltage as described in Equation 11 and shown in Figure 6.

$$V_{FB} \approx 0.64 \times V_{SS/TR} \quad (11)$$

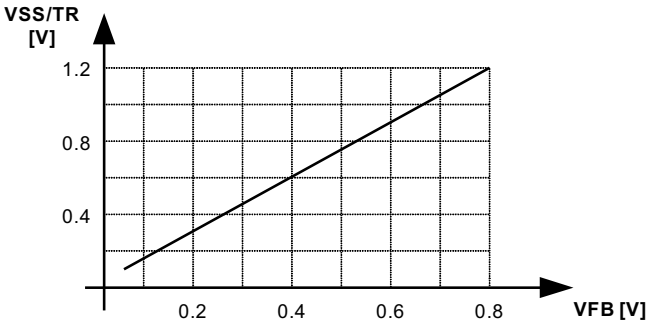

Figure 6. Voltage Tracking Relationship

Copyright © 2012–2016, Texas Instruments Incorporated

Once the SS/TR pin voltage reaches about 1.2 V, the internal voltage is clamped to the internal feedback voltage and device goes to normal regulation. This works for rising and falling tracking voltages with the same behavior, as long as the input voltage is inside the recommended operating conditions. For decreasing SS/TR pin voltage, the device does not sink current from the output. So, the resulting decrease of the output voltage may be slower than the SS/TR pin voltage if the load is light. When driving the SS/TR pin with an external voltage, do not exceed the voltage rating of the SS/TR pin which is V_{IN}+0.3 V.

If the input voltage drops into undervoltage lockout or even down to zero, the output voltage will go to zero, independent of the tracking voltage. Figure 7 shows how to connect devices to get ratiometric and simultaneous sequencing by using the tracking function.

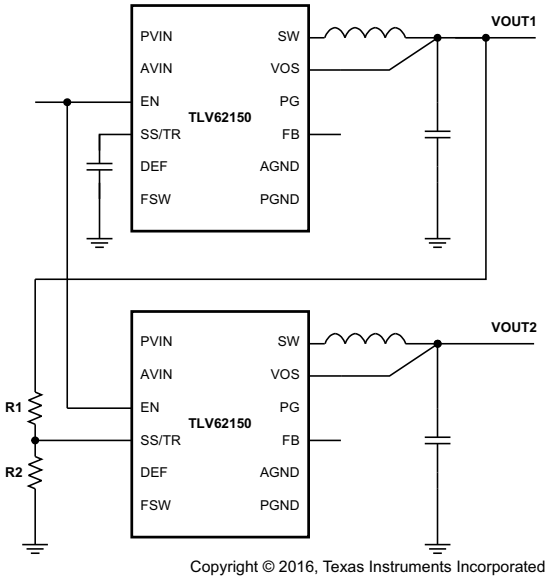

Figure 7. Sequence for Ratiometric and Simultaneous Startup

The resistive divider of R1 and R2 can be used to change the ramp rate of VOUT2 faster, slower or the same as VOUT1.

A sequential startup is achieved by connecting the PG pin of VOUT1 to the EN pin of VOUT2. Ratiometric start up sequence happens if both supplies are sharing the same soft start capacitor. Equation 10 calculates the soft start time, though the SS/TR current has to be doubled. Details about these and other tracking and sequencing circuits are found in SLVA470.

Note: If the voltage at the FB pin is below its typical value of 0.8 V, the output voltage accuracy may have a wider tolerance than specified.

9.2.2.4 Output Filter and Loop Stability

The TLV62150 is internally compensated to be stable with L-C filter combinations corresponding to a corner frequency to be calculated with Equation 12:

$$f_{LC} = \frac{1}{2\pi\sqrt{L \times C}} \quad (12)$$

Proven nominal values for inductance and ceramic capacitance are given in Table 4 and are recommended for use. Different values may work, but care has to be taken on the loop stability which will be affected. More information including a detailed L-C stability matrix can be found in SLVA463.

The TLV62150 includes an internal 25 pF feedforward capacitor, connected between the VOS and FB pins. This capacitor impacts the frequency behavior and sets a pole and zero in the control loop with the resistors of the feedback divider, per equation Equation 13 and Equation 14:

Copyright © 2012–2016, Texas Instruments Incorporated

$$f_{zero} = \frac{1}{2\pi \times R_1 \times 25pF} \quad (13)$$

$$f_{pole} = \frac{1}{2\pi \times 25pF} \times \left(\frac{1}{R_1} + \frac{1}{R_2} \right) \quad (14)$$

Though the TLV62150 is stable without the pole and zero being in a particular location, adjusting their location to the specific needs of the application can provide better performance in Power Save mode and/or improved transient response. An external feedforward capacitor can also be added. A more detailed discussion on the optimization for stability versus transient response can be found in SLVA289 and SLVA466.

Copyright © 2012–2016, Texas Instruments Incorporated

9.2.3 Application Curves

V_{IN} = 12 V, V_{OUT} = 3.3 V, T_A = 25°C, (unless otherwise noted)

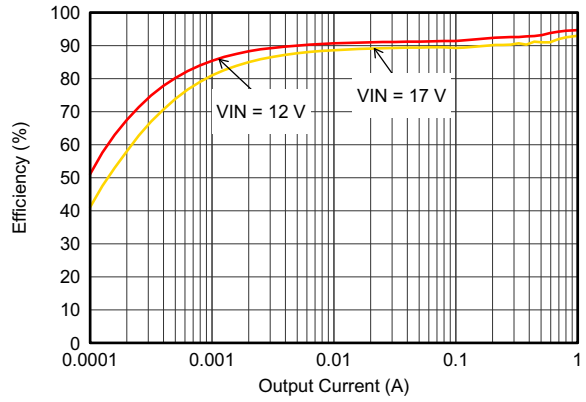

Figure 8. Efficiency With 1.25 MHz, Vout = 5 V

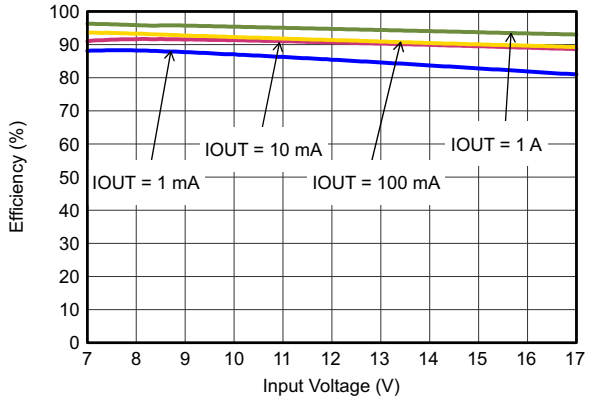

Figure 9. Efficiency With 1.25 MHz, Vout = 5 V

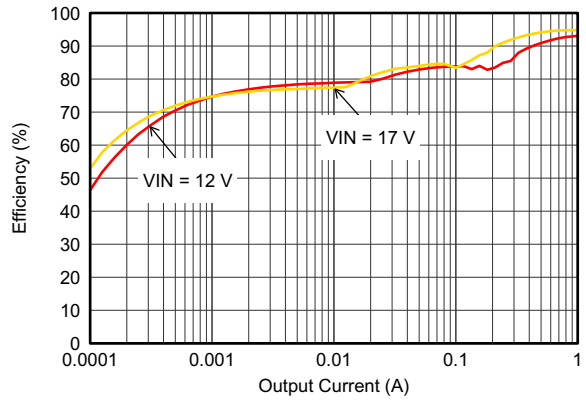

Figure 10. Efficiency With 2.5 MHz, Vout = 5 V

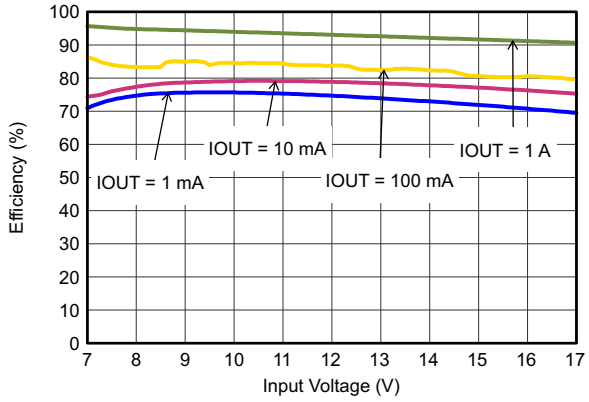

Figure 11. Efficiency With 2.5 MHz, Vout = 5 V

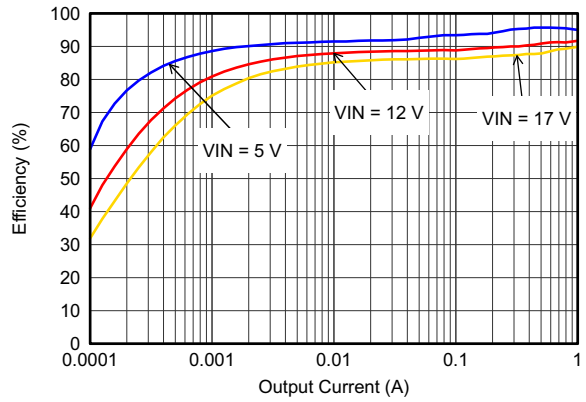

Figure 12. Efficiency With 1.25 MHz, Vout = 3.3 V

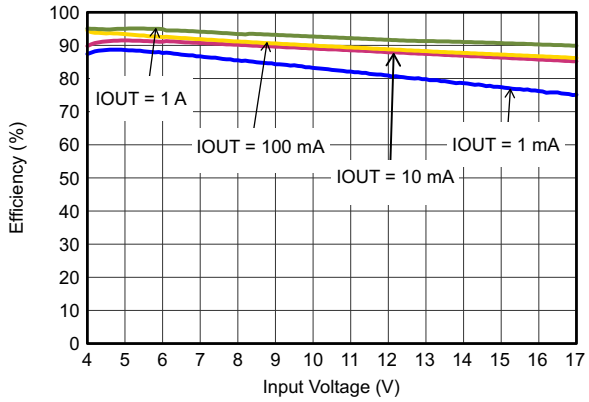

Figure 13. Efficiency With 1.25 MHz, Vout = 3.3 V

Copyright © 2012–2016, Texas Instruments Incorporated

V_{IN} = 12 V, V_{OUT} = 3.3 V, T_A = 25°C, (unless otherwise noted)

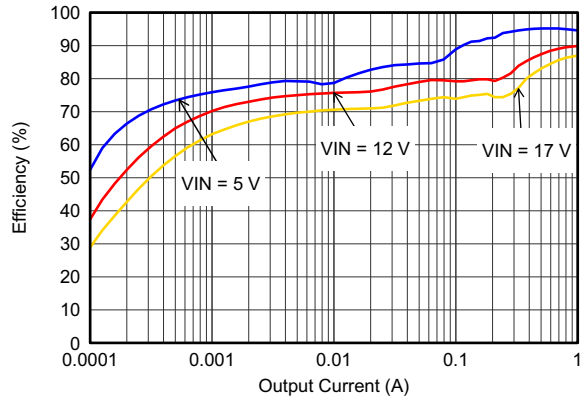

Figure 14. Efficiency With 2.5 MHz, Vout = 3.3 V

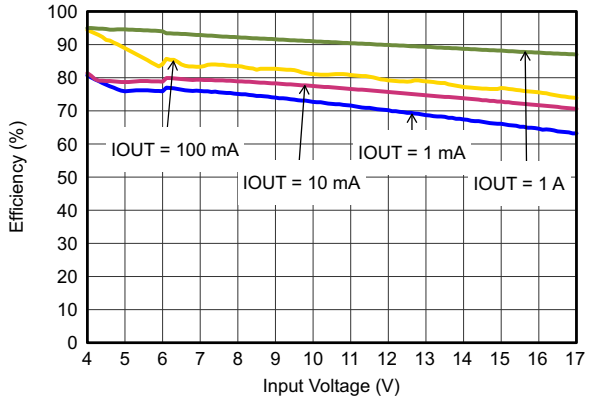

Figure 15. Efficiency With 2.5 MHz, Vout = 3.3 V

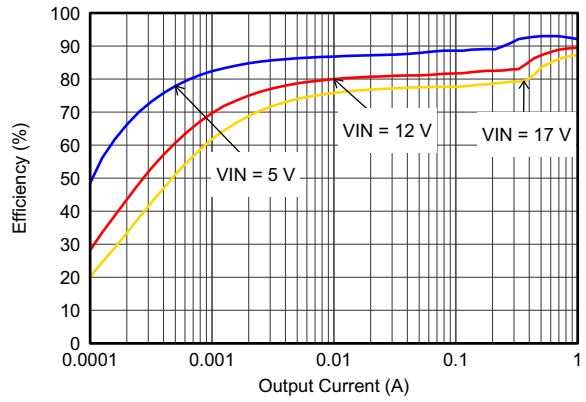

Figure 16. Efficiency With 1.25 MHz, Vout = 1.8 V

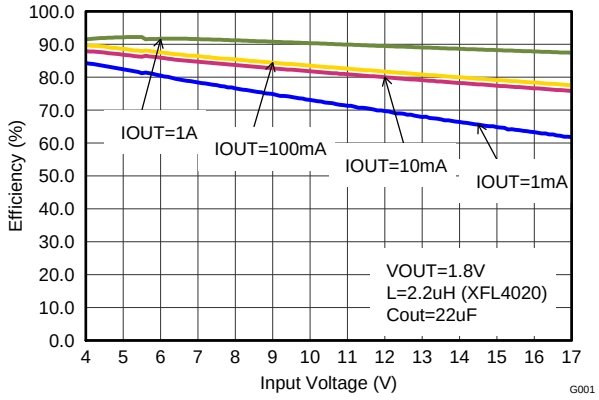

Figure 17. Efficiency With 1.25 MHz, Vout = 1.8 V

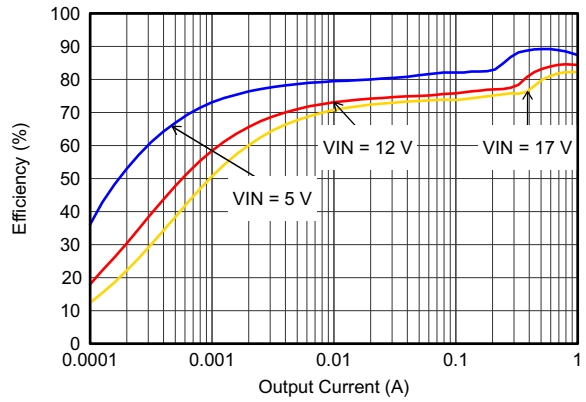

Figure 18. Efficiency With 1.25 MHz, Vout = 0.9 V

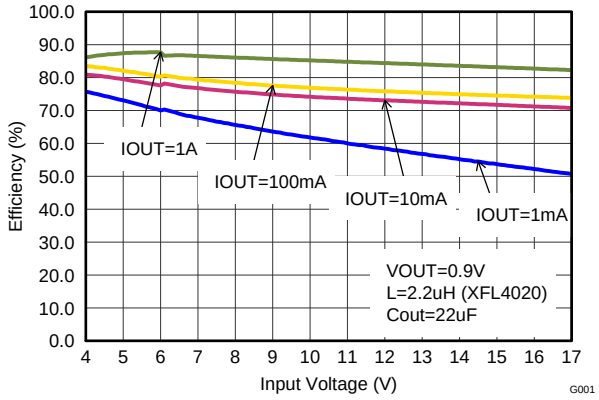

Figure 19. Efficiency With 1.25 MHz, Vout=0.9 V

Copyright © 2012–2016, Texas Instruments Incorporated

V_{IN} = 12 V, V_{OUT} = 3.3 V, T_A = 25°C, (unless otherwise noted)

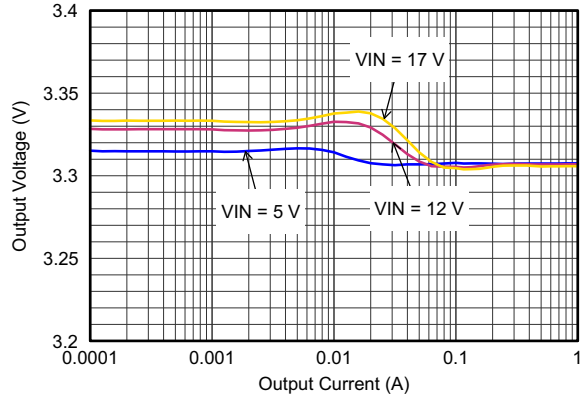

Figure 20. Output Voltage Accuracy (Load Regulation)

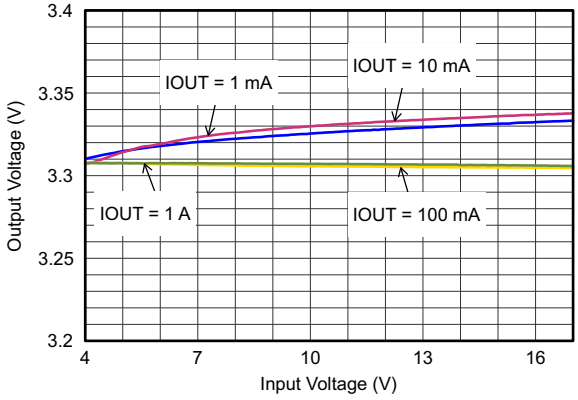

Figure 21. Output Voltage Accuracy (Line Regulation)

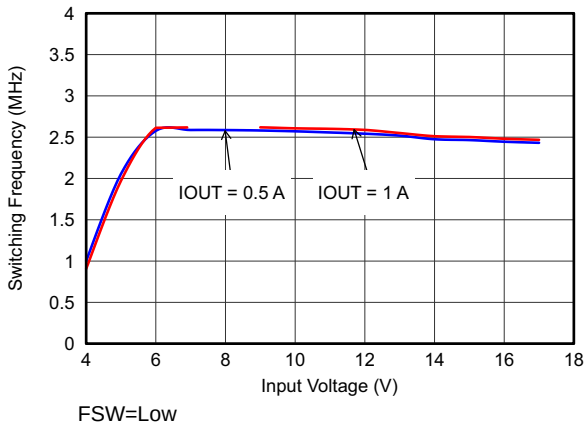

Figure 22. Switching Frequency

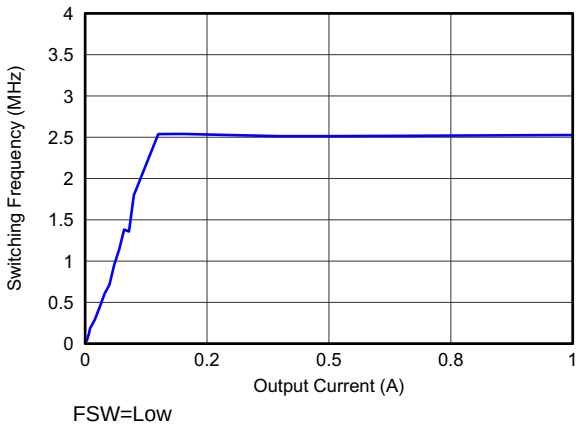

Figure 23. Switching Frequency

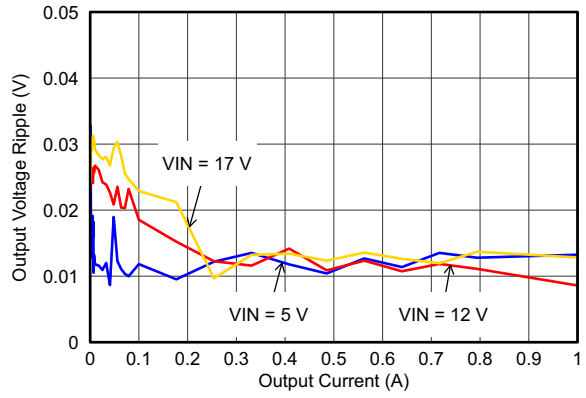

Figure 24. Output Voltage Ripple

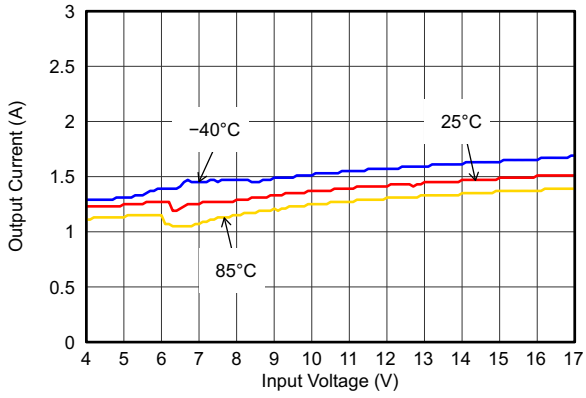

Figure 25. Maximum Output Current

Copyright © 2012–2016, Texas Instruments Incorporated

V_{IN} = 12 V, V_{OUT} = 3.3 V, T_A = 25°C, (unless otherwise noted)

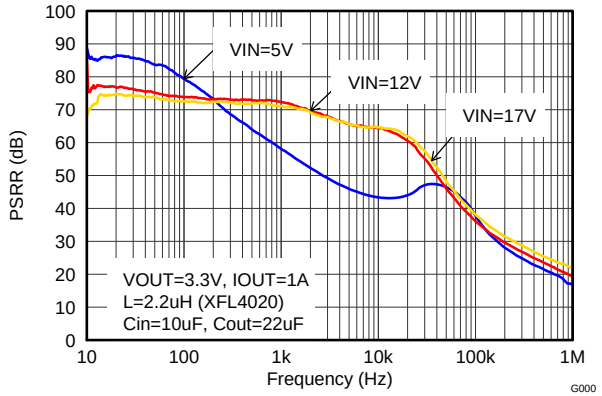

I_{OUT} = 1 A

Figure 26. Power Supply Rejection Ratio, F_{SW} = 2.5 MHz

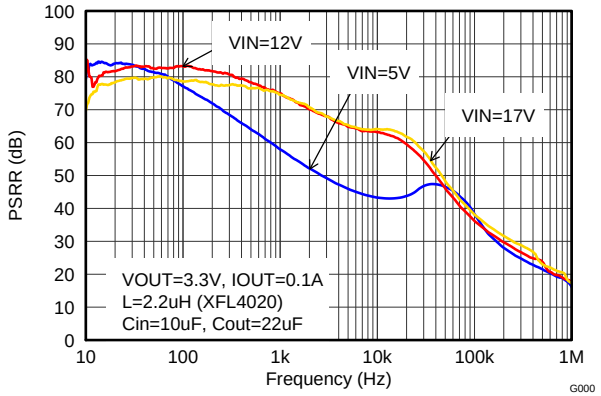

I_{OUT} = 0.1 A

Figure 27. Power Supply Rejection Ratio, F_{SW} = 2.5 MHz

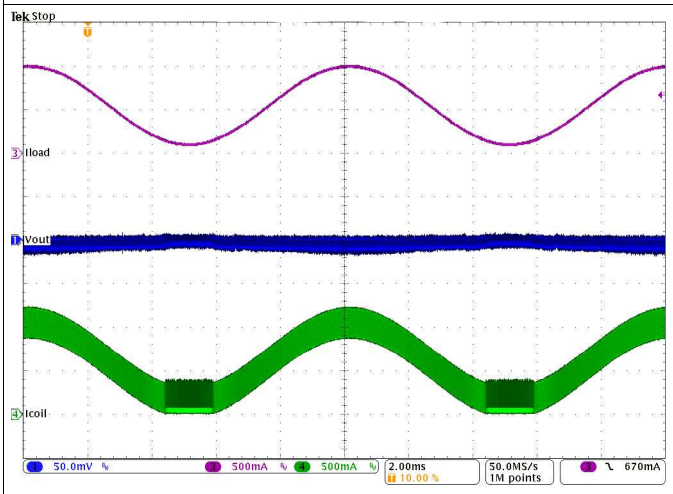

Figure 28. PWM-PSM-Transition (V_{IN} = 12 V, V_{OUT} = 3.3 V With 50 mV/div)

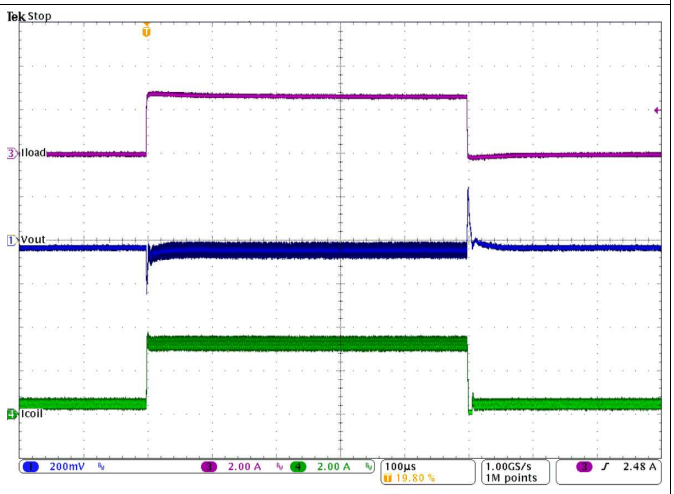

Figure 29. Load Transient Response (I_{OUT}= 0.5 to 1 to 0.5 A, V_{IN} = 12 V, V_{OUT} = 3.3 V)

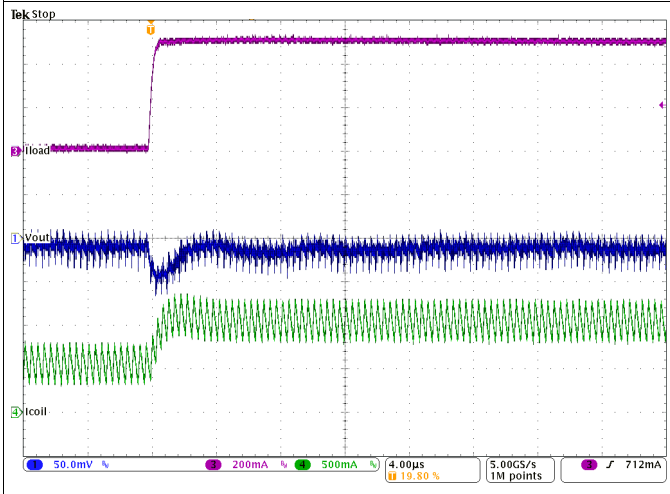

Figure 30. Load Transient Response of Figure 29, Rising Edge

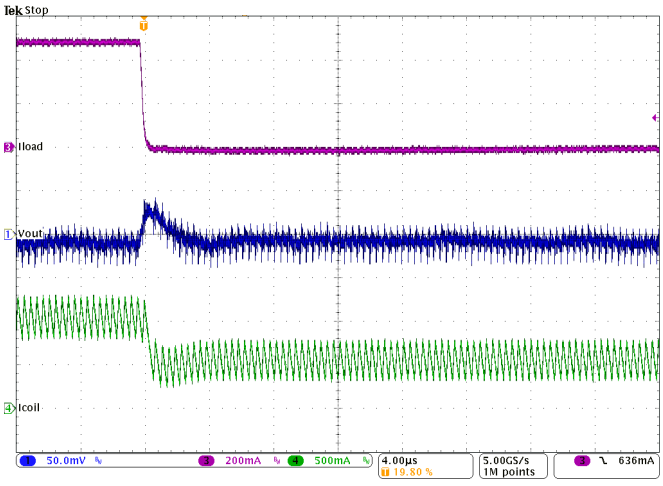

Figure 31. Load Transient Response of Figure 29, Falling Edge

Copyright © 2012–2016, Texas Instruments Incorporated

V_{IN} = 12 V, V_{OUT} = 3.3 V, T_A = 25°C, (unless otherwise noted)

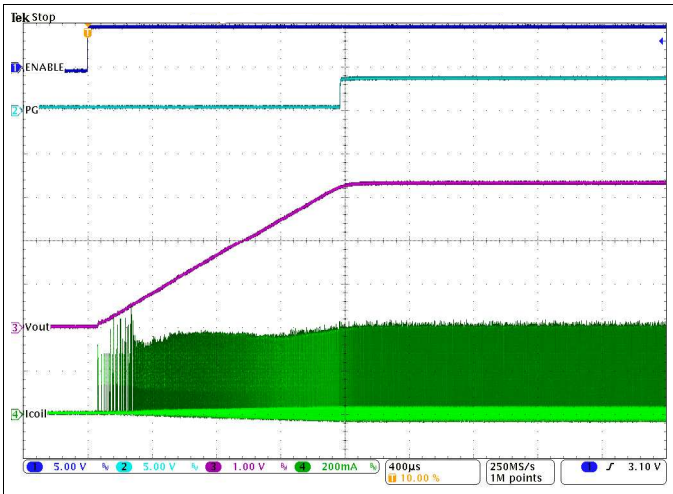

Figure 32. Startup Into 100 mA

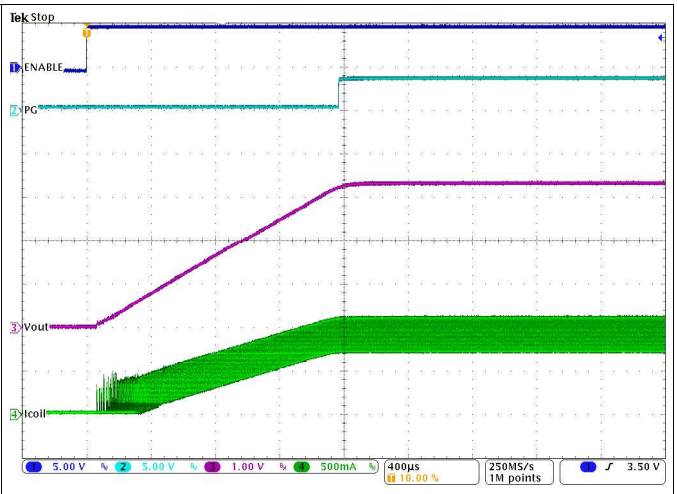

Figure 33. Startup Into 1 A

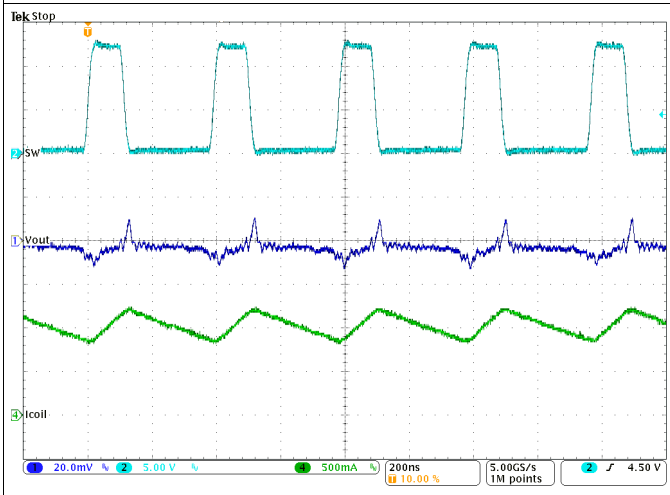

Figure 34. Typical Operation In PWM Mode (I_{OUT} = 1 A)

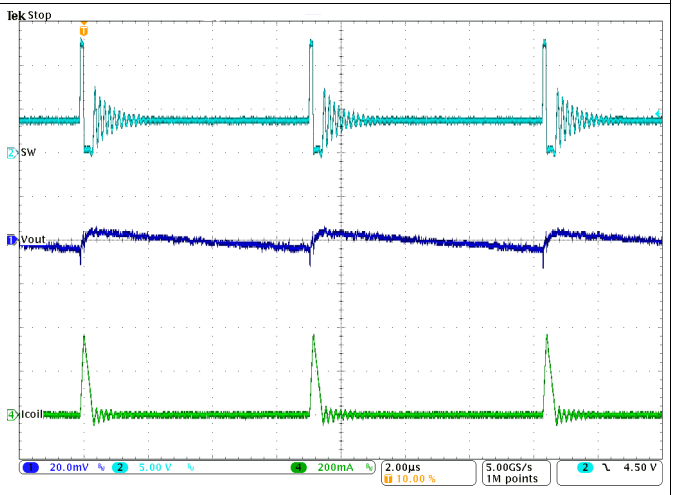

Figure 35. Typical Operation in Power Save Mode (I_{OUT} = 10 mA)

9.3 System Examples

9.3.1 LED Power Supply

The TLV62150x can be used as a power supply for power LEDs. The FB pin can be easily set down to lower values than nominal by using the SS/TR pin. With that, the voltage drop on the sense resistor is low to avoid excessive power loss. Since this pin provides 2.5 µA, the FB pin voltage can be adjusted by an external resistor per Equation 15. This drop, proportional to the LED current, is used to regulate the output voltage (anode voltage) to a proper level to drive the LED. Both analog and PWM dimming are supported with the TLV62150. Figure 36 shows an application circuit, tested with analog dimming:

Copyright © 2012–2016, Texas Instruments Incorporated

System Examples (continued)

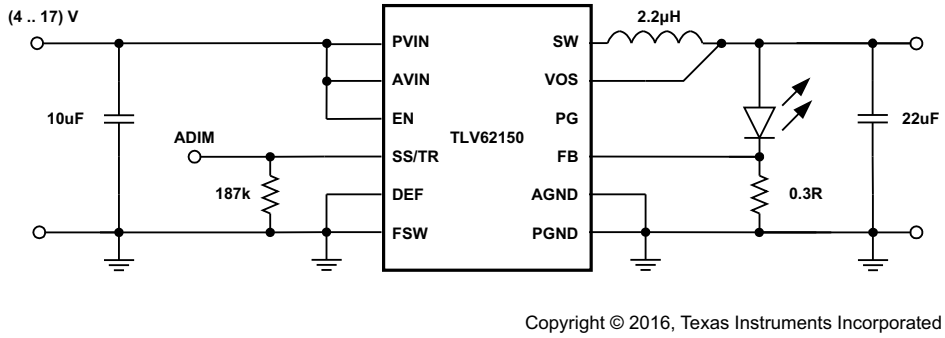

Copyright © 2016, Texas Instruments Incorporated

Figure 36. 1-A Single LED Power Supply

The resistor at SS/TR sets the FB voltage to a level of about 300 mV and is calculated from Equation 15.

$$V_{FB} = 0.64 \times 2.5\mu A \times R_{SS/TR} \quad (15)$$

The device now supplies a constant current, set by the resistor at the FB pin, by regulating the output voltage accordingly. The minimum input voltage has to be rated according the forward voltage needed by the LED used. More information is available in the Application Note SLVA451.

9.3.2 Active Output Discharge

The TLV62150A pulls the PG pin Low, when the device is shut down by EN, UVLO or thermal shutdown. Connecting PG to Vout through a resistor can be used to discharge Vout in those cases (see Figure 37). The discharge rate can be adjusted by R3, which is also used to pull up the PG pin in normal operation. For reliability, keep the maximum current into the PG pin less than 10 mA.

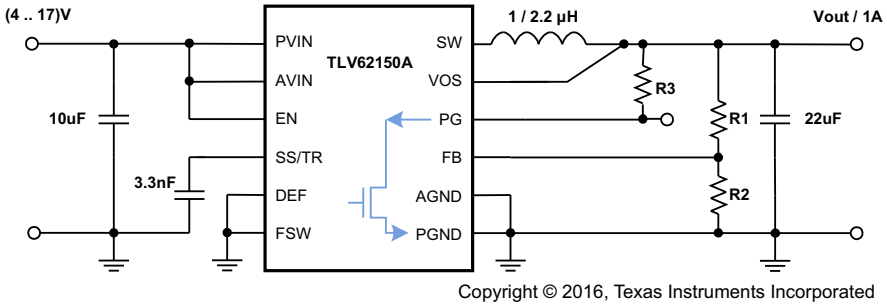

Copyright © 2016, Texas Instruments Incorporated

Figure 37. Discharge Vout Through PG Pin with TLV62150A

9.3.3 Inverting Power Supply

The TLV62150 can be used as inverting power supply by rearranging external circuitry as shown in Figure 38. As the former GND node now represents a voltage level below system ground, the voltage difference between VIN and VOUT has to be limited for operation to the maximum supply voltage of 17 V (see Equation 16).

$$V_{IN} + \left|V_{OUT}\right| \le V_{IN\,max} \quad (16)$$

Copyright © 2012–2016, Texas Instruments Incorporated

System Examples (continued)

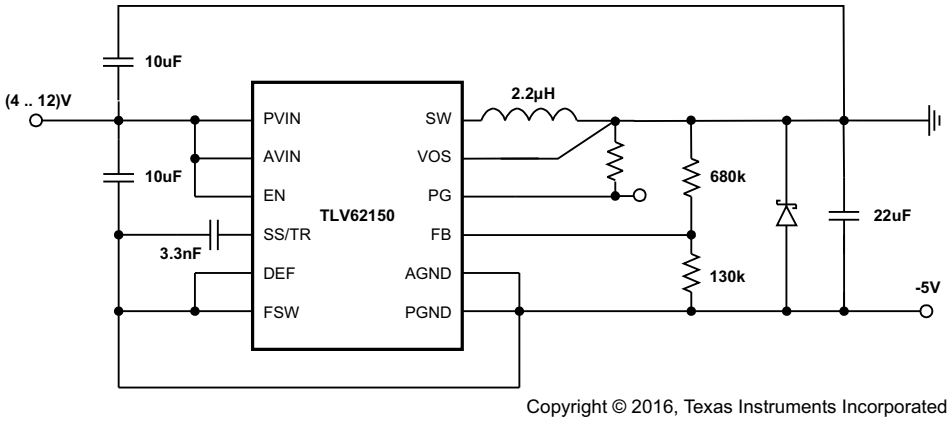

Copyright © 2016, Texas Instruments Incorporated

Figure 38. –5-V Inverting Power Supply

The transfer function of the inverting power supply configuration differs from the buck mode transfer function, incorporating a Right Half Plane Zero additionally. The loop stability has to be adapted and an output capacitance of at least 22 µF is recommended. A detailed design example is given in SLVA469.

9.3.4 Various Output Voltages

The following example circuits show how to configure the external circuitry to furnish different output voltages at 1 A.

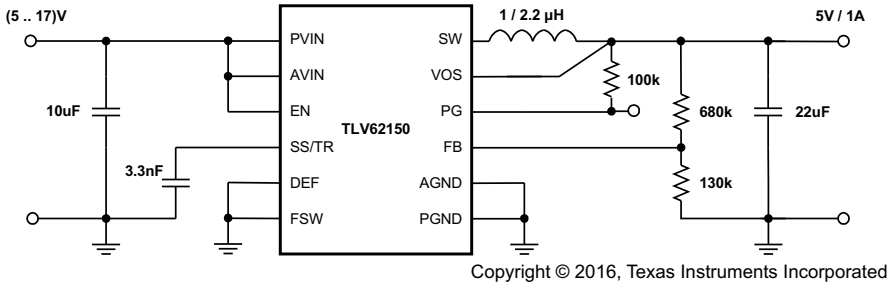

Copyright © 2016, Texas Instruments Incorporated

Figure 39. 5-V/1-A Power Supply

System Examples (continued)

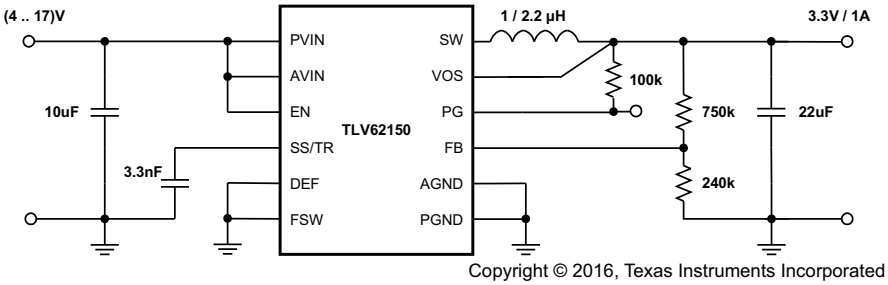

Copyright © 2016, Texas Instruments Incorporated

Figure 40. 3.3-V/1-A Power Supply

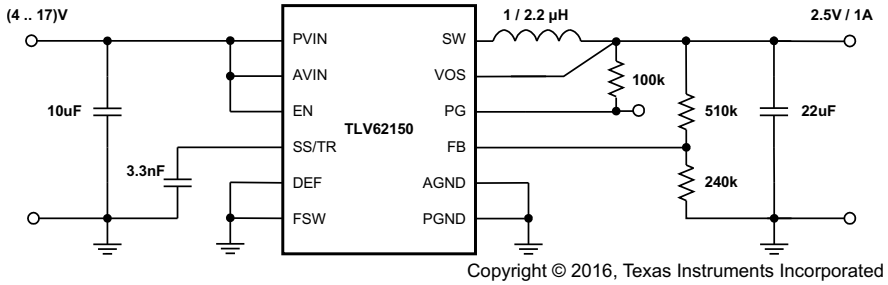

Copyright © 2016, Texas Instruments Incorporated

Figure 41. 2.5-V/1-A Power Supply

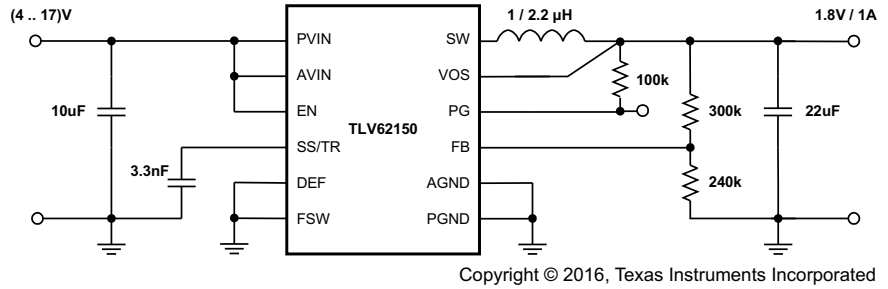

Copyright © 2016, Texas Instruments Incorporated

Figure 42. 1.8-V/1-A Power Supply

Copyright © 2012–2016, Texas Instruments Incorporated

System Examples (continued)

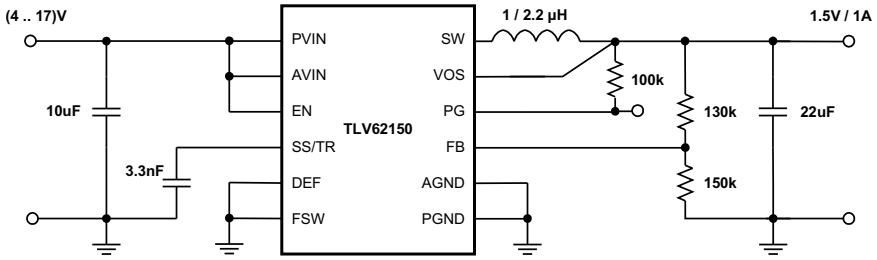

Copyright © 2016, Texas Instruments Incorporated

Figure 43. 1.5-V/1-A Power Supply

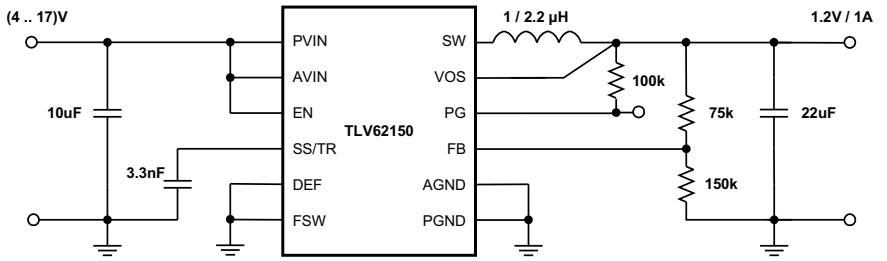

Copyright © 2016, Texas Instruments Incorporated

Figure 44. 1.2-V/1-A Power Supply

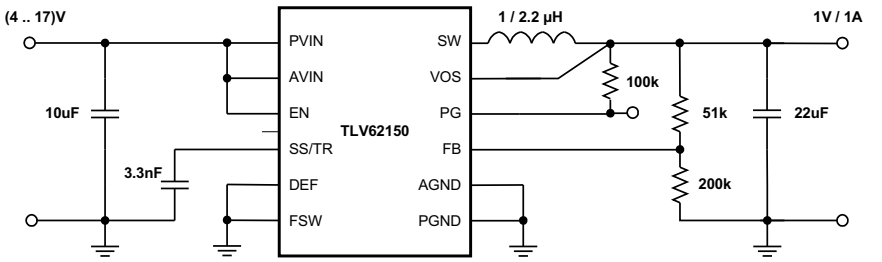

Copyright © 2016, Texas Instruments Incorporated

Figure 45. 1-V/1-A Power Supply

10 Power Supply Recommendations

The TLV6215X are designed to operate from a 4-V to 17-V input voltage supply. The input power supply's output current needs to be rated according to the output voltage and the output current of the power rail application.

11 Layout

11.1 Layout Guidelines

A proper layout is critical for the operation of a switched mode power supply, even more at high switching frequencies. Therefore the PCB layout of the TLV62150 demands careful attention to ensure operation and to get the performance specified. A poor layout can lead to issues like poor regulation (both line and load), stability and accuracy weaknesses, increased EMI radiation and noise sensitivity.

See Figure 46 for the recommended layout of the TLV62150, which is designed for common external ground connections. Therefore both AGND and PGND pins are directly connected to the Exposed Thermal Pad. On the PCB, the direct common ground connection of AGND and PGND to the Exposed Thermal Pad and the system ground (ground plane) is mandatory. Also connect the VOS pin in the shortest way to VOUT at the output capacitor. To avoid noise coupling into the VOS line, this connection should be separated from the VOUT power line/plane as shown in *Layout Example*.

Provide low inductive and resistive paths for loops with high di/dt. Therefore paths conducting the switched load current should be as short and wide as possible. Provide low capacitive paths (with respect to all other nodes) for wires with high dv/dt. Therefore the input and output capacitance should be placed as close as possible to the IC pins and parallel wiring over long distances as well as narrow traces should be avoided. Loops which conduct an alternating current should outline an area as small as possible, as this area is proportional to the energy radiated.

Sensitive nodes like FB and VOS need to be connected with short wires and not nearby high dv/dt signals (e.g. SW). As they carry information about the output voltage, they should be connected as close as possible to the actual output voltage (at the output capacitor). The capacitor on the SS/TR pin and on AVIN as well as the FB resistors, R1 and R2, should be kept close to the IC and connect directly to those pins and the system ground plane.

The Exposed Thermal Pad must be soldered to the circuit board for mechanical reliability and to achieve appropriate power dissipation.

The recommended layout is implemented on the EVM and shown in its Users Guide, SLAU416. Additionally, the EVM Gerber data are available for download here, SLVC394.

11.2 Layout Example

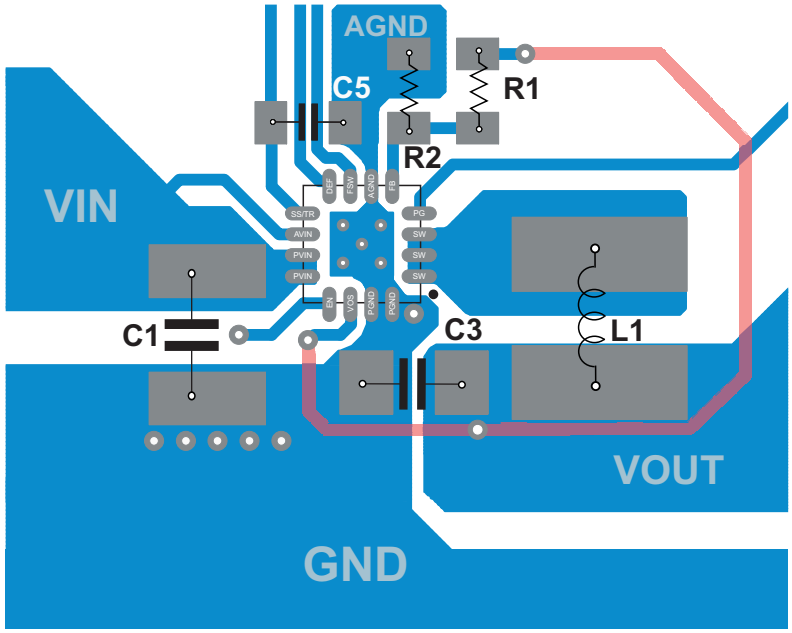

Figure 46. Layout Example Recommendation

Copyright © 2012–2016, Texas Instruments Incorporated

11.3 Thermal Considerations

Implementation of integrated circuits in low-profile and fine-pitch surface-mount packages typically requires special attention to power dissipation. Many system-dependent issues such as thermal coupling, airflow, added heat sinks and convection surfaces, and the presence of other heat-generating components affect the power-dissipation limits of a given component.

Three basic approaches for enhancing thermal performance are listed below:

- Improving the power dissipation capability of the PCB design
- Improving the thermal coupling of the component to the PCB by soldering the Exposed Thermal Pad
- Introducing airflow in the system

For more details on how to use the thermal parameters, see the application notes: thermal characteristics application note (SZZA017), and (SPRA953).

The TLV62150 is designed for a maximum operating junction temperature (T_j) of 125°C. Therefore the maximum output power is limited by the power losses that can be dissipated over the actual thermal resistance, given by the package and the surrounding PCB structures. Since the thermal resistance of the package is fixed, increasing the size of the surrounding copper area and improving the thermal connection to the IC can reduce the thermal resistance. To get an improved thermal behavior, it's recommended to use top layer metal to connect the device with wide and thick metal lines. Internal ground layers can connect to vias directly under the IC for improved thermal performance.

If short circuit or overload conditions are present, the device is protected by limiting internal power dissipation.

版权 © 2012–2016, Texas Instruments Incorporated

12 器件和文档支持

12.1 器件支持

12.1.1 Third-Party Products Disclaimer

TI'S PUBLICATION OF INFORMATION REGARDING THIRD-PARTY PRODUCTS OR SERVICES DOES NOT CONSTITUTE AN ENDORSEMENT REGARDING THE SUITABILITY OF SUCH PRODUCTS OR SERVICES OR A WARRANTY, REPRESENTATION OR ENDORSEMENT OF SUCH PRODUCTS OR SERVICES, EITHER ALONE OR IN COMBINATION WITH ANY TI PRODUCT OR SERVICE.

12.2 相关链接

下面的表格列出了快速访问链接。范围包括技术文档、支持与社区资源、工具和软件，以及样片或购买的快速访问。

表 6. 相关链接

器件	产品文件夹	样片与购买	技术文档	工具与软件	支持与社区
TLV62150	请单击此处	请单击此处	请单击此处	请单击此处	请单击此处
TLV62150A	请单击此处	请单击此处	请单击此处	请单击此处	请单击此处

12.3 文档支持

12.3.1 相关文档

相关文档如下：

- *《TLV62130EVM-505 和 TLV62150EVM-505 评估模块》*，SLAU416
- 《EVM 光绘数据》，SLVC394
- *《采用 JEDEC PCB 设计的线性和逻辑封装散热特性》*，SZZA017
- *《半导体和 IC 封装热指标》*，SPRA953

12.4 接收文档更新通知

如需接收文档更新通知，请访问 www.ti.com.cn 网站上的器件产品文件夹。点击右上角的*提醒我* (Alert me) 注册后，即可每周定期收到已更改的产品信息。有关更改的详细信息，请查阅已修订文档中包含的修订历史记录。

12.5 社区资源

The following links connect to TI community resources. Linked contents are provided "AS IS" by the respective contributors. They do not constitute TI specifications and do not necessarily reflect TI's views; see TI's Terms of Use.

TI E2E™ Online Community ***TI's Engineer-to-Engineer (E2E) Community.*** Created to foster collaboration among engineers. At e2e.ti.com, you can ask questions, share knowledge, explore ideas and help solve problems with fellow engineers.

Design Support ***TI's Design Support*** Quickly find helpful E2E forums along with design support tools and contact information for technical support.

12.6 商标

DCS-Control, E2E are trademarks of Texas Instruments.
All other trademarks are the property of their respective owners.

12.7 静电放电警告

这些装置包含有限的内置 ESD 保护。 存储或装卸时，应将导线一起截短或将装置放置于导电泡棉中，以防止 MOS 门极遭受静电损伤。

版权 © 2012–2016, Texas Instruments Incorporated

12.8 Glossary

SLYZ022 — *TI Glossary*.

This glossary lists and explains terms, acronyms, and definitions.

Copyright © 2012–2016, Texas Instruments Incorporated

13 机械、封装和可订购信息

以下页中包括机械、封装和可订购信息。这些信息是针对指定器件可提供的最新数据。这些数据会在无通知且不对本文档进行修订的情况下发生改变。欲获得该数据表的浏览器版本，请查阅左侧的导航栏。

Copyright © 2012–2016, Texas Instruments Incorporated

PACKAGE OUTLINE

RGT0016C



VQFN - 1 mm max height

PLASTIC QUAD FLATPACK - NO LEAD

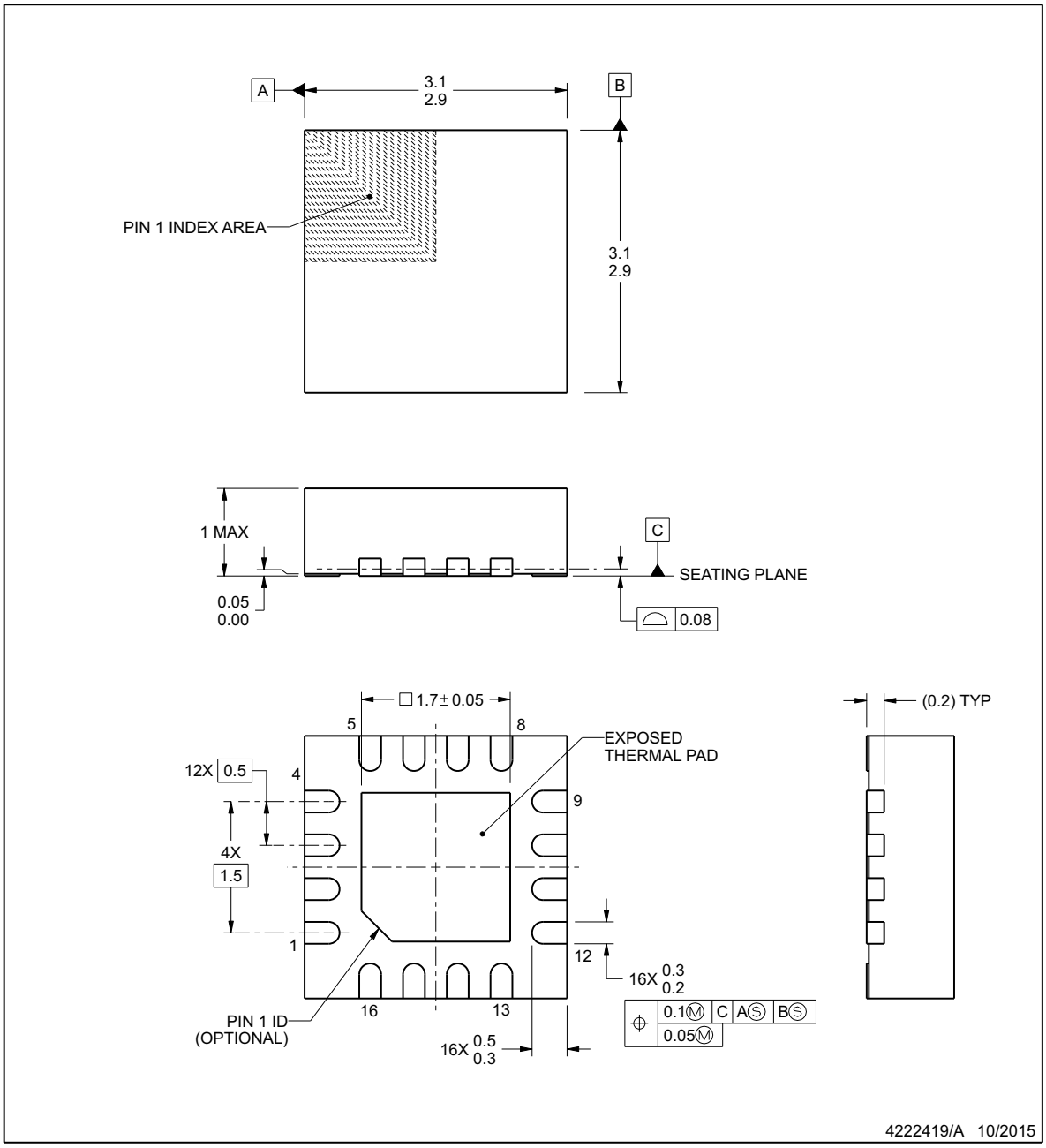

NOTES:

1. All linear dimensions are in millimeters. Any dimensions in parenthesis are for reference only. Dimensioning and tolerancing per ASME Y14.5M.
2. This drawing is subject to change without notice.
3. The package thermal pad must be soldered to the printed circuit board for thermal and mechanical performance.

Copyright © 2012–2016, Texas Instruments Incorporated

EXAMPLE BOARD LAYOUT

RGT0016C — **VQFN - 1 mm max height**

PLASTIC QUAD FLATPACK - NO LEAD

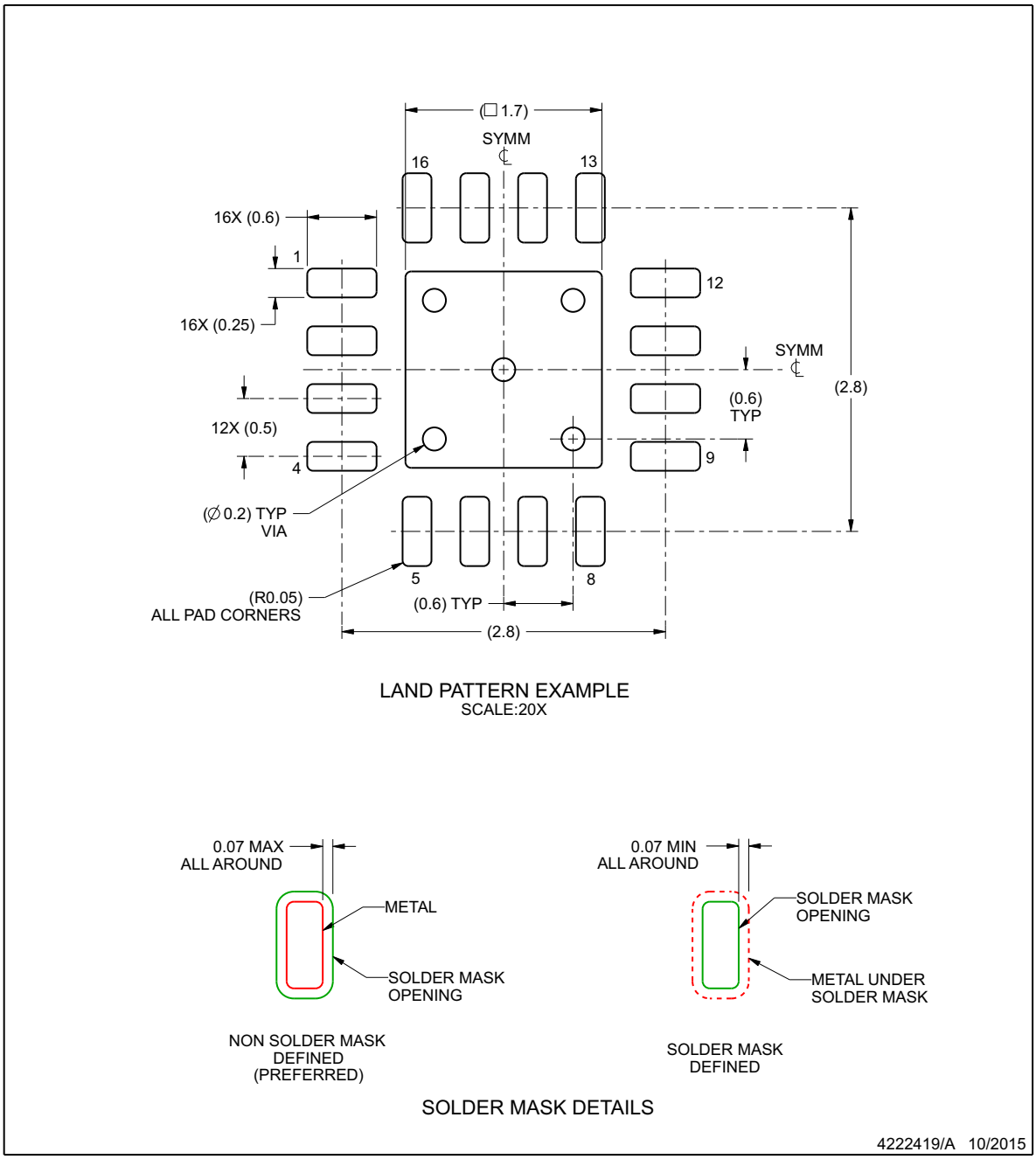

NOTES: (continued)

4. This package is designed to be soldered to a thermal pad on the board. For more information, see Texas Instruments literature number SLUA271 (www.ti.com/lit/slua271).

Copyright © 2012–2016, Texas Instruments Incorporated

EXAMPLE STENCIL DESIGN

RGT0016C — **VQFN - 1 mm max height**

PLASTIC QUAD FLATPACK - NO LEAD

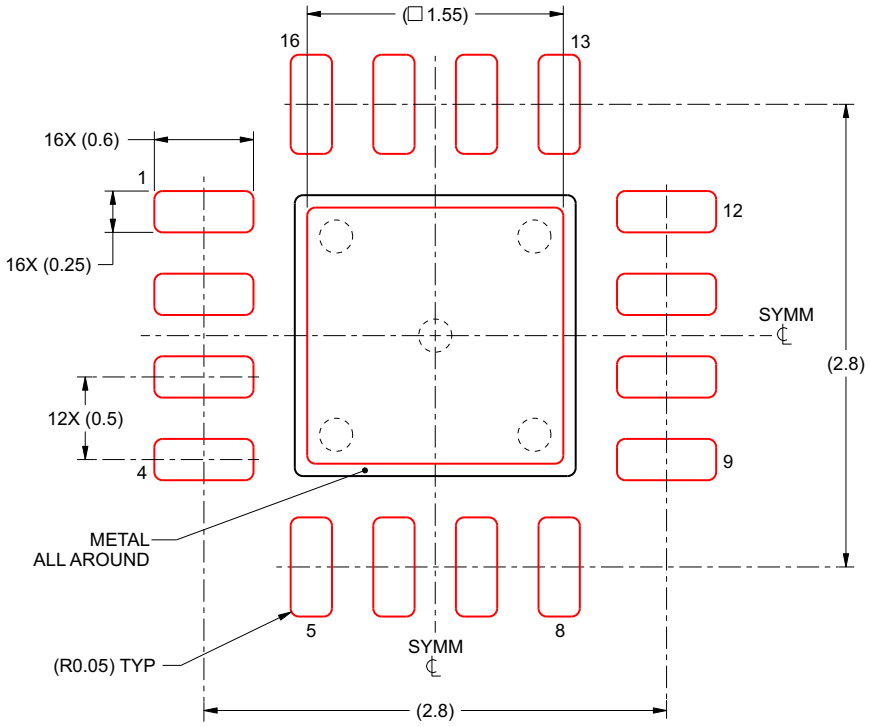

SOLDER PASTE EXAMPLE
BASED ON 0.125 mm THICK STENCIL

EXPOSED PAD
83% PRINTED SOLDER COVERAGE BY AREA
SCALE:25X

4222419/A 10/2015

NOTES: (continued)

5. Laser cutting apertures with trapezoidal walls and rounded corners may offer better paste release. IPC-7525 may have alternate design recommendations.

版权 © 2012–2016, Texas Instruments Incorporated

PACKAGING INFORMATION

Orderable part number	Status (1)	Material type (2)	Package | Pins	Package qty | Carrier	RoHS (3)	Lead finish/ Ball material (4)	MSL rating/ Peak reflow (5)	Op temp (°C)	Part marking (6)
TLV62150ARGTR	Active	Production	VQFN (RGT) | 16	3000 | LARGE T&R	Yes	NIPDAU	Level-1-260C-UNLIM	-40 to 85	VUOI
TLV62150ARGTR.A	Active	Production	VQFN (RGT) | 16	3000 | LARGE T&R	Yes	NIPDAU	Level-1-260C-UNLIM	-40 to 85	VUOI
TLV62150ARGTR.B	Active	Production	VQFN (RGT) | 16	3000 | LARGE T&R	Yes	NIPDAU	Level-1-260C-UNLIM	-40 to 85	VUOI
TLV62150ARGTRG4	Active	Production	VQFN (RGT) | 16	3000 | LARGE T&R	Yes	NIPDAU	Level-1-260C-UNLIM	-40 to 85	VUOI
TLV62150ARGTRG4.A	Active	Production	VQFN (RGT) | 16	3000 | LARGE T&R	Yes	NIPDAU	Level-1-260C-UNLIM	-40 to 85	VUOI
TLV62150ARGTRG4.B	Active	Production	VQFN (RGT) | 16	3000 | LARGE T&R	Yes	NIPDAU	Level-1-260C-UNLIM	-40 to 85	VUOI
TLV62150ARGTT	Active	Production	VQFN (RGT) | 16	250 | SMALL T&R	Yes	NIPDAU	Level-2-260C-1 YEAR	-40 to 85	VUOI
TLV62150ARGTT.A	Active	Production	VQFN (RGT) | 16	250 | SMALL T&R	Yes	NIPDAU	Level-2-260C-1 YEAR	-40 to 85	VUOI
TLV62150ARGTT.B	Active	Production	VQFN (RGT) | 16	250 | SMALL T&R	Yes	NIPDAU	Level-2-260C-1 YEAR	-40 to 85	VUOI
TLV62150RGTR	Active	Production	VQFN (RGT) | 16	3000 | LARGE T&R	Yes	NIPDAU	Level-1-260C-UNLIM	-40 to 85	VUCI
TLV62150RGTR.A	Active	Production	VQFN (RGT) | 16	3000 | LARGE T&R	Yes	NIPDAU	Level-1-260C-UNLIM	-40 to 85	VUCI
TLV62150RGTR.B	Active	Production	VQFN (RGT) | 16	3000 | LARGE T&R	Yes	NIPDAU	Level-1-260C-UNLIM	-40 to 85	VUCI
TLV62150RGTRG4	Active	Production	VQFN (RGT) | 16	3000 | LARGE T&R	Yes	NIPDAU	Level-2-260C-1 YEAR	-40 to 85	VUCI
TLV62150RGTRG4.A	Active	Production	VQFN (RGT) | 16	3000 | LARGE T&R	Yes	NIPDAU	Level-2-260C-1 YEAR	-40 to 85	VUCI
TLV62150RGTRG4.B	Active	Production	VQFN (RGT) | 16	3000 | LARGE T&R	Yes	NIPDAU	Level-2-260C-1 YEAR	-40 to 85	VUCI
TLV62150RGTT	Active	Production	VQFN (RGT) | 16	250 | SMALL T&R	Yes	NIPDAU	Level-1-260C-UNLIM	-40 to 85	VUCI
TLV62150RGTT.A	Active	Production	VQFN (RGT) | 16	250 | SMALL T&R	Yes	NIPDAU	Level-1-260C-UNLIM	-40 to 85	VUCI
TLV62150RGTT.B	Active	Production	VQFN (RGT) | 16	250 | SMALL T&R	Yes	NIPDAU	Level-1-260C-UNLIM	-40 to 85	VUCI

(1) **Status:** For more details on status, see our product life cycle.

(2) **Material type:** When designated, preproduction parts are prototypes/experimental devices, and are not yet approved or released for full production. Testing and final process, including without limitation quality assurance, reliability performance testing, and/or process qualification, may not yet be complete, and this item is subject to further changes or possible discontinuation. If available for ordering, purchases will be subject to an additional waiver at checkout, and are intended for early internal evaluation purposes only. These items are sold without warranties of any kind.

(3) **RoHS values:** Yes, No, RoHS Exempt. See the TI RoHS Statement for additional information and value definition.

(4) **Lead finish/Ball material:** Parts may have multiple material finish options. Finish options are separated by a vertical ruled line. Lead finish/Ball material values may wrap to two lines if the finish value exceeds the maximum column width.

(5) **MSL rating/Peak reflow:** The moisture sensitivity level ratings and peak solder (reflow) temperatures. In the event that a part has multiple moisture sensitivity ratings, only the lowest level per JEDEC standards is shown. Refer to the shipping label for the actual reflow temperature that will be used to mount the part to the printed circuit board.

(6) **Part marking:** There may be an additional marking, which relates to the logo, the lot trace code information, or the environmental category of the part.

Multiple part markings will be inside parentheses. Only one part marking contained in parentheses and separated by a "~" will appear on a part. If a line is indented then it is a continuation of the previous line and the two combined represent the entire part marking for that device.

Important Information and Disclaimer: The information provided on this page represents TI's knowledge and belief as of the date that it is provided. TI bases its knowledge and belief on information provided by third parties, and makes no representation or warranty as to the accuracy of such information. Efforts are underway to better integrate information from third parties. TI has taken and continues to take reasonable steps to provide representative and accurate information but may not have conducted destructive testing or chemical analysis on incoming materials and chemicals. TI and TI suppliers consider certain information to be proprietary, and thus CAS numbers and other limited information may not be available for release.

In no event shall TI's liability arising out of such information exceed the total purchase price of the TI part(s) at issue in this document sold by TI to Customer on an annual basis.

TAPE AND REEL INFORMATION

REEL DIMENSIONS

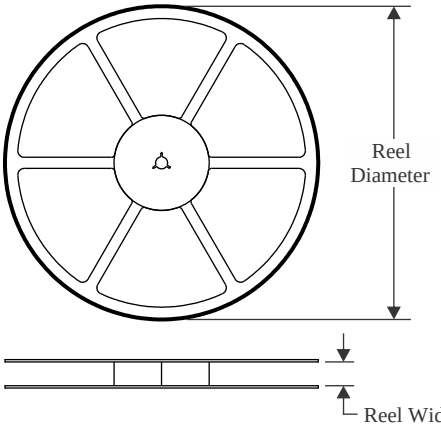

TAPE DIMENSIONS

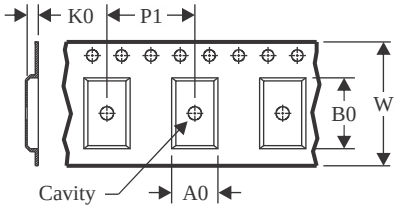

A0	Dimension designed to accommodate the component width
B0	Dimension designed to accommodate the component length
K0	Dimension designed to accommodate the component thickness
W	Overall width of the carrier tape
P1	Pitch between successive cavity centers

QUADRANT ASSIGNMENTS FOR PIN 1 ORIENTATION IN TAPE

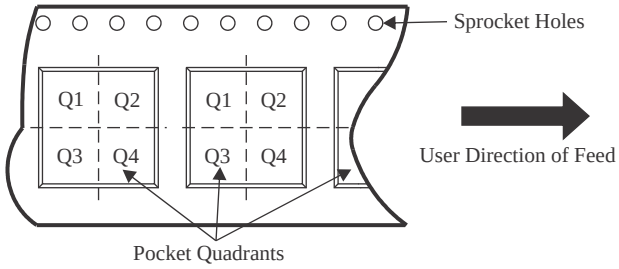

*All dimensions are nominal

Device	Package Type	Package Drawing	Pins	SPQ	Reel Diameter (mm)	Reel Width W1 (mm)	A0 (mm)	B0 (mm)	K0 (mm)	P1 (mm)	W (mm)	Pin1 Quadrant
TLV62150ARGTR	VQFN	RGT	16	3000	330.0	12.4	3.3	3.3	1.0	8.0	12.0	Q2
TLV62150ARGTRG4	VQFN	RGT	16	3000	330.0	12.4	3.3	3.3	1.1	8.0	12.0	Q2
TLV62150ARGTT	VQFN	RGT	16	250	180.0	12.4	3.3	3.3	1.1	8.0	12.0	Q2
TLV62150RGTR	VQFN	RGT	16	3000	330.0	12.4	3.3	3.3	1.1	8.0	12.0	Q2
TLV62150RGTR	VQFN	RGT	16	3000	330.0	12.4	3.3	3.3	1.1	8.0	12.0	Q2
TLV62150RGTRG4	VQFN	RGT	16	3000	330.0	12.4	3.3	3.3	1.1	8.0	12.0	Q2
TLV62150RGTT	VQFN	RGT	16	250	180.0	12.4	3.3	3.3	1.1	8.0	12.0	Q2

TAPE AND REEL BOX DIMENSIONS

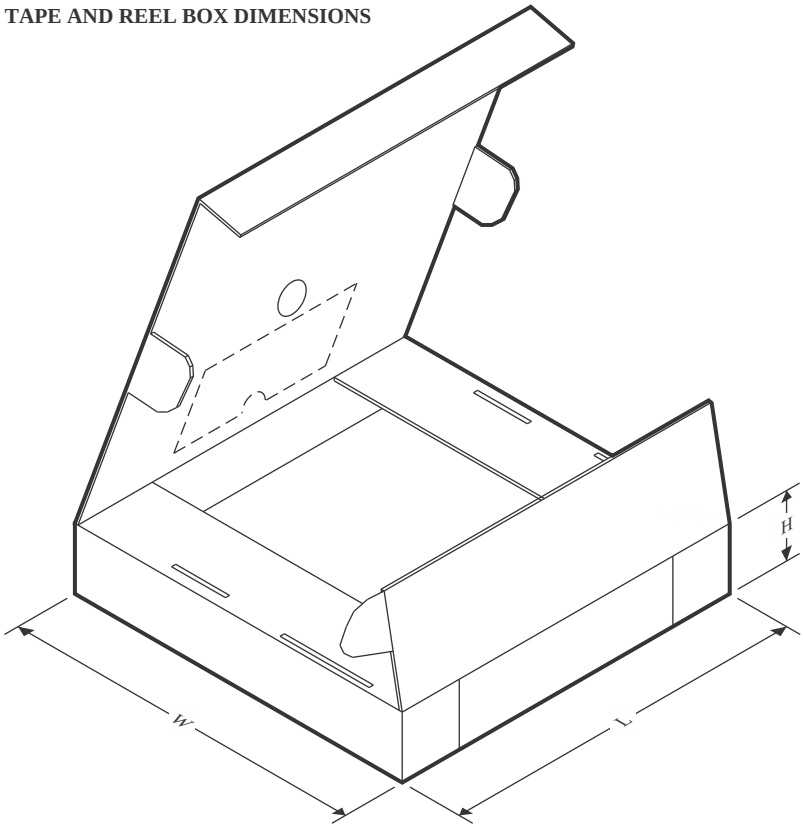

*All dimensions are nominal

Device	Package Type	Package Drawing	Pins	SPQ	Length (mm)	Width (mm)	Height (mm)
TLV62150ARGTR	VQFN	RGT	16	3000	353.0	353.0	32.0
TLV62150ARGTRG4	VQFN	RGT	16	3000	346.0	346.0	33.0
TLV62150ARGTT	VQFN	RGT	16	250	182.0	182.0	20.0
TLV62150RGTR	VQFN	RGT	16	3000	552.0	346.0	36.0
TLV62150RGTR	VQFN	RGT	16	3000	360.0	360.0	36.0
TLV62150RGTRG4	VQFN	RGT	16	3000	552.0	346.0	36.0
TLV62150RGTT	VQFN	RGT	16	250	552.0	182.0	36.0

TUBE

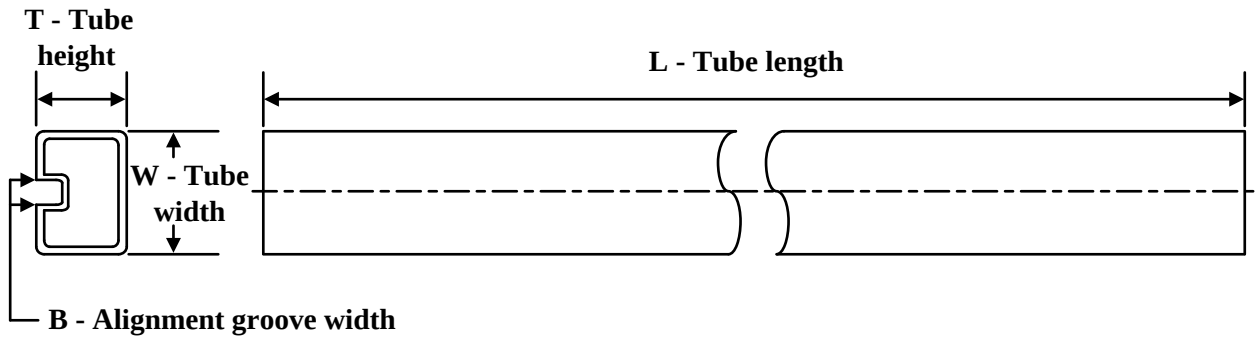

*All dimensions are nominal

Device	Package Name	Package Type	Pins	SPQ	L (mm)	W (mm)	T (µm)	B (mm)
TLV62150RGTR	RGT	VQFN	16	3000	381	4.83	2286	0
TLV62150RGTR.A	RGT	VQFN	16	3000	381	4.83	2286	0
TLV62150RGTR.B	RGT	VQFN	16	3000	381	4.83	2286	0
TLV62150RGTRG4	RGT	VQFN	16	3000	381	4.83	2286	0
TLV62150RGTRG4.A	RGT	VQFN	16	3000	381	4.83	2286	0
TLV62150RGTRG4.B	RGT	VQFN	16	3000	381	4.83	2286	0
TLV62150RGTT	RGT	VQFN	16	250	381	4.83	2286	0
TLV62150RGTT.A	RGT	VQFN	16	250	381	4.83	2286	0
TLV62150RGTT.B	RGT	VQFN	16	250	381	4.83	2286	0

重要通知和免责声明

TI“按原样”提供技术和可靠性数据（包括数据表）、设计资源（包括参考设计）、应用或其他设计建议、网络工具、安全信息和其他资源，不保证没有瑕疵且不做出任何明示或暗示的担保，包括但不限于对适销性、与某特定用途的适用性或不侵犯任何第三方知识产权的暗示担保。

这些资源可供使用 TI 产品进行设计的熟练开发人员使用。您将自行承担以下全部责任：(1) 针对您的应用选择合适的 TI 产品，(2) 设计、验证并测试您的应用，(3) 确保您的应用满足相应标准以及任何其他安全、安保法规或其他要求。

这些资源如有变更，恕不另行通知。TI 授权您仅可将这些资源用于研发本资源所述的 TI 产品的相关应用。严禁以其他方式对这些资源进行复制或展示。您无权使用任何其他 TI 知识产权或任何第三方知识产权。对于因您对这些资源的使用而对 TI 及其代表造成的任何索赔、损害、成本、损失和债务，您将全额赔偿，TI 对此概不负责。

TI 提供的产品受 TI 销售条款)、TI 通用质量指南 或 ti.com 上其他适用条款或 TI 产品随附的其他适用条款的约束。TI 提供这些资源并不会扩展或以其他方式更改 TI 针对 TI 产品发布的适用的担保或担保免责声明。 除非德州仪器 (TI) 明确将某产品指定为定制产品或客户特定产品，否则其产品均为按确定价格收入目录的标准通用器件。

TI 反对并拒绝您可能提出的任何其他或不同的条款。

版权所有 © 2026，德州仪器 (TI) 公司

最后更新日期：2025 年 10 月