AFE4400 集成模拟前端，用于心率监视器和低成本脉冲血氧计

1 特性

- 完全集成 模拟前端，用于脉冲血氧仪 应用范围：
  - 灵活的脉冲排序和定时控制
- 发射：
  - 集成发光二极管 (LED) 驱动器（H 桥、推挽）
  - 动态范围：95dB
  - LED 电流：
    - 可编程至具有 8 位电流分辨率的 50mA 电流
  - 低功耗：
    - 100µA + 平均 LED 电流
  - 可编程 LED 接通时间
  - 独立的 LED2 和 LED1 电流基准
- 具有高动态范围的接收通道：
  - 13 个无噪声位
  - 低功率：在使用 3.3V 电源供电时小于 670µA
  - 集成数字环境估算和删减
  - 灵活的接收采样时间
  - 具有可编程 LED 设置的灵活转阻放大器
- 集成式故障诊断：
  - 光电二极管和 LED 开路与短路检测
  - 线缆接通和断开检测
- 电源：
  - Rx = 2.0V 至 3.6V
  - Tx = 3.0V 至 5.25V
- 封装：紧凑型超薄四方扁平无引线 (VQFN)-40 (6mm x 6mm)
- 额定温度范围： 0°C 至 70°C

2 应用

- 低成本 医疗脉冲血氧仪应用
- 光学心率监视器 (HRM)
- 工业光测量应用

3 说明

AFE4400 是一款非常适合于脉冲血氧仪应用的完全集成模拟前端 (AFE)。 此器件包含一个具有集成模数转换器 (ADC) 的低噪声接收器通道、一个 LED 发射部件和针对传感器以及 LED 故障检测的诊断功能。 此器件是一款可配置定时控制器。 这个灵活性使得用户能够完全控制器件定时特性。 为了简化计时要求并为 AFE4400 提供一个低抖动时钟，还集成了一个由外部晶振供频的振荡器。 此器件使用一个 SPI™ 接口与外部微控制器或主机处理器通信。

此器件是一个单体、紧凑型 VQFN-40 封装 (6mm x 6mm) 内的完整 AFE 解决方案，其额定工作温度范围为 0°C 至 70°C。

器件信息(1)

部件号	封装	封装尺寸（标称值）
AFE4400	VQFN (40)	6.00mm x 6.00mm

(1) 如需了解所有可用封装，请见数据表末尾的可订购产品附录。

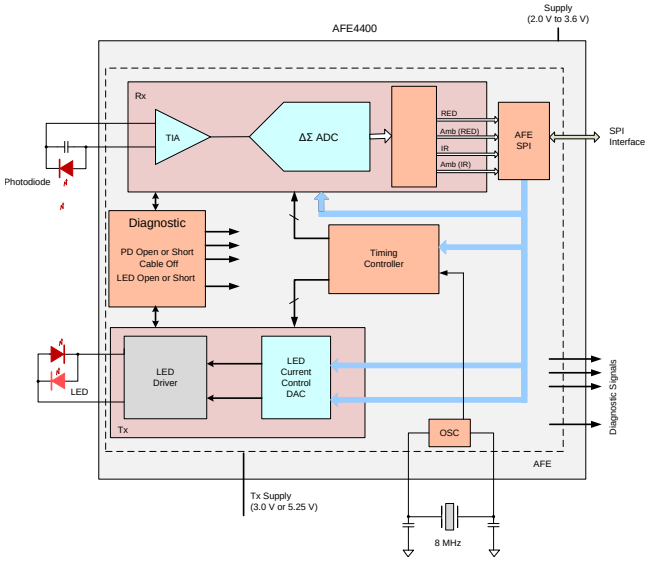

目录

1 特性 ... 1
2 应用 ... 1
3 说明 ... 1
4 修订历史记录 ... 2
5 **Device Family Options** ... 5
6 **Pin Configuration and Functions** ... 5
7 **Specifications** ... 7
7.1 Absolute Maximum Ratings ... 7
7.2 Handling Ratings ... 7
7.3 Recommended Operating Conditions ... 8
7.4 Thermal Information ... 8
7.5 Electrical Characteristics ... 9
7.6 Timing Requirements ... 13
7.7 Timing Requirements: Supply Ramp and Power-Down ... 14
7.8 Typical Characteristics ... 16
8 **Detailed Description** ... 21
8.1 Overview ... 21
8.2 Functional Block Diagram ... 21
8.3 Feature Description ... 22
8.4 Device Functional Modes ... 38
8.5 Programming ... 44
8.6 Register Maps ... 49
9 **Applications and Implementation** ... 72
9.1 Application Information ... 72
9.2 Typical Application ... 72
10 **Power Supply Recommendations** ... 76
11 **Layout** ... 78
11.1 Layout Guidelines ... 78
11.2 Layout Example ... 78
12 器件和文档支持 ... 79
12.1 Trademarks ... 79
12.2 Electrostatic Discharge Caution ... 79
12.3 术语表 ... 79
13 机械封装和可订购信息 ... 79

4 修订历史记录

NOTE: Page numbers for previous revisions may differ from page numbers in the current version.

Changes from Revision G (July 2014) to Revision H **Page**

- Changed HBM value from ±4000 to ±1000 in Handling Ratings table ... 7
- Changed CDM value from ±1500 to ±250 in Handling Ratings table ... 7

Changes from Revision F (October 2013) to Revision G **Page**

- 已将格式更改为符合最新的数据表标准；已添加全新章节，并已删除现有章节 ... 1
- 已更改 *发射* 特性着重号的子着重号 ... 1
- 已更改 *集成故障诊断* 特性着重号的第二子着重号 ... 1
- Added AFE4403 row to *Family and Ordering Information* table ... 5
- Changed title of Device Family Options table ... 5
- Changed INM to INN in VCM description of Pin Descriptions table ... 6
- Changed Absolute Maximum Ratings table: changed first five rows and added TXP, TXN pins row ... 7
- Deleted Typical value (> 1.3) for Logic high input voltage ... 11
- Deleted Typical value (> -0.4) for Logic low input voltage ... 11
- Changed SPISTE, SPISIMO, and SPISOMI pin names in Figure 1 ... 13
- Changed SPISTE and SPISIMO pin names in Figure 2 ... 14
- Added second and third paragraphs to the *Receiver Front-End* section ... 22
- Changed seventh paragraph in *Receiver Front-End* section ... 23
- Changed title of *Ambient Cancellation Scheme and Second Stage Gain Block* section ... 24
- Changed descriptions of LED2, ambient, and LED1 convert phases in *Receiver Control Signals* section ... 26
- Changed description of *Receiver Timing* section ... 26
- Changed Example column values for rows t_2, t_4, t_5, t_{11}, t_{13}, t_{15}, t_{17}, t_{19}, t_{22}, t_{24}, t_{26}, and t_{28} in Table 2 ... 31
- Added footnote 2 to Table 2 ... 31
- Added footnote 2 to Figure 42 ... 32
- Added footnote 2 to Figure 43 ... 33

版权 © 2012–2014, Texas Instruments Incorporated

- Changed the *ADC Operation and Averaging Module* section: grammatical edits and changed the second sentence of the second paragraph ... 38
- Changed INN pin name in Figure 53 ... 41
- Changed INM to INN in Table 5 ... 43
- Changed SPISTE, SPISIMO, SPISOMI, and SCLK pin names in Figure 58 ... 47
- Added *Application and Implementation* section ... 72

Changes from Revision E (October 2013) to Revision F **Page**

- Changed footnote 1 in Recommended Operating Conditions table ... 8
- Changed LED_DRV_SUP parameter in Recommended Operating Conditions table ... 8
- Changed *TXM* to *TXN* in V_{LED} footnote of Recommended Operating Conditions table ... 8
- Changed Transmitter, *Voltage on TXP (or TXN) pin* parameter in Electrical Characteristics table ... 10
- Changed Figure 54 (changed TXP and TXN pin names, deleted LED 1 and LED 2 pin names) ... 42

Changes from Revision D (May 2013) to Revision E **Page**

- 已删除 芯片图 ... 1
- 已更改 第 3 特性着重号的第 1 个子着重号 ... 1
- 已更改 电源特性着重号的最后一个子着重号 ... 1
- 已更新首页图形 ... 1
- Changed Tx Power Supply column in Family and Ordering Information table ... 5
- Changed *TX_REF* description in Pin Descriptions table ... 6
- Changed *TX_CTRL_SUP* value in Recommended Operating Conditions table ... 8
- Changed conditions for Electrical Characteristics table ... 9
- Changed Performance, *PRF* parameter minimum specification in Electrical Characteristics table ... 9
- Deleted Performance, I_{IN_FS} parameter from Electrical Characteristics table ... 9
- Changed Performance, *CMRR* parameter in Electrical Characteristics table ... 9
- Changed Performance (Full-Signal Chain), *Total integrated noise current* and N_{FB} parameter test conditions in Electrical Characteristics table ... 9
- Changed Receiver Functional Block Level Specification, *Total integrated noise current* parameter test conditions in Electrical Characteristics table ... 9
- Changed Ambient Cancellation Stage, *Gain* parameter in Electrical Characteristics table ... 10
- Added Low-Pass Filter, *Filter settling time* parameter to Electrical Characteristics table ... 10
- Changed Diagnostics, *Duration of diagnostics state machine* parameter unit value in Electrical Characteristics table ... 10
- Changed External Clock, *Maximum allowable external clock jitter* parameter in Electrical Characteristics table ... 11
- Updated Figure 8 to Figure 10 ... 16
- Updated Figure 11 to Figure 16 ... 16
- Updated Figure 17 to Figure 19 ... 17
- Updated Figure 31 and Figure 32 ... 19
- Updated functional block diagram ... 21
- Updated Figure 34 ... 22
- Changed second sentence in second paragraph of *Receiver Front-End* section ... 22
- Changed third paragraph of *Receiver Front-End* section ... 23
- Changed second paragraph of *Ambient Cancellation Scheme* section ... 25
- Added last paragraph and Table 1 to *Ambient Cancellation Scheme* section ... 26
- Updated Figure 37 ... 27
- Updated Figure 39 ... 29

版权 © 2012–2014, Texas Instruments Incorporated

- Added footnote 1 to Table 2 31
- Changed example column in Table 2 31
- Added last sentence to third column of row t_{13} in Table 2 31
- Deleted last sentence from third column of row t_{14} in Table 2 31
- Changed corresponding register address name in row t_{21} of Table 2 31
- Updated Figure 42 32
- Updated Figure 43 33
- Updated Figure 44 34
- Changed entire *Transmit Section* 34
- Changed second paragraph of the *ADC Operation and Averaging Module* section 38
- Updated Figure 49 38
- Changed *Operation* section title and first sentence 39
- Changed last sentence of the *Operation With Averaging* section 39
- Updated Figure 52 40
- Changed last paragraph of *Diagnostics Module* section 44
- Added first and last sentence to *Writing Data* section 44
- Changed second to last sentence in *Writing Data* section 44
- Added first and last sentence to *Reading Data* section 46
- Changed second to last sentence in *Reading Data* section 46
- Added *Multiple Data Reads and Writes* section 47
- Added last sentence to the *AFE SPI Interface Design Considerations* section 48
- Added Register Control column to Table 6 49
- Changed name of ADCRSTSTCT0 register (address 15h) in Table 6 49
- Changed bit D10 in CONTROL2 row of Table 6 50
- Changed CONTROL0 paragraph description 52
- Added note to bit D2 description of CONTROL0 register 52
- Corrected bit names in ADCRSTSTCT0 register 59
- Changed PRPCOUNT[15:0] (bits D[15:0]) description of PRPCOUNT register 62
- Changed note within CLKALMPIN[2:0] (bits D[11:9]) description of CONTROL1 register 62
- Changed second and third columns of Table 7 62
- Changed *001* and *011* bit settings for the STG2GAIN[2:0] bits (bits D[10:8]) in the TIA_AMB_GAIN register 64
- Changed bit D10 of the CONTROL2 register 66

Copyright © 2012–2014, Texas Instruments Incorporated

5 Device Family Options

PRODUCT	PACKAGE-LEAD	LED DRIVE CONFIGURATION	LED DRIVE CURRENT (mA, max)	Tx POWER SUPPLY (V)	OPERATING TEMPERATURE RANGE
AFE4400	VQFN-40	Bridge, push-pull	50	3 to 5.25	0°C to 70°C
AFE4490	VQFN-40	Bridge, push-pull	50, 75, 100, 150, and 200	3 to 5.25	–40°C to 85°C
AFE4403	DSBGA-36	Bridge, push-pull	25, 50, 75, and 100	3 to 5.25	–20°C to 70°C

6 Pin Configuration and Functions

RHA Package
VQFN-40
(Top View)

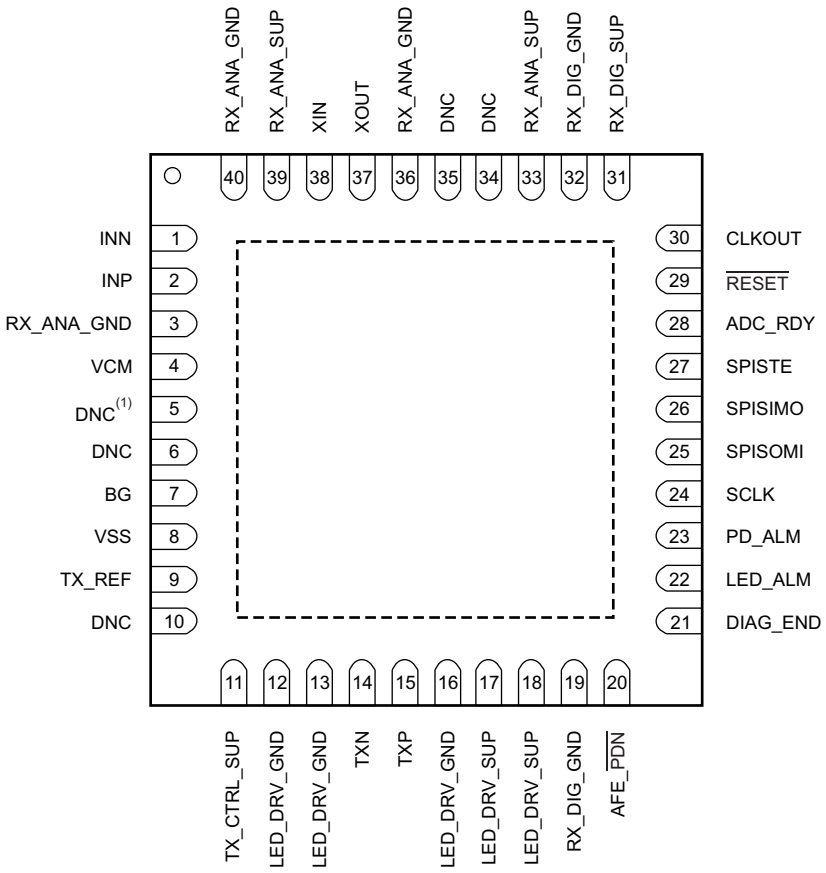

(1) DNC = Do not connect.

Copyright © 2012–2014, Texas Instruments Incorporated

Pin Functions

PIN		FUNCTION	DESCRIPTION
NAME	NO.		
ADC_RDY	28	Digital	Output signal that indicates ADC conversion completion. Can be connected to the interrupt input pin of an external microcontroller.
AFE_$\overline{PDN}$	20	Digital	AFE-only power-down input; active low. Can be connected to the port pin of an external microcontroller.
BG	7	Reference	Decoupling capacitor for internal band-gap voltage to ground. (2.2-µF decoupling capacitor to ground)
CLKOUT	30	Digital	Buffered 4-MHz output clock output. Can be connected to the clock input pin of an external microcontroller.
DIAG_END	21	Digital	Output signal that indicates completion of diagnostics. Can be connected to the port pin of an external microcontroller.
DNC(1)	5, 6, 10, 34, 35	—	Do not connect these pins. Leave as open circuit.
INN	1	Analog	Receiver input pin. Connect to photodiode anode.
INP	2	Analog	Receiver input pin. Connect to photodiode cathode.
LED_DRV_GND	12, 13, 16	Supply	LED driver ground pin, H-bridge. Connect to common board ground.
LED_DRV_SUP	17, 18	Supply	LED driver supply pin, H-bridge. Connect to an external power supply capable of supplying the large LED current, which is drawn by this supply pin.
LED_ALM	22	Digital	Output signal that indicates an LED cable fault. Can be connected to the port pin of an external microcontroller.
PD_ALM	23	Digital	Output signal that indicates a PD sensor or cable fault. Can be connected to the port pin of an external microcontroller.
$\overline{RESET}$	29	Digital	AFE-only reset input, active low. Can be connected to the port pin of an external microcontroller.
RX_ANA_GND	3, 36, 40	Supply	Rx analog ground pin. Connect to common board ground.
RX_ANA_SUP	33, 39	Supply	Rx analog supply pin; 0.1-µF decoupling capacitor to ground
RX_DIG_GND	19, 32	Supply	Rx digital ground pin. Connect to common board ground.
RX_DIG_SUP	31	Supply	Rx digital supply pin; 0.1-µF decoupling capacitor to ground
SCLK	24	SPI	SPI clock pin
SPISIMO	26	SPI	SPI serial in master out
SPISOMI	25	SPI	SPI serial out master in
SPISTE	27	SPI	SPI serial interface enable
TX_CTRL_SUP	11	Supply	Transmit control supply pin (0.1-µF decoupling capacitor to ground)
TX_REF	9	Reference	Transmitter reference voltage, 0.75 V default after reset. Connect a 2.2-µF decoupling capacitor to ground.
TXN	14	Analog	LED driver out B, H-bridge output. Connect to LED.
TXP	15	Analog	LED driver out B, H-bridge output. Connect to LED.
VCM	4	Reference	Input common-mode voltage output. Connect a series resistor (1 kΩ) and a decoupling capacitor (10 nF) to ground. The voltage across the capacitor can be used to shield (guard) the INP, INN traces.
VSS	8	Supply	Substrate ground. Connect to common board ground.
XOUT	37	Digital	Crystal oscillator pins. Connect an external 8-MHz crystal between these pins with the correct load capacitor (as specified by vendor) to ground.
XIN	38	Digital	Crystal oscillator pins. Connect an external 8-MHz crystal between these pins with the correct load capacitor (as specified by vendor) to ground.

(1) Leave pins as open circuit. Do not connect.

Copyright © 2012–2014, Texas Instruments Incorporated

7 Specifications

7.1 Absolute Maximum Ratings

over operating free-air temperature range (unless otherwise noted)(1)

		MIN	MAX	UNIT
RX_ANA_SUP, RX_DIG_SUP to RX_ANA_GND, RX_DIG_GND		–0.3	4	V
TX_CTRL_SUP, LED_DRV_SUP to LED_DRV_GND		–0.3	6	V
RX_ANA_GND, RX_DIG_GND to LED_DRV_GND		–0.3	0.3	V
Analog inputs		RX_ANA_GND – 0.3	RX_ANA_SUP + 0.3	V
Digital inputs		RX_DIG_GND – 0.3	RX_DIG_SUP + 0.3	V
TXP, TXN pins		–0.3	Minimum [6, (LED_DRV_SUP + 0.3)]	V
Input current to any pin except supply pins(2)			±7	mA
Input current	Momentary		±50	mA
	Continuous		±7	mA
Operating temperature range		0	70	°C
Maximum junction temperature, T_J			125	°C

(1) Stresses beyond those listed under *Absolute Maximum Ratings* may cause permanent damage to the device. These are stress ratings only, which do not imply functional operation of the device at these or any other conditions beyond those indicated under *Recommended Operating Conditions*. Exposure to absolute-maximum-rated conditions for extended periods may affect device reliability.
(2) Input terminals are diode-clamped to the power-supply rails. Input signals that can swing beyond the supply rails must be current-limited to 10 mA or less.

7.2 Handling Ratings

			MIN	MAX	UNIT
T_{stg}	Storage temperature range		–60	150	°C
$V_{(ESD)}$	Electrostatic discharge	Human body model (HBM), per ANSI/ESDA/JEDEC JS-001, all pins(1)	–1000	1000	V
		Charged device model (CDM), per JEDEC specification JESD22-C101, all pins(2)	–250	250	

(1) JEDEC document JEP155 states that 500-V HBM allows safe manufacturing with a standard ESD control process.
(2) JEDEC document JEP157 states that 250-V CDM allows safe manufacturing with a standard ESD control process.

Copyright © 2012–2014, Texas Instruments Incorporated

7.3 Recommended Operating Conditions

over operating free-air temperature range (unless otherwise noted)

PARAMETER			MIN	MAX	UNIT
SUPPLIES					
RX_ANA_SUP	AFE analog supply		2.0	3.6	V
RX_DIG_SUP	AFE digital supply		2.0	3.6	V
TX_CTRL_SUP	Transmit controller supply		3.0	5.25	V
LED_DRV_SUP	Transmit LED driver supply	H-bridge or common anode configuration	[3.0 or (1.0 + V_{LED} + V_{CABLE})(1)(2), whichever is greater]	5.25	V
	Difference between LED_DRV_SUP and TX_CTRL_SUP		–0.3	0.3	V
TEMPERATURE					
	Specified temperature range		0	70	°C
	Storage temperature range		–60	150	°C

(1) V_{LED} refers to the maximum voltage drop across the external LED (at maximum LED current) connected between the TXP and TXN pins (in H-bridge mode) and from the TXP and TXN pins to LED_DRV_SUP (in the common anode configuration).
(2) V_{CABLE} refers to voltage drop across any cable, connector, or any other component in series with the LED.

7.4 Thermal Information

THERMAL METRIC(1)		AFE4400 RHA (VQFN) 40 PINS	UNIT
$R_{\theta JA}$	Junction-to-ambient thermal resistance	35	°C/W
$R_{\theta JC(top)}$	Junction-to-case (top) thermal resistance	31	
$R_{\theta JB}$	Junction-to-board thermal resistance	26	
ψ_{JT}	Junction-to-top characterization parameter	0.1	
ψ_{JB}	Junction-to-board characterization parameter	n/a	
$R_{\theta JC(bot)}$	Junction-to-case (bottom) thermal resistance	n/a	

(1) For more information about traditional and new thermal metrics, see the *IC Package Thermal Metrics* application report, SPRA953.

Copyright © 2012–2014, Texas Instruments Incorporated

7.5 Electrical Characteristics

Minimum and maximum specifications are at T_A = 0°C to 70°C, typical specifications are at T_A = 25°C. All specifications are at RX_ANA_SUP = RX_DIG_SUP = 3 V, TX_CTRL_SUP = LED_DRV_SUP = 3.3 V, stage 2 amplifier disabled, and f_{CLK} = 8 MHz, unless otherwise noted.

PARAMETER		TEST CONDITIONS	MIN	TYP	MAX	UNIT
PERFORMANCE (Full-Signal Chain)						
I_{IN_FS}	Full-scale input current	R_F = 10 kΩ		50		µA
		R_F = 25 kΩ		20		µA
		R_F = 50 kΩ		10		µA
		R_F = 100 kΩ		5		µA
		R_F = 250 kΩ		2		µA
		R_F = 500 kΩ		1		µA
		R_F = 1 MΩ		0.5		µA
PRF	Pulse repetition frequency		62.5		5000	SPS
DC_{PRF}	PRF duty cycle				25%	
CMRR	Common-mode rejection ratio	f_{CM} = 50 Hz and 60 Hz, LED1 and LED2 with R_{SERIES} = 500 kΩ, R_F = 500 kΩ		75		dB
		f_{CM} = 50 Hz and 60 Hz, LED1-AMB and LED2-AMB with R_{SERIES} = 500 kΩ, R_F = 500 kΩ		95		dB
PSRR	Power-supply rejection ratio	f_{PS} = 50 Hz, 60 Hz at PRF = 200 Hz		100		dB
		f_{PS} = 50 Hz, 60 Hz at PRF = 600 Hz		106		dB
$PSRR_{LED}$	PSRR, transmit LED driver	With respect to ripple on LED_DRV_SUP		75		dB
$PSRR_{Tx}$	PSRR, transmit control	With respect to ripple on TX_CTRL_SUP		60		dB
$PSRR_{Rx}$	PSRR, receiver	With respect to ripple on RX_ANA_SUP and RX_DIG_SUP		60		dB
	Total integrated noise current, input-referred (receiver with transmitter loop back, 0.1-Hz to 5-Hz bandwidth)	R_F = 100 kΩ, PRF = 600 Hz, duty cycle = 5%		36		pA_{RMS}
		R_F = 500 kΩ, PRF = 600 Hz, duty cycle = 5%		13		pA_{RMS}
N_{FB}	Noise-free bits (receiver with transmitter loop back, 0.1-Hz to 5-Hz bandwidth)	R_F = 100 kΩ, PRF = 600 Hz, duty cycle = 5%		14.3		Bits
		R_F = 500 kΩ, PRF = 600 Hz, duty cycle = 5%		13.5		Bits
RECEIVER FUNCTIONAL BLOCK LEVEL SPECIFICATION						
	Total integrated noise current, input referred (receiver alone) over 0.1-Hz to 5-Hz bandwidth	R_F = 500 kΩ, ambient cancellation enabled, stage 2 gain = 4, PRF = 1200 Hz, LED duty cycle = 25%		1.4		pA_{RMS}
		R_F = 500 kΩ, ambient cancellation enabled, stage 2 gain = 4, PRF = 1200 Hz, LED duty cycle = 5%		5		pA_{RMS}
I-V TRANSIMPEDANCE AMPLIFIER						
G	Gain	R_F = 10 kΩ to 1 MΩ	See the *Receiver Channel* section for details			V/µA
	Gain accuracy			±7%		
	Feedback resistance	R_F	10k, 25k, 50k, 100k, 250k, 500k, and 1M			Ω
	Feedback resistor tolerance	R_F		±20%		
	Feedback capacitance	C_F	5, 10, 25, 50, 100, and 250			pF
	Feedback capacitor tolerance	C_F		±20%		
	Full-scale differential output voltage			1		V
	Common-mode voltage on input pins	Set internally		0.9		V
	External differential input capacitance	Includes equivalent capacitance of photodiode, cables, EMI filter, and so forth	10		1000	pF
	Shield output voltage, V_{CM}	With a 1-kΩ series resistor and a 10-nF decoupling capacitor to ground		0.9		V

Copyright © 2012–2014, Texas Instruments Incorporated

Electrical Characteristics (continued)

Minimum and maximum specifications are at T_A = 0°C to 70°C, typical specifications are at T_A = 25°C. All specifications are at RX_ANA_SUP = RX_DIG_SUP = 3 V, TX_CTRL_SUP = LED_DRV_SUP = 3.3 V, stage 2 amplifier disabled, and f_{CLK} = 8 MHz, unless otherwise noted.

PARAMETER		TEST CONDITIONS	MIN	TYP	MAX	UNIT
AMBIENT CANCELLATION STAGE						
	Gain			0, 3.5, 6, 9.5, and 12		dB
	Current DAC range		0		10	µA
	Current DAC step size			1		µA
LOW-PASS FILTER						
	Low-pass corner frequency	3-dB attenuation		500		Hz
	Pass-band attenuation, 2 Hz to 10 Hz	Duty cycle = 25%		0.004		dB
		Duty cycle = 10%		0.041		dB
	Filter settling time	After diagnostics mode		28		ms
ANALOG-TO-DIGITAL CONVERTER						
	Resolution				22	Bits
	Sample rate	See the *ADC Operation and Averaging Module* section		4 × PRF		SPS
	ADC full-scale voltage			±1.2		V
	ADC conversion time	See the *ADC Operation and Averaging Module* section	50		PRF / 4	µs
	ADC reset time		2			t_{CLK}
TRANSMITTER						
	Output current range			Selectable, 0 to 50 (see the LEDCNTRL: LED Control Register for details)		mA
	LED current DAC error			±10%		
	Output current resolution			8		Bits
	Transmitter noise dynamic range, over 0.1-Hz to 5-Hz bandwidth	At 5-mA output current		95		dB
		At 25-mA output current		95		dB
		At 50-mA output current		95		dB
	Voltage on TXP (or TXN) pin when low-side switch connected to TXP (or TXN) turns on	At 50-mA output current		1.0 + (voltage drop across LED, cable, and so forth) to 5.25		V
	Minimum sample time of LED1 and LED2 pulses			50		µs
	LED current DAC leakage current	LED_ON = 0		1		µA
		LED_ON = 1		50		µA
	LED current DAC linearity	Percent of full-scale current		0.5%		
	Output current settling time (with resistive load)	From zero current to 50 mA		7		µs
		From 50 mA to zero current		7		µs
DIAGNOSTICS						
	Duration of diagnostics state machine	Start of diagnostics after the DIAG_EN register bit is set. End of diagnostic is indicated by DIAG_END going high.		16		ms
	Open fault resistance			> 100		kΩ
	Short fault resistance			< 10		kΩ
INTERNAL OSCILLATOR						
f_{CLKOUT}	CLKOUT frequency	With an 8-MHz crystal connected to the XIN, XOUT pins		4		MHz
	CLKOUT duty cycle			50%		
	Crystal oscillator start-up time	With an 8-MHz crystal connected to the XIN, XOUT pins		200		µs

Copyright © 2012–2014, Texas Instruments Incorporated

Electrical Characteristics (continued)

Minimum and maximum specifications are at T_A = 0°C to 70°C, typical specifications are at T_A = 25°C. All specifications are at RX_ANA_SUP = RX_DIG_SUP = 3 V, TX_CTRL_SUP = LED_DRV_SUP = 3.3 V, stage 2 amplifier disabled, and f_{CLK} = 8 MHz, unless otherwise noted.

PARAMETER		TEST CONDITIONS	MIN	TYP	MAX	UNIT
EXTERNAL CLOCK						
	Maximum allowable external clock jitter	For SPO2 applications		50		ps
		For optical heart rate only			1000	ps
	External clock input frequency	±10%		8		MHz
	External clock input voltage	Voltage input high (V_{IH})	0.75 × RX_DIG_SUP			V
		Voltage input low (V_{IL})	0.25 × RX_DIG_SUP			V
TIMING						
	Wake-up time from complete power-down			1000		ms
	Wake-up time from Rx power-down			100		µs
	Wake-up time from Tx power-down			1000		ms
$t_{\overline{RESET}}$	Active low $\overline{RESET}$ pulse duration			1		ms
$t_{DIAGEND}$	DIAG_END pulse duration at the completion of diagnostics			4		CLKOUT cycles
t_{ADCRDY}	ADC_RDY pulse duration			1		CLKOUT cycle
DIGITAL SIGNAL CHARACTERISTICS						
V_{IH}	Logic high input voltage	AFE_$\overline{PDN}$, SCLK, SPISIMO, SPISTE, $\overline{RESET}$	0.8 DVDD		DVDD + 0.1	V
V_{IL}	Logic low input voltage	AFE_$\overline{PDN}$, SCLK, SPISIMO, SPISTE, $\overline{RESET}$	–0.1		0.2 DVDD	V
I_{IN}	Logic input current	0 V < $V_{DigitalInput}$ < DVDD	–10		10	µA
V_{OH}	Logic high output voltage	DIAG_END, LED_ALM, PD_ALM, SPISOMI, ADC_RDY, CLKOUT	0.9 DVDD		> (RX_DIG_SUP – 0.2 V)	V
V_{OL}	Logic low output voltage	DIAG_END, LED_ALM, PD_ALM, SPISOMI, ADC_RDY, CLKOUT		< 0.4	0.1 DVDD	V
SUPPLY CURRENT						
	Receiver analog supply current	RX_ANA_SUP = 3.0 V, with 8-MHz clock running, Rx stage 2 disabled		0.6		mA
		RX_ANA_SUP = 3.0 V, with 8-MHz clock running, Rx stage 2 enabled		0.7		mA
	Receiver digital supply current	RX_DIG_SUP = 3.0 V		0.27		mA
LED_DRV_SUP	LED driver supply current	With zero LED current setting		55		µA
TX_CTRL_SUP	Transmitter control supply current			15		µA
	Complete power-down (using AFE_PDN pin)	Receiver current only (RX_ANA_SUP)		3		µA
		Receiver current only (RX_DIG_SUP)		3		µA
		Transmitter current only (LED_DRV_SUP)		1		µA
		Transmitter current only (TX_CTRL_SUP)		1		µA
	Power-down Rx alone	Receiver current only (RX_ANA_SUP)		220		µA
		Receiver current only (RX_DIG_SUP)		220		µA
	Power-down Tx alone	Transmitter current only (LED_DRV_SUP)		2		µA
		Transmitter current only (TX_CTRL_SUP)		2		µA

Copyright © 2012–2014, Texas Instruments Incorporated

Electrical Characteristics (continued)

Minimum and maximum specifications are at T_A = 0°C to 70°C, typical specifications are at T_A = 25°C. All specifications are at RX_ANA_SUP = RX_DIG_SUP = 3 V, TX_CTRL_SUP = LED_DRV_SUP = 3.3 V, stage 2 amplifier disabled, and f_{CLK} = 8 MHz, unless otherwise noted.

PARAMETER		TEST CONDITIONS	MIN	TYP	MAX	UNIT
POWER DISSIPATION						
Quiescent power dissipation		Normal operation (excluding LEDs)		2.84		mW
		Power-down		0.1		mW
Power-down with the AFE_PDN pin	LED_DRV_SUP	LED_DRV_SUP current value. Does not include LED current.		1		µA
	TX_CTRL_SUP			1		µA
	RX_ANA_SUP			5		µA
	RX_DIG_SUP			0.1		µA
Power-down with the PDNAFE register bit	LED_DRV_SUP	LED_DRV_SUP current value. Does not include LED current.		1		µA
	TX_CTRL_SUP			1		µA
	RX_ANA_SUP			15		µA
	RX_DIG_SUP			20		µA
Power-down Rx	LED_DRV_SUP	LED_DRV_SUP current value. Does not include LED current.		50		µA
	TX_CTRL_SUP			15		µA
	RX_ANA_SUP			220		µA
	RX_DIG_SUP			220		µA
Power-down Tx	LED_DRV_SUP	LED_DRV_SUP current value. Does not include LED current.		2		µA
	TX_CTRL_SUP			2		µA
	RX_ANA_SUP			600		µA
	RX_DIG_SUP			230		µA
After reset, with 8-MHz clock running	LED_DRV_SUP	LED_DRV_SUP current value. Does not include LED current.		55		µA
	TX_CTRL_SUP			15		µA
	RX_ANA_SUP			600		µA
	RX_DIG_SUP			230		µA
With stage 2 mode enabled and 8-MHz clock running	LED_DRV_SUP	LED_DRV_SUP current value. Does not include LED current.		55		µA
	TX_CTRL_SUP			15		µA
	RX_ANA_SUP			700		µA
	RX_DIG_SUP			270		µA

Copyright © 2012–2014, Texas Instruments Incorporated

7.6 Timing Requirements

PARAMETER		MIN	TYP	MAX	UNIT
t_{CLK}	Clock frequency on the XIN pin		8		MHz
t_{SCLK}	Serial shift clock period	62.5			ns
t_{STECLK}	STE low to SCLK rising edge, setup time	10			ns
$t_{CLKSTEH,L}$	SCLK transition to SPI STE high or low	10			ns
t_{SIMOSU}	SIMO data to SCLK rising edge, setup time	10			ns
t_{SIMOHD}	Valid SIMO data after SCLK rising edge, hold time	10			ns
t_{SOMIPD}	SCLK falling edge to valid SOMI, setup time	17			ns
t_{SOMIHD}	SCLK rising edge to invalid data, hold time	0.5			t_{SCLK}

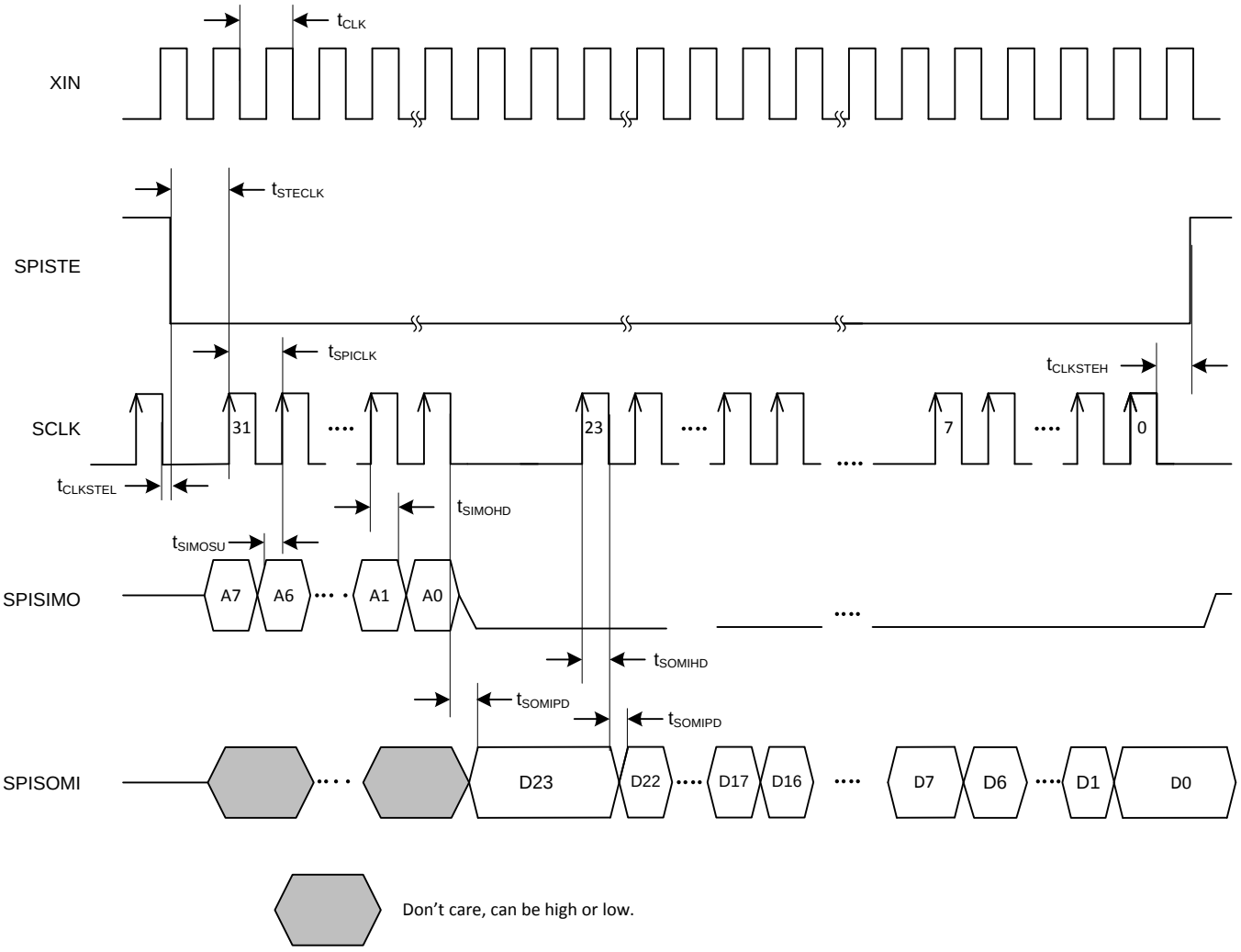

(1) The SPI_READ register bit must be enabled before attempting a register read.

(2) Specify the register address whose contents must be read back on A[7:0].

(3) The AFE outputs the contents of the specified register on the SPISOMI pin.

Figure 1. Serial Interface Timing Diagram, Read Operation[(1)(2)(3)]

Copyright © 2012–2014, Texas Instruments Incorporated

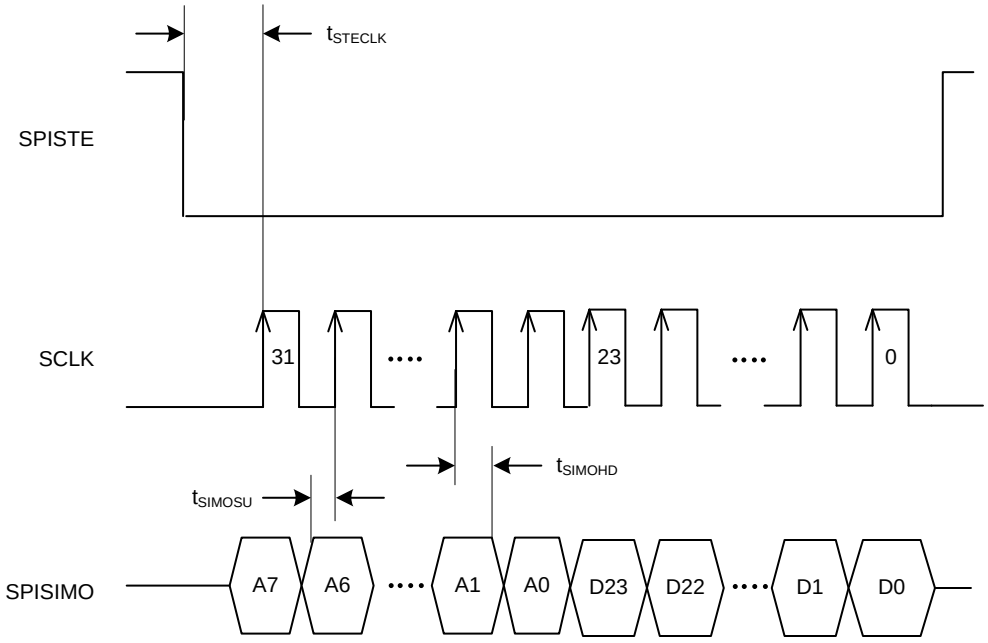

Figure 2. Serial Interface Timing Diagram, Write Operation

7.7 Timing Requirements: Supply Ramp and Power-Down

PARAMETER		VALUE
t_1	Time between Rx and Tx supplies ramping up	Keep as small as possible (for example, ±10 ms)
t_2	Time between both supplies stabilizing and high-going $\overline{\text{RESET}}$ edge	> 100 ms
t_3	$\overline{\text{RESET}}$ pulse duration	> 0.5 ms
t_4	Time between $\overline{\text{RESET}}$ and SPI commands	> 1 µs
t_5	Time between SPI commands and the ADC_$\overline{\text{RESET}}$ which corresponds to valid data	> 3 ms of cumulative sampling time in each phase(1)(2)(3)
t_6	Time between $\overline{\text{RESET}}$ pulse and high-accuracy data coming out of the signal chain	> 1 s(3)
t_7	Time from AFE_$\overline{\text{PDN}}$ high-going edge and $\overline{\text{RESET}}$ pulse(4)	> 100 ms
t_8	Time from AFE_$\overline{\text{PDN}}$ high-going edge (or PDN_AFE bit reset) to high-accuracy data coming out of the signal chain	> 1 s(3)

(1) This time is required for each of the four switched RC filters to fully settle to the new settings. The same time is applicable whenever there is a change to any of the signal chain controls (for example, LED current setting, TIA gain, and so forth).
(2) If the SPI commands involve a change in the TX_REF value from its default, then there is additional wait time of approximately 1 s (for a 2.2-µF decoupling capacitor on the TX_REF pin).
(3) Dependent on the value of the capacitors on the BG and TX_REF pins. The 1-s wait time is necessary when the capacitors are 2.2 µF and scale down proportionate to the capacitor value. A very low capacitor (for example, 0.1 µF) on these pins causes the transmitter dynamic range to reduce to approximately 100 dB.
(4) After an active power-down from AFE_$\overline{\text{PDN}}$, the device should be reset using a low-going $\overline{\text{RESET}}$ pulse.

Copyright © 2012–2014, Texas Instruments Incorporated

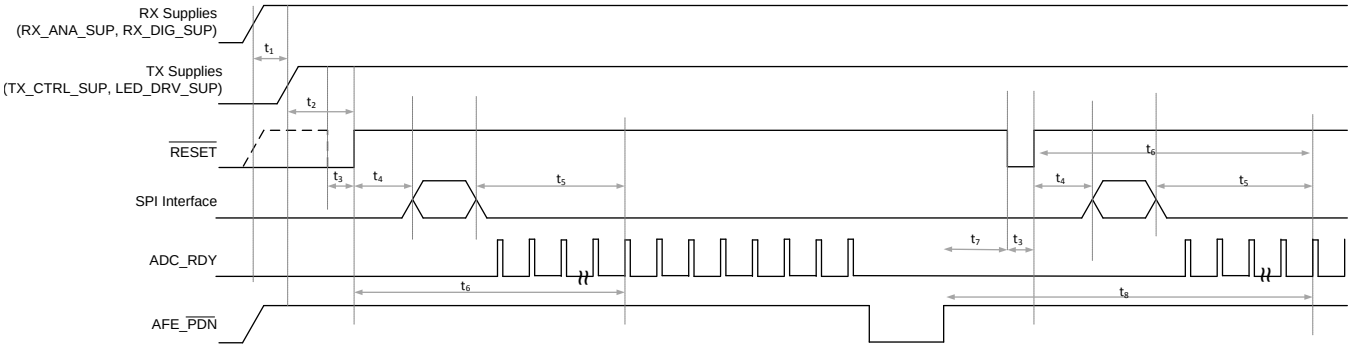

Figure 3. Supply Ramp and Hardware Power-Down Timing

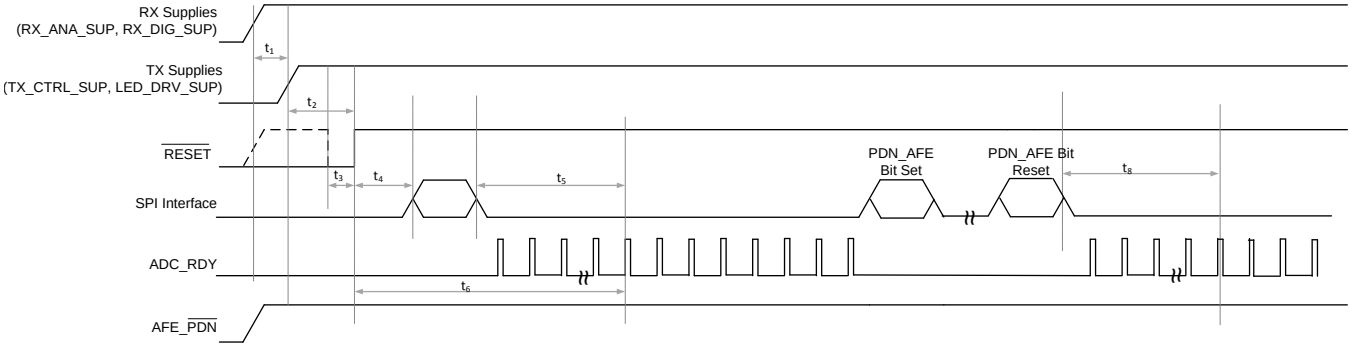

Figure 4. Supply Ramp and Software Power-Down Timing

7.8 Typical Characteristics

Minimum and maximum specifications are at T_A = 0°C to 70°C. Typical specifications are at T_A = 25°C, RX_ANA_SUP = RX_DIG_SUP = 3.0 V, TX_CTRL_SUP = LED_DRV_SUP = 3.3 V, and f_{CLK} = 8 MHz, unless otherwise noted.

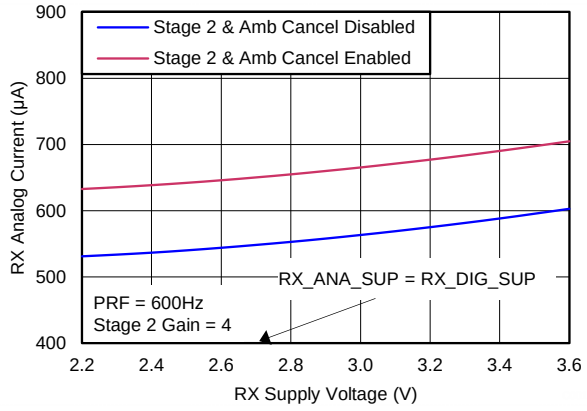

Figure 5. Total Rx Current vs Rx Supply Voltage

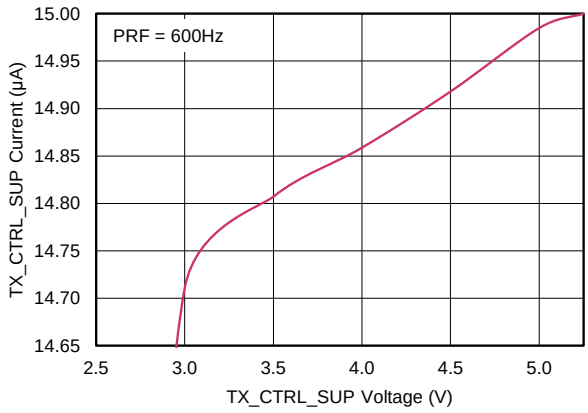

Figure 6. TX_CTRL_SUP Current vs TX_CTRL_SUP Voltage

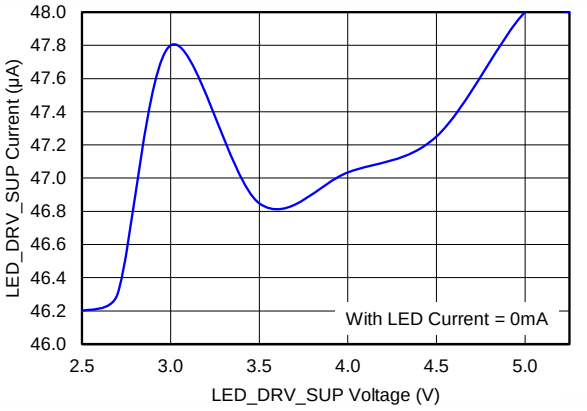

Figure 7. LED_DRV_SUP Current vs LED_DRV_SUP Voltage

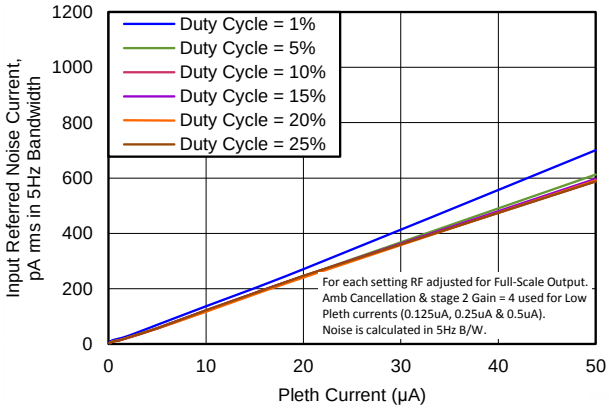

Figure 8. Input-Referred Noise Current vs Pleth Current (PRF = 100 Hz)

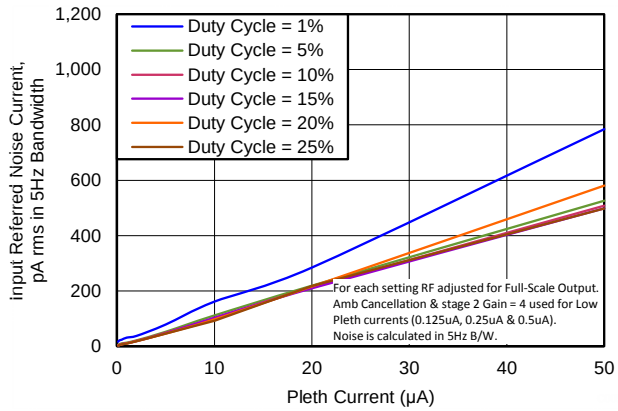

Figure 9. Input-Referred Noise Current vs Pleth Current (PRF = 300 Hz)

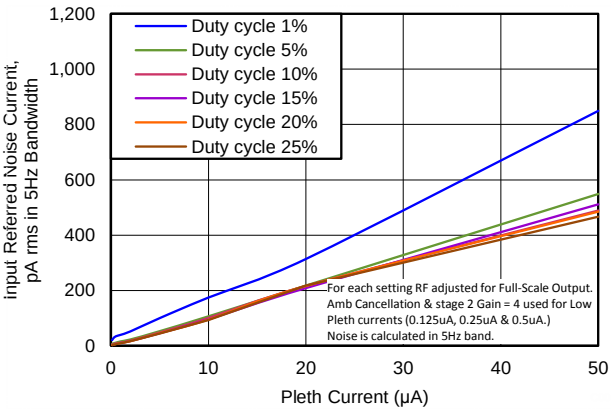

Figure 10. Input-Referred Noise Current vs Pleth Current (PRF = 600 Hz)

Copyright © 2012–2014, Texas Instruments Incorporated

Typical Characteristics (continued)

Minimum and maximum specifications are at T_A = 0°C to 70°C. Typical specifications are at T_A = 25°C, RX_ANA_SUP = RX_DIG_SUP = 3.0 V, TX_CTRL_SUP = LED_DRV_SUP = 3.3 V, and f_{CLK} = 8 MHz, unless otherwise noted.

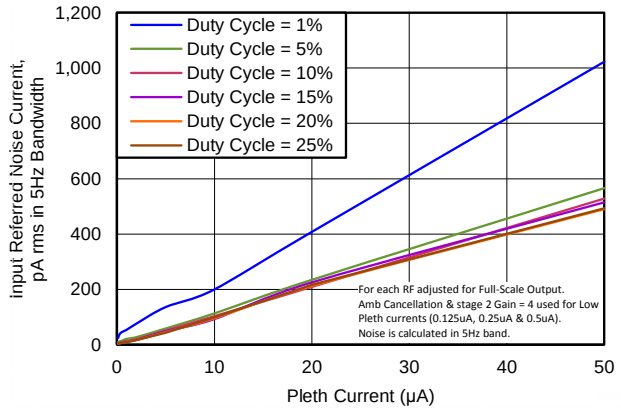

Figure 11. Input-Referred Noise Current vs Pleth Current (PRF = 1200 Hz)

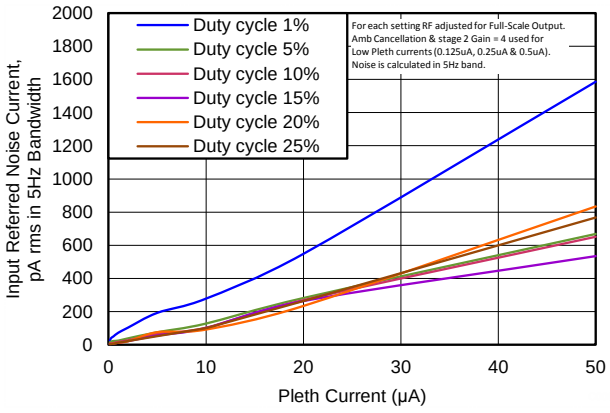

Figure 12. Input-Referred Noise Current vs Pleth Current (PRF = 2500 Hz)

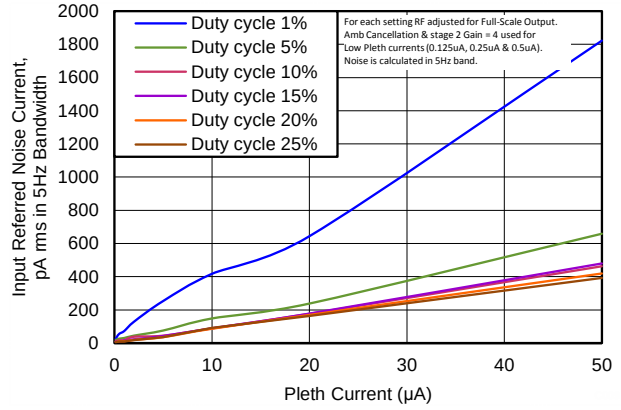

Figure 13. Input-Referred Noise Current vs Pleth Current (PRF = 5000 Hz)

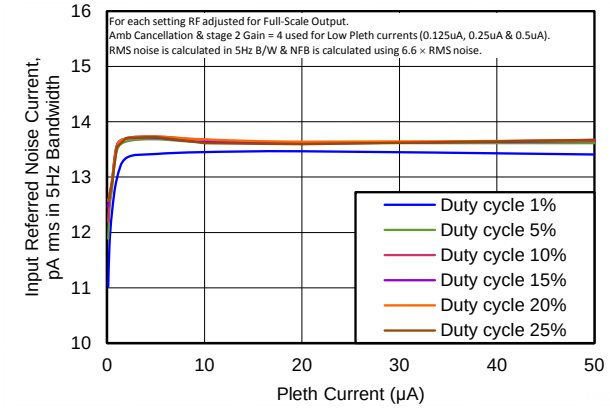

Figure 14. Noise-Free Bits vs Pleth Current (PRF = 100 Hz)

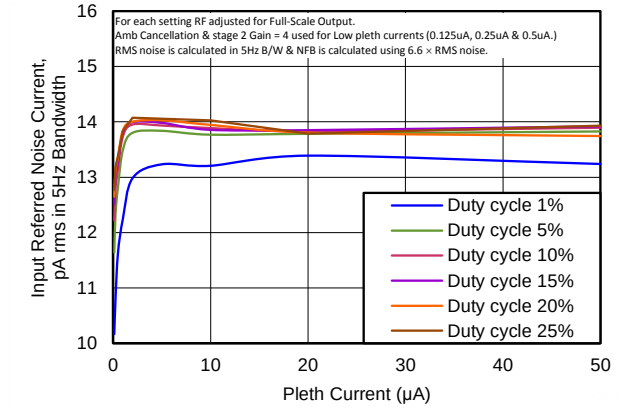

Figure 15. Noise-Free Bits vs Pleth Current (PRF = 300 Hz)

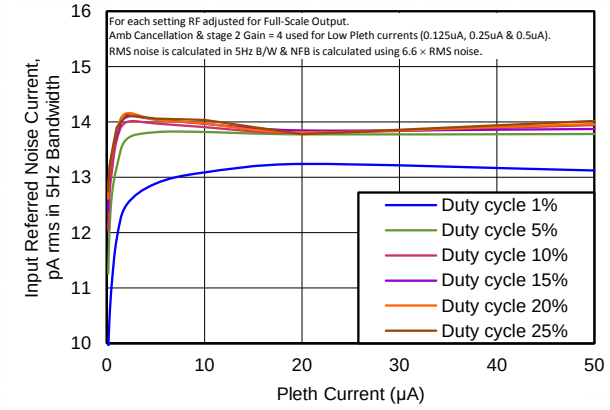

Figure 16. Noise-Free Bits vs Pleth Current (PRF = 600 Hz)

Copyright © 2012–2014, Texas Instruments Incorporated

Typical Characteristics (continued)

Minimum and maximum specifications are at T_A = 0°C to 70°C. Typical specifications are at T_A = 25°C, RX_ANA_SUP = RX_DIG_SUP = 3.0 V, TX_CTRL_SUP = LED_DRV_SUP = 3.3 V, and f_{CLK} = 8 MHz, unless otherwise noted.

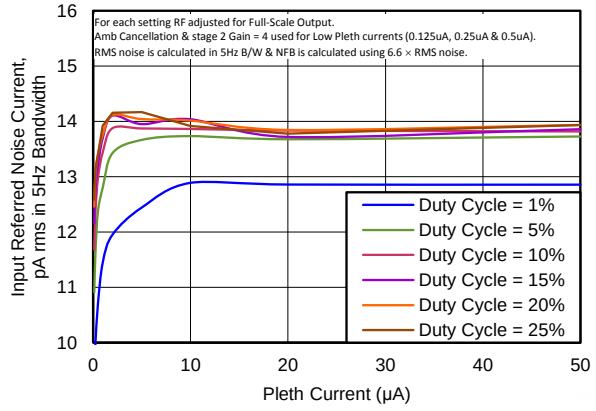

Figure 17. Noise-Free Bits vs Pleth Current (PRF = 1200 Hz)

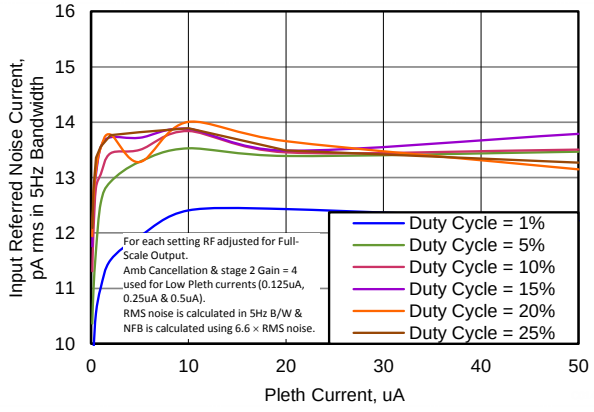

Figure 18. Noise-Free Bits vs Pleth Current (PRF = 2500 Hz)

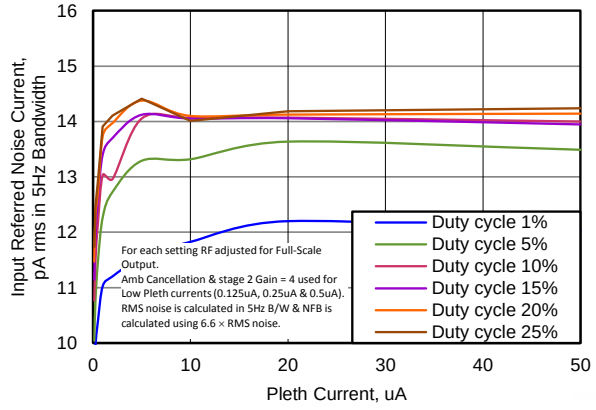

Figure 19. Noise-Free Bits vs Pleth Current (PRF = 5000 Hz)

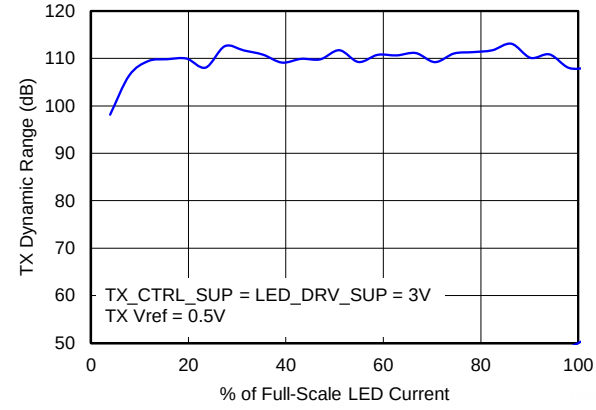

Figure 20. Transmitter Dynamic Range (5-Hz BW)

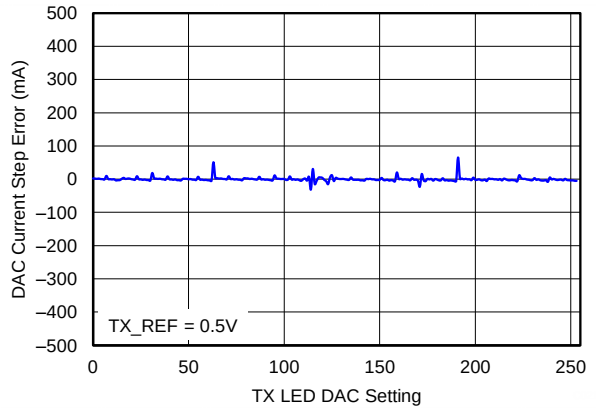

Figure 21. Transmitter DAC Current Step Error (50 mA, Max)

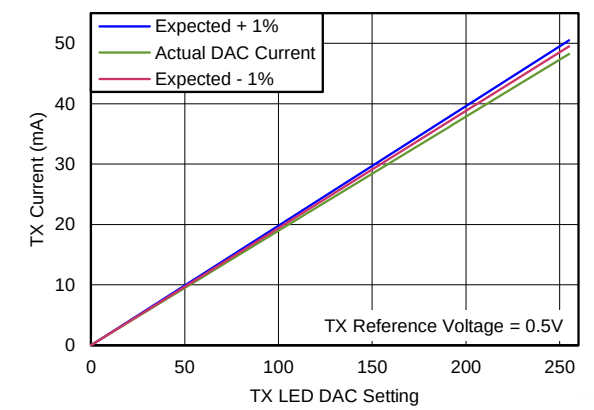

Figure 22. Transmitter Current Linearity (50-mA Range)

Copyright © 2012–2014, Texas Instruments Incorporated

Typical Characteristics (continued)

Minimum and maximum specifications are at T_A = 0°C to 70°C. Typical specifications are at T_A = 25°C, RX_ANA_SUP = RX_DIG_SUP = 3.0 V, TX_CTRL_SUP = LED_DRV_SUP = 3.3 V, and f_{CLK} = 8 MHz, unless otherwise noted.

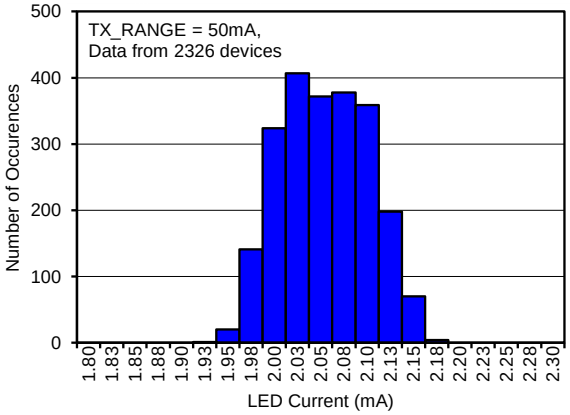

Figure 23. LED Current with Tx DAC Setting = 10 (2 mA)

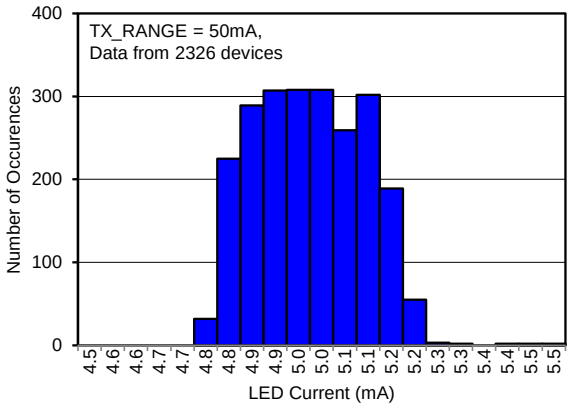

Figure 24. LED Current with Tx DAC Setting = 25 (5 mA)

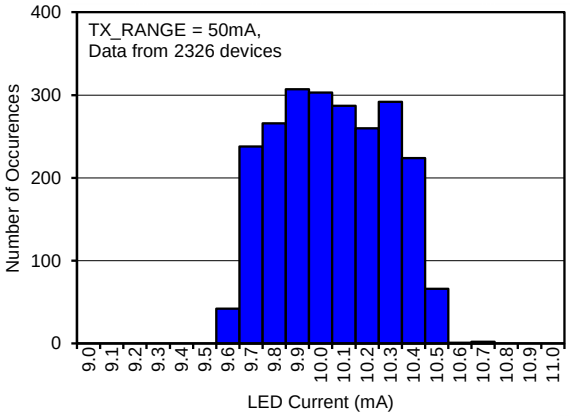

Figure 25. LED Current with Tx DAC Setting = 51 (10 mA)

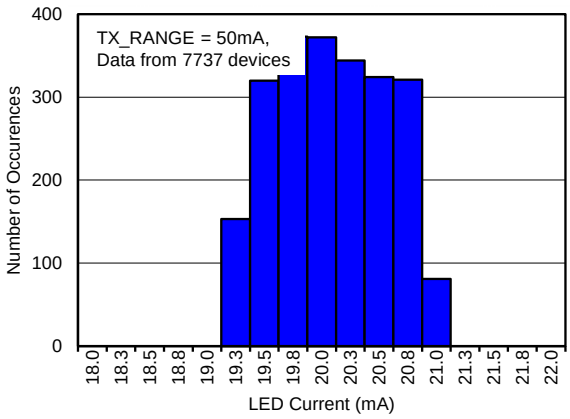

Figure 26. LED Current with Tx DAC Setting = 102 (20 mA)

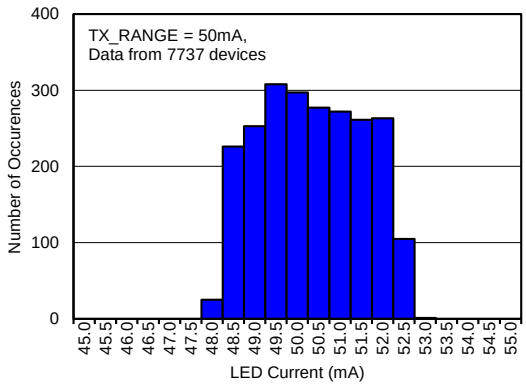

Figure 27. LED Current with Tx DAC Setting = 255 (50 mA)

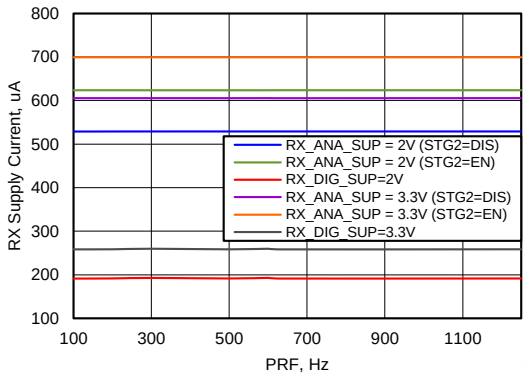

Figure 28. Receiver Supplies vs PRF

Copyright © 2012–2014, Texas Instruments Incorporated

Typical Characteristics (continued)

Minimum and maximum specifications are at T_A = 0°C to 70°C. Typical specifications are at T_A = 25°C, RX_ANA_SUP = RX_DIG_SUP = 3.0 V, TX_CTRL_SUP = LED_DRV_SUP = 3.3 V, and f_{CLK} = 8 MHz, unless otherwise noted.

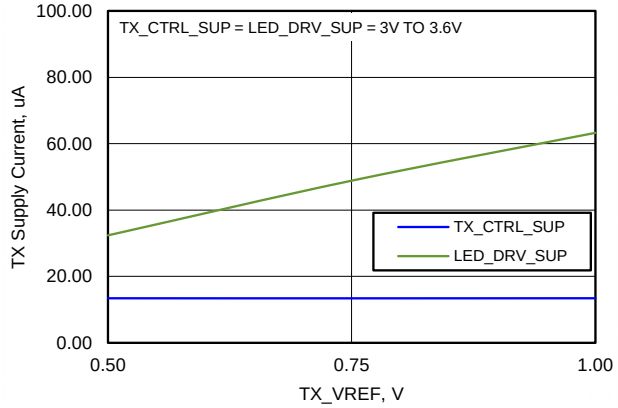

Figure 29. Transmitter Supplies vs TX_REF

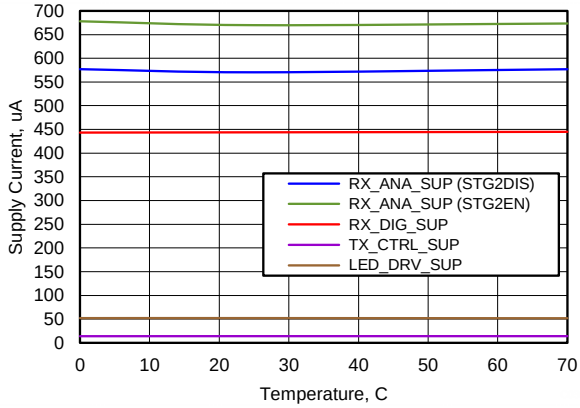

Figure 30. Power Supplies vs Temperature

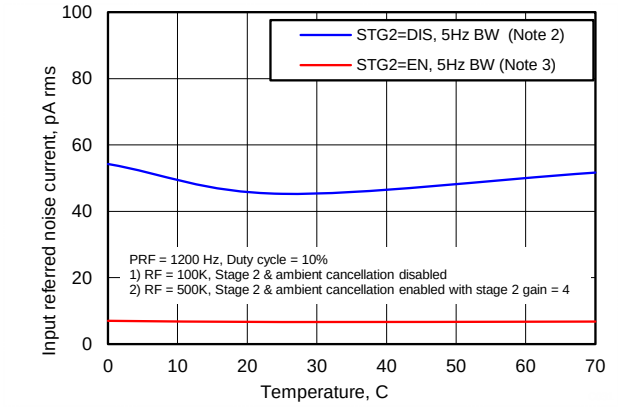

Figure 31. Input-Referred Noise vs Temperature

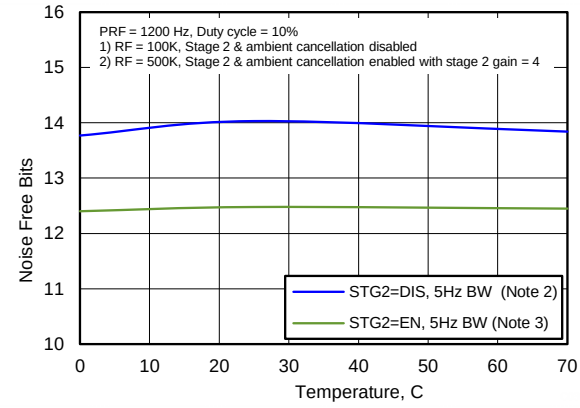

Figure 32. Noise-Free Bits vs Temperature

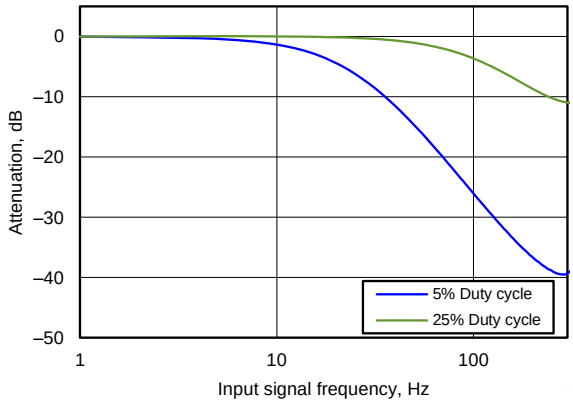

Figure 33. Filter Response vs Duty Cycle

Copyright © 2012–2014, Texas Instruments Incorporated

8 Detailed Description

8.1 Overview

The AFE4400 is a complete analog front-end (AFE) solution targeted for pulse oximeter applications. The device consists of a low-noise receiver channel, an LED transmit section, and diagnostics for sensor and LED fault detection. To ease clocking requirements and provide the low-jitter clock to the AFE, an oscillator is also integrated that functions from an external crystal. The device communicates to an external microcontroller or host processor using an SPI interface. The *Functional Block Diagram* section provides a detailed block diagram for the AFE4400. The blocks are described in more detail in the following sections.

8.2 Functional Block Diagram

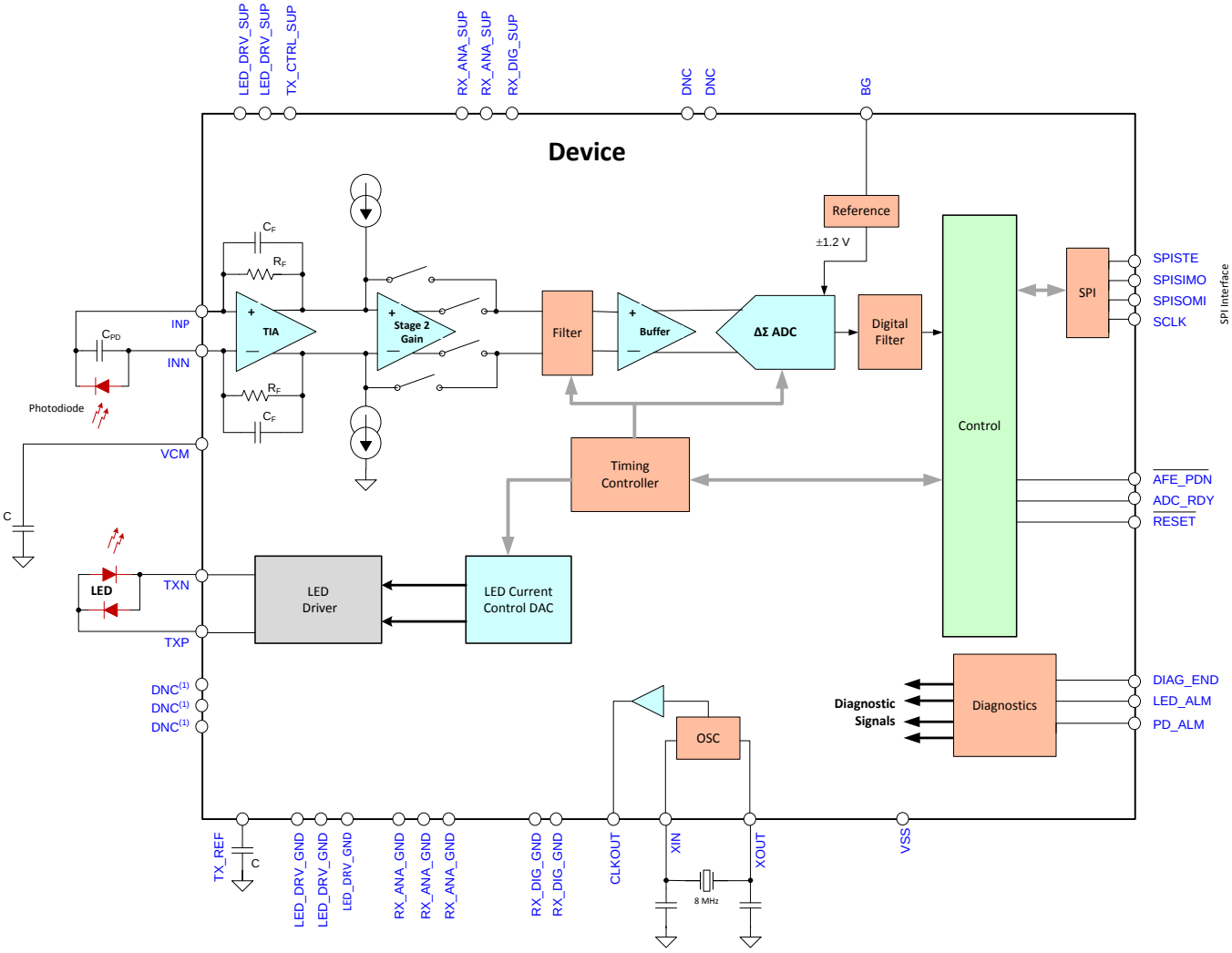

8.3 Feature Description

8.3.1 Receiver Channel

This section describes the functionality of the receiver channel.

8.3.1.1 Receiver Front-End

The receiver consists of a differential current-to-voltage (I-V) transimpedance amplifier (TIA) that converts the input photodiode current into an appropriate voltage, as shown in Figure 34. The feedback resistor of the amplifier (R_F) is programmable to support a wide range of photodiode currents. Available R_F values include: 1 MΩ, 500 kΩ, 250 kΩ, 100 kΩ, 50 kΩ, 25 kΩ, and 10 kΩ.

The device is ideally suited as a front-end for a PPG (photoplethysmography) application. In such an application, the light from the LED is reflected (or transmitted) from (or through) the various components inside the body (such as blood, tissue, and so forth) and are received by the photodiode. The signal received by the photodiode has three distinct components:

1. A pulsatile or ac component that arises as a result of the changes in blood volume through the arteries.
2. A constant dc signal that is reflected or transmitted from the time invariant components in the path of light. This constant dc component is referred to as the pleth signal.
3. Ambient light entering the photodiode.

The ac component is usually a small fraction of the pleth component, with the ratio referred to as the perfusion index (PI). Thus, the allowed signal chain gain is usually determined by the amplitude of the dc component.

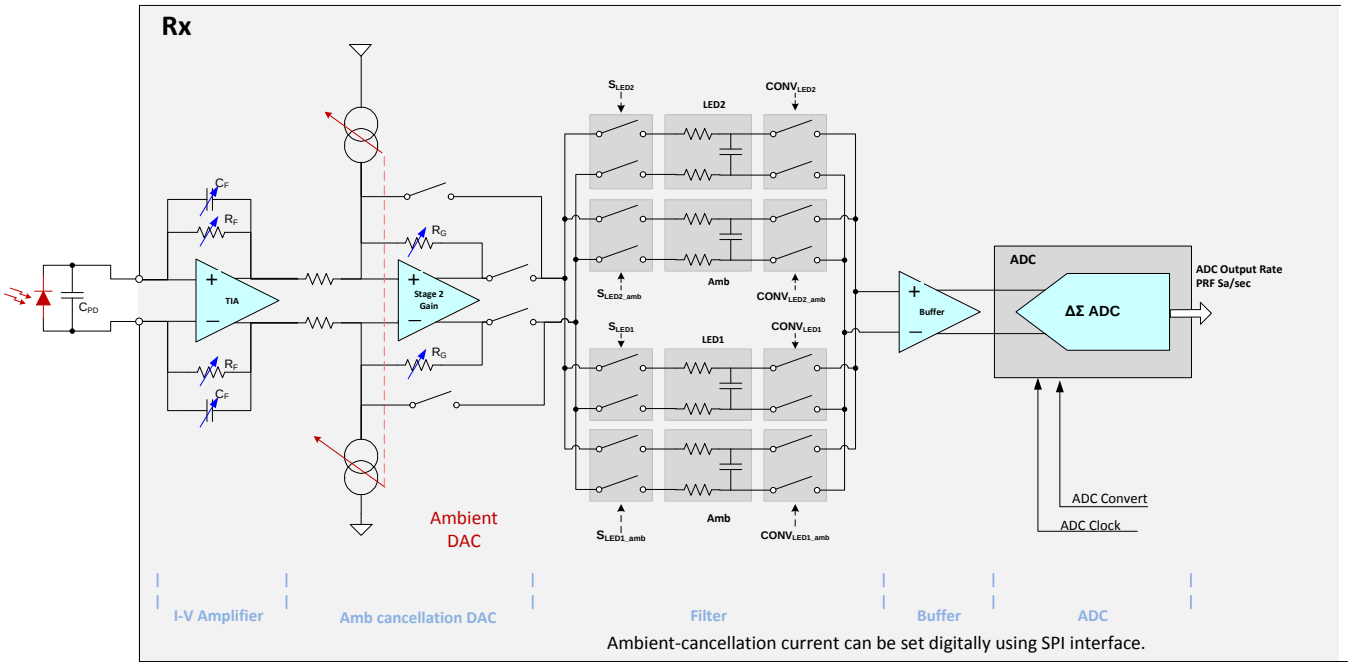

Figure 34. Receiver Front-End

The R_F amplifier and the feedback capacitor (C_F) form a low-pass filter for the input signal current. Always ensure that the low-pass filter RC time constant has sufficiently high bandwidth (as shown by Equation 1) because the input current consists of pulses. For this reason, the feedback capacitor is also programmable. Available C_F values include: 5 pF, 10 pF, 25 pF, 50 pF, 100 pF, and 250 pF. Any combination of these capacitors can also be used.

$$R_F \times C_F \leq \frac{\text{Rx Sample Time}}{10} \quad (1)$$

Copyright © 2012–2014, Texas Instruments Incorporated

Feature Description (continued)

The output voltage of the I-V amplifier includes the pleth component (the desired signal) and a component resulting from the ambient light leakage. The I-V amplifier is followed by the second stage, which consists of a current digital-to-analog converter (DAC) that sources the cancellation current and an amplifier that gains up the pleth component alone. The amplifier has five programmable gain settings: 0 dB, 3.5 dB, 6 dB, 9.5 dB, and 12 dB. The gained-up pleth signal is then low-pass filtered (500-Hz bandwidth) and buffered before driving a 22-bit ADC. The current DAC has a cancellation current range of 10 µA with 10 steps (1 µA each). The DAC value can be digitally specified with the SPI interface. Using ambient compensation with the ambient DAC allows the dc-biased signal to be centered to near mid-point of the amplifier (±0.9 V). Using the gain of the second stage allows for more of the available ADC dynamic range to be used.

The output of the ambient cancellation amplifier is separated into LED2 and LED1 channels. When LED2 is on, the amplifier output is filtered and sampled on capacitor C_{LED2}. Similarly, the LED1 signal is sampled on the C_{LED1} capacitor when LED1 is on. In between the LED2 and LED1 pulses, the idle amplifier output is sampled to estimate the ambient signal on capacitors C_{LED2_amb} and C_{LED1_amb}.

The sampling duration is termed the *Rx sample time* and is programmable for each signal, independently. The sampling can start after the I-V amplifier output is stable (to account for LED and cable settling times). The Rx sample time is used for all dynamic range calculations; the minimum time recommended is 50 µs. While the AFE4400 can support pulse widths lower than 50 us, having too low a pulse width could result in a degraded signal and noise from the photodiode.

A single, 22-bit ADC converts the sampled LED2, LED1, and ambient signals sequentially. Each conversion provides a single digital code at the ADC output. As discussed in the *Receiver Timing* section, the conversions are meant to be staggered so that the LED2 conversion starts after the end of the LED2 sample phase, and so on.

Note that four data streams are available at the ADC output (LED2, LED1, ambient LED2, and ambient LED1) at the same rate as the pulse repetition frequency. The ADC is followed by a digital ambient subtraction block that additionally outputs the (LED2 – ambient LED2) and (LED1 – ambient LED1) data values.

Copyright © 2012–2014, Texas Instruments Incorporated

Feature Description (continued)

8.3.1.2 Ambient Cancellation Scheme and Second Stage Gain Block

The receiver provides digital samples corresponding to ambient duration. The host processor (external to the AFE) can use these ambient values to estimate the amount of ambient light leakage. The processor must then set the value of the ambient cancellation DAC using the SPI, as shown in Figure 35.

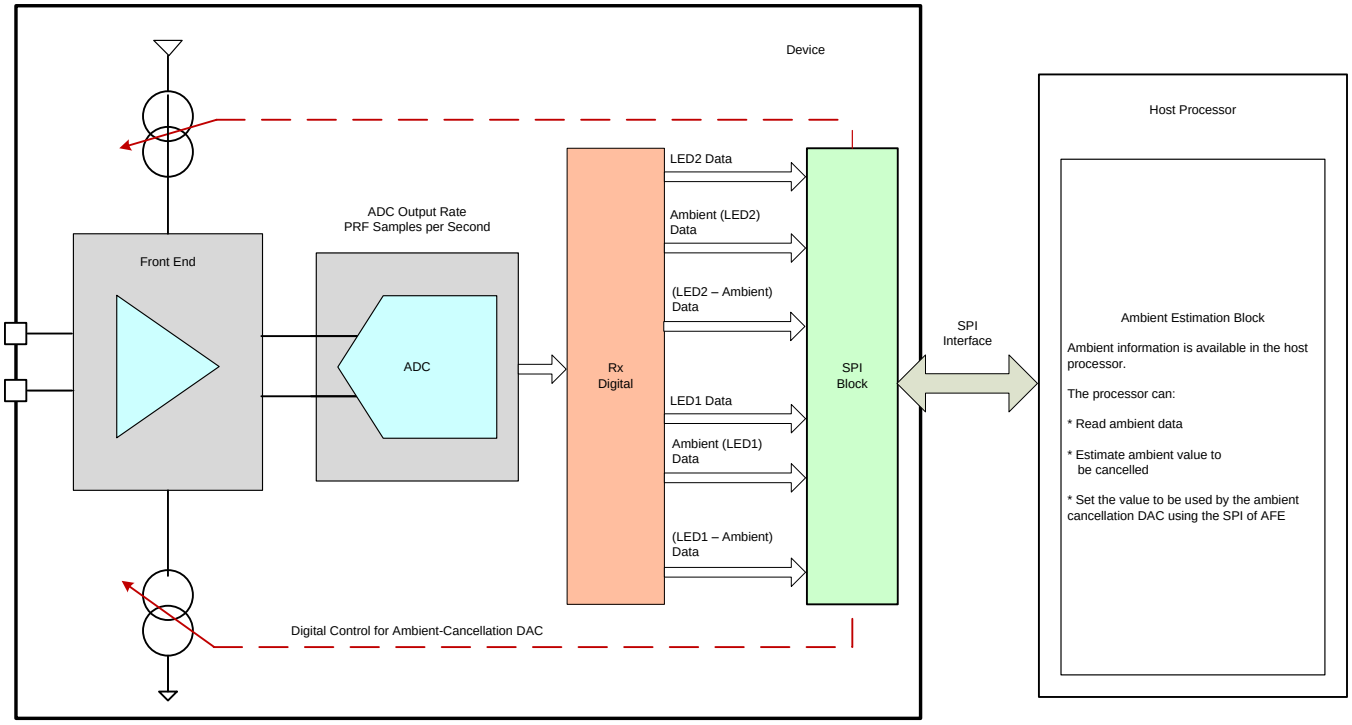

Figure 35. Ambient Cancellation Loop (Closed by the Host Processor)

Copyright © 2012–2014, Texas Instruments Incorporated

Feature Description (continued)

Using the set value, the ambient cancellation stage subtracts the ambient component and gains up only the pleth component of the received signal; see Figure 36. The amplifier gain is programmable to 0 dB, 3.5 dB, 6 dB, 9.5 dB, and 12 dB.

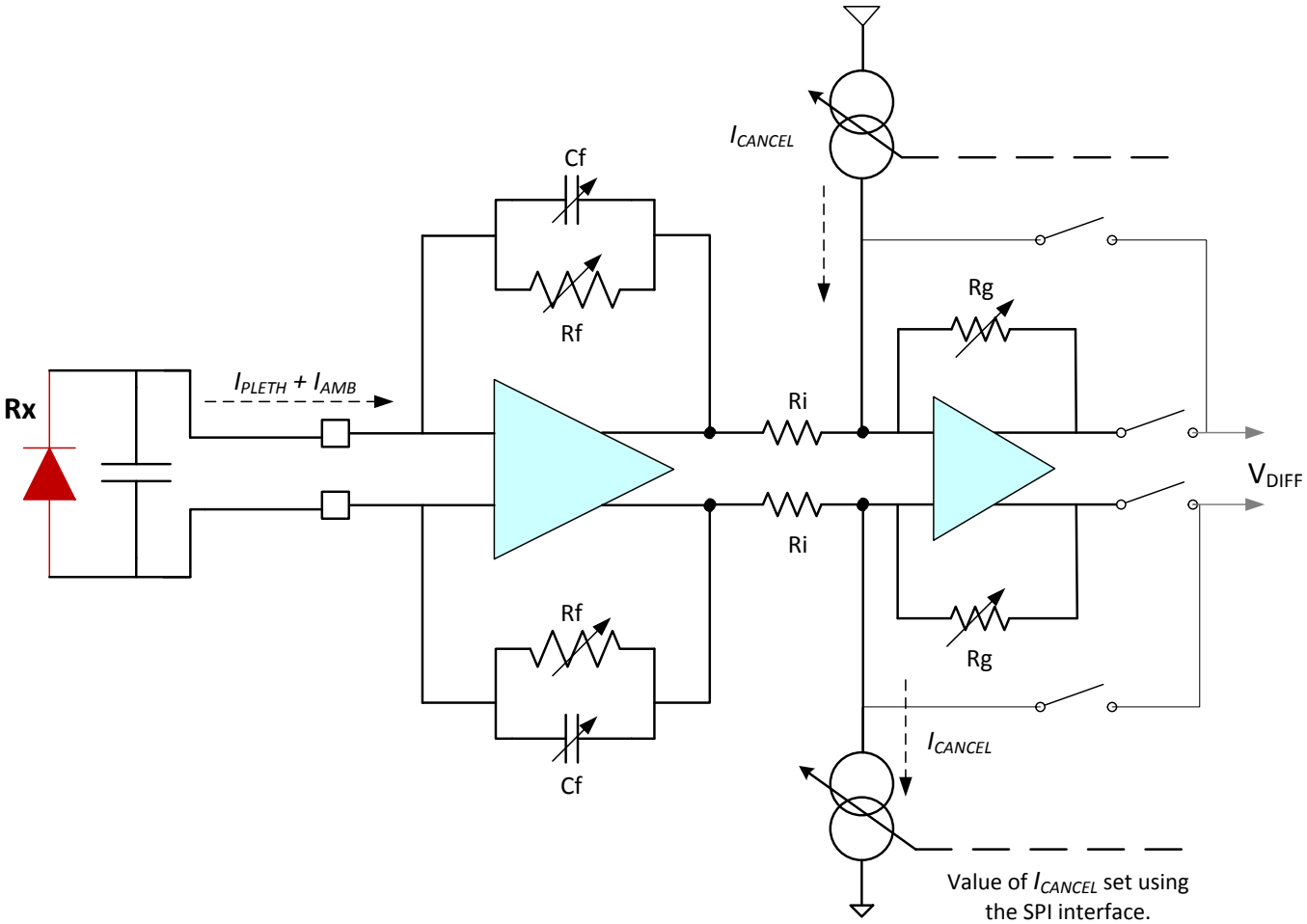

Figure 36. Front-End (I-V Amplifier and Cancellation Stage)

Feature Description (continued)

The differential output of the second stage is V_{DIFF}, as given by Equation 2:

$$V_{DIFF} = 2 \times \left(I_{PLETH} \times \frac{R_F}{R_I} + I_{AMB} \times \frac{R_F}{R_I} - I_{CANCEL} \right) \times R_G \quad (2)$$

where:

- R_I = 100 kΩ,
- I_{PLETH} = photodiode current pleth component,
- I_{AMB} = photodiode current ambient component, and
- I_{CANCEL} = the cancellation current DAC value (as estimated by the host processor).

R_G values with various gain settings are listed in Table 1.

Table 1. R_G Values

GAIN	R_G(kΩ)
0 (x1)	100
3.5 (x1.5)	150
6 (x2)	200
9.5 (x3)	300
12 (x4)	400

8.3.1.3 Receiver Control Signals

LED2 sample phase (S_{LED2} or S_R): When this signal is high, the amplifier output corresponds to the LED2 on-time. The amplifier output is filtered and sampled into capacitor C_{LED2}. To avoid settling effects resulting from the LED or cable, program S_{LED2} to start after the LED turns on. This settling delay is programmable.

Ambient sample phase (S_{LED2_amb} or S_{R_amb}): When this signal is high, the amplifier output corresponds to the LED2 off-time and can be used to estimate the ambient signal (for the LED2 phase). The amplifier output is filtered and sampled into capacitor C_{LED2_amb}.

LED1 sample phase (S_{LED1} or S_{IR}): When this signal is high, the amplifier output corresponds to the LED1 on-time. The amplifier output is filtered and sampled into capacitor C_{LED1}. To avoid settling effects resulting from the LED or cable, program S_{LED1} to start after the LED turns on. This settling delay is programmable.

Ambient sample phase (S_{LED1_amb} or S_{IR_amb}): When this signal is high, the amplifier output corresponds to the LED1 off-time and can be used to estimate the ambient signal (for the LED1 phase). The amplifier output is filtered and sampled into capacitor C_{LED1_amb}.

LED2 convert phase ($CONV_{LED2}$ or $CONV_R$): When this signal is high, the voltage sampled on C_{LED2} is buffered and applied to the ADC for conversion. At the end of the conversion, the ADC provides a single digital code corresponding to the LED2 sample.

Ambient convert phases ($CONV_{LED2_amb}$ or $CONV_{R_amb}$, $CONV_{LED1_amb}$or $CONV_{IR_amb}$): When this signal is high, the voltage sampled on C_{LED2_amb} (or C_{LED1_amb}) is buffered and applied to the ADC for conversion. At the end of the conversion, the ADC provides a single digital code corresponding to the ambient sample.

LED1 convert phase ($CONV_{LED1}$ or $CONV_{IR}$): When this signal is high, the voltage sampled on C_{LED1} is buffered and applied to the ADC for conversion. At the end of the conversion, the ADC provides a single digital code corresponding to the LED1 sample.

8.3.1.4 Receiver Timing

See Figure 37 for a timing diagram detailing the control signals related to the LED on-time, Rx sample time, and the ADC conversion times for each channel. Figure 37 shows the timing for a case where each phase occupies 25% of the pulse repetition period. However, this percentage is not a requirement. In cases where the device is operated with low pulse repetition frequency (PRF) or low LED pulse durations, the active portion of the pulse repetition period can be reduced. Using the dynamic power-down feature, the overall power consumption can be significantly reduced.

Copyright © 2012–2014, Texas Instruments Incorporated

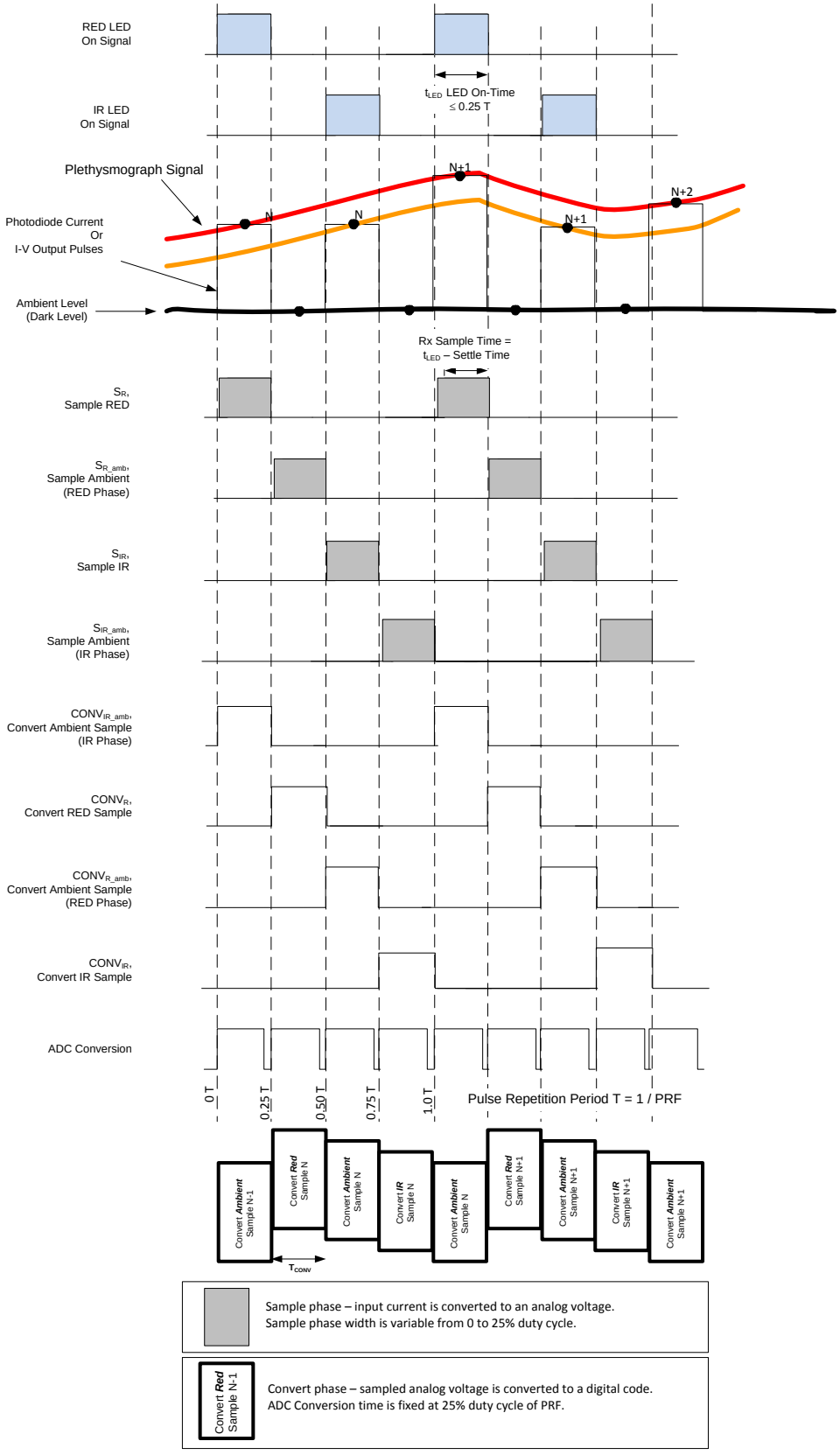

NOTE: Relationship to the AFE4400 EVM is: LED1 = IR and LED2 = RED.

Figure 37. Rx Timing Diagram

Copyright © 2012–2014, Texas Instruments Incorporated

8.3.2 Clocking and Timing Signal Generation

The crystal oscillator generates a master clock signal using an external crystal. In the default mode, a divide-by-2 block converts the 8-MHz clock to 4 MHz, which is used by the AFE to operate the timer modules, ADC, and diagnostics. The 4-MHz clock is buffered and output from the AFE in order to clock an external microcontroller. The clocking functionality is shown in Figure 38.

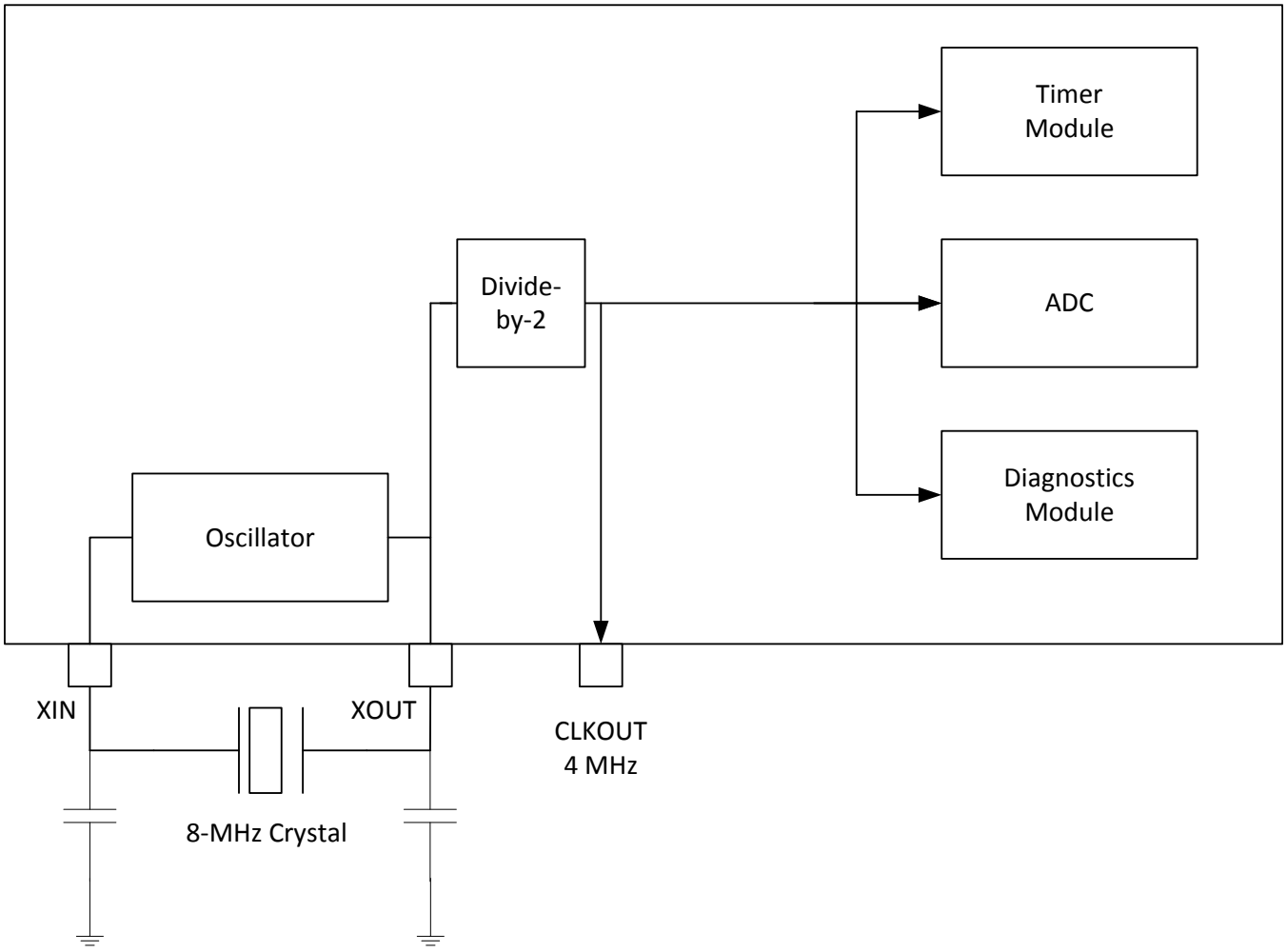

Figure 38. AFE Clocking

8.3.3 Timer Module

See Figure 39 for a timing diagram detailing the various timing edges that are programmable using the timer module. The rising and falling edge positions of 11 signals can be controlled. The module uses a single 16-bit counter (running off of the 4-MHz clock) to set the time-base.

All timing signals are set with reference to the pulse repetition period (PRP). Therefore, a dedicated compare register compares the 16-bit counter value with the reference value specified in the PRF register. Every time that the 16-bit counter value is equal to the reference value in the PRF register, the counter is reset to 0.

Copyright © 2012–2014, Texas Instruments Incorporated

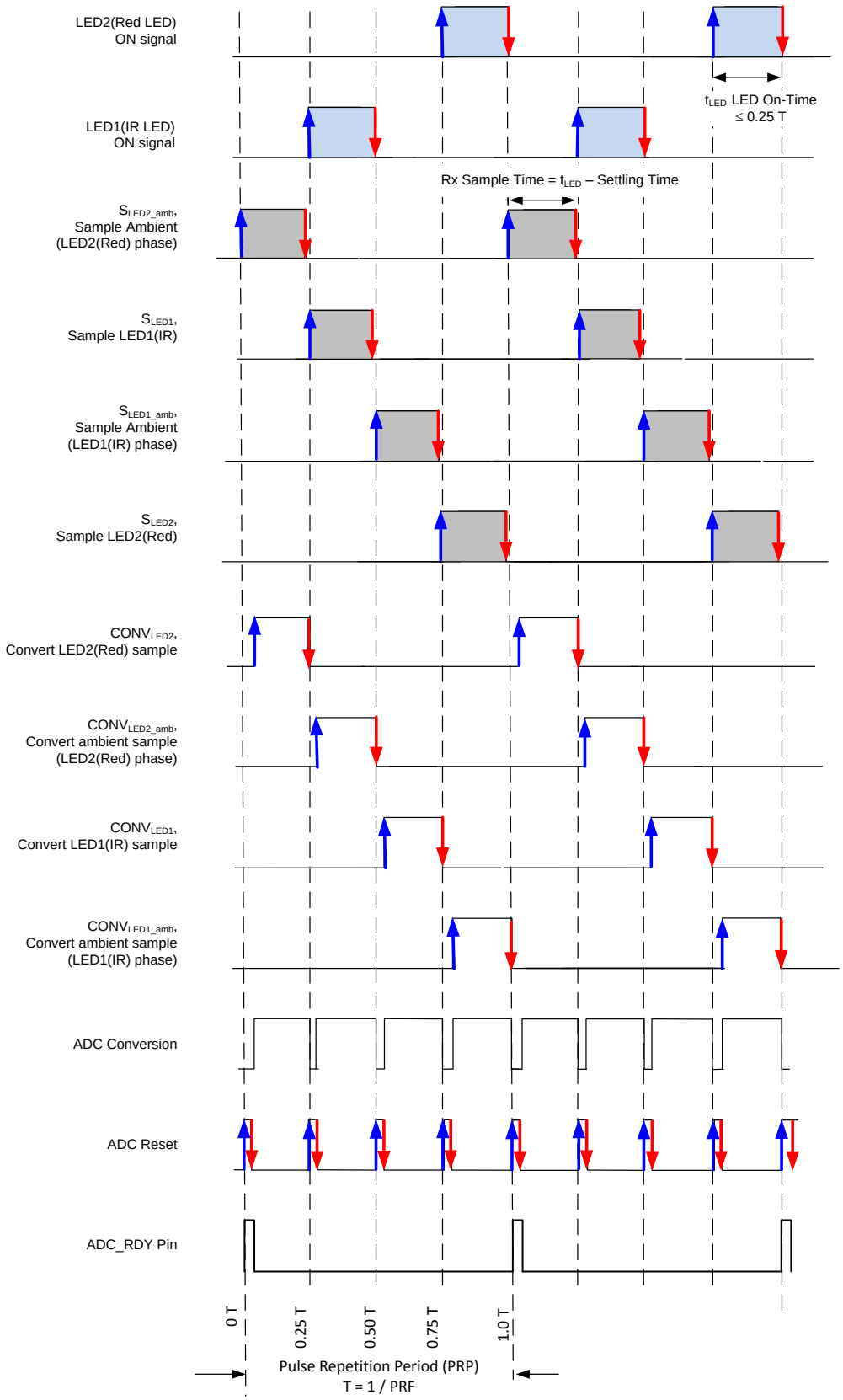

NOTE: Programmable edges are shown in blue and red.

Figure 39. AFE Control Signals

Copyright © 2012–2014, Texas Instruments Incorporated

For the timing signals in Figure 37, the start and stop edge positions are programmable with respect to the PRF period. Each signal uses a separate timer compare module that compares the counter value with preprogrammed reference values for the start and stop edges. All reference values can be set using the SPI interface.

After the counter value has exceeded the stop reference value, the output signal is set. When the counter value equals the stop reference value, the output signal is reset. Figure 40 shows a diagram of the timer compare register. With a 4-MHz clock, the edge placement resolution is 0.25 µs.

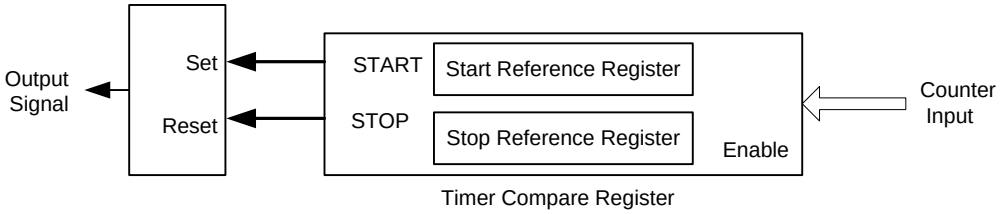

Figure 40. Compare Register

The ADC conversion signal requires four pulses in each PRF clock period. Timer compare register 11 uses four sets of start and stop registers to control the ADC conversion signal, as shown in Figure 41.

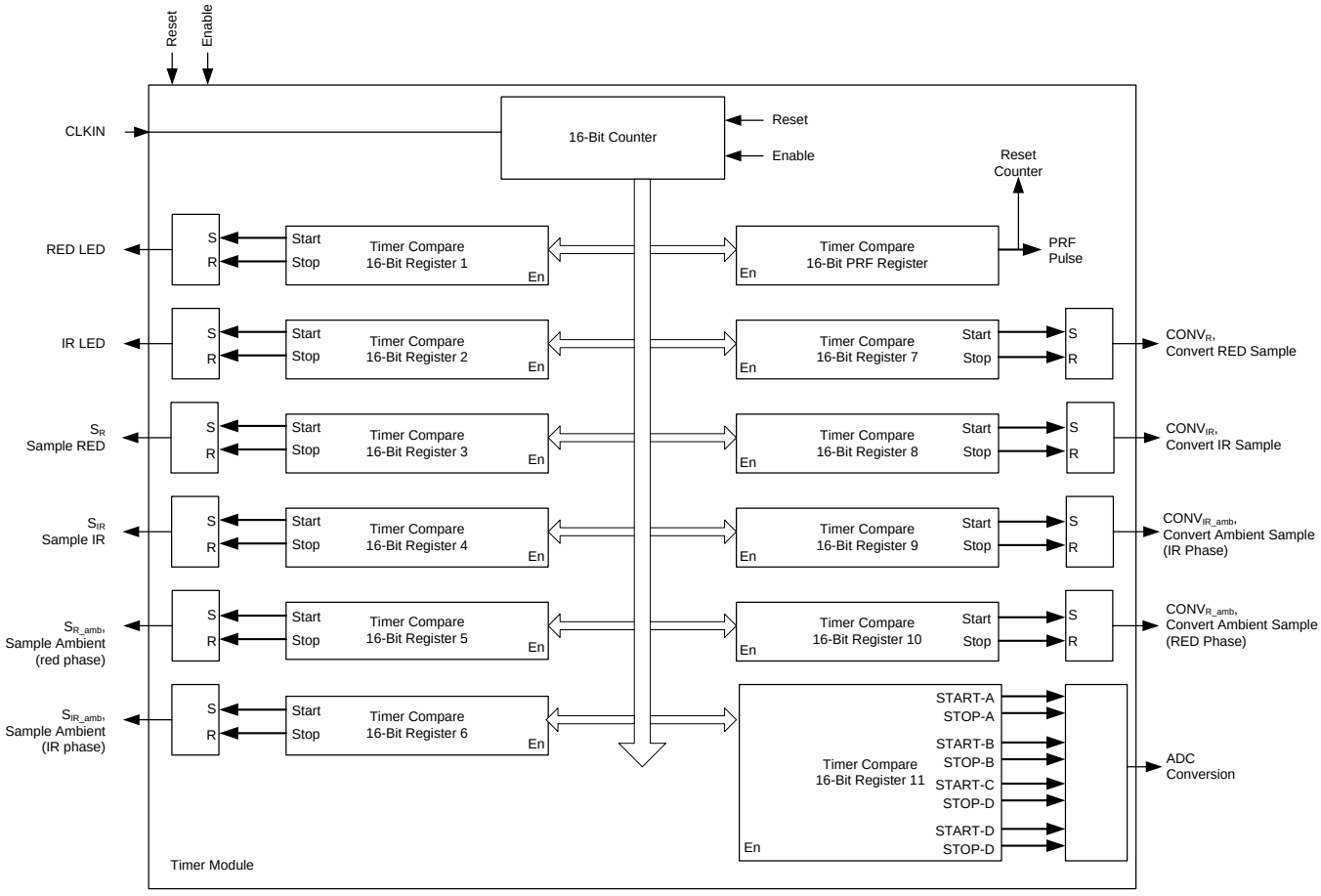

Figure 41. Timer Module

Copyright © 2012–2014, Texas Instruments Incorporated

8.3.3.1 Using the Timer Module

The timer module registers can be used to program the start and end instants in units of 4-MHz clock cycles. These timing instants and the corresponding registers are listed in Table 2.

Note that the device does not restrict the values in these registers; thus, the start and end edges can be positioned anywhere within the pulse repetition period. Care must be taken by the user to program suitable values in these registers to avoid overlapping the signals and to make sure none of the edges exceed the value programmed in the PRP register. Writing the same value in the start and end registers results in a pulse duration of one clock cycle. The following steps describe the timer sequencing configuration:

1. With respect to the start of the PRP period (indicated by timing instant t_0 in Figure 42), the following sequence of conversions must be followed in order: convert LED2 → LED2 ambient → LED1 → LED1 ambient.
2. Also, starting from t_0, the sequence of sampling instants must be staggered with respect to the respective conversions as follows: sample LED2 ambient → LED1 → LED1 ambient → LED2.
3. Finally, align the edges for the two LED pulses with the respective sampling instants.

Table 2. Clock Edge Mapping to SPI Registers

TIME INSTANT (See Figure 42 and Figure 43)	DESCRIPTION	CORRESPONDING REGISTER ADDRESS AND REGISTER BITS	EXAMPLE(1) (Decimal)
t_0	Start of pulse repetition period	No register control	—
t_1	Start of sample LED2 pulse	LED2STC[15:0], register 01h	6050
t_2	End of sample LED2 pulse	LED2ENDC[15:0], register 02h	7998
t_3	Start of LED2 pulse	LED2LEDSTC[15:0], register 03h	6000
t_4	End of LED2 pulse	LED2LEDENDC[15:0], register 04h	7999
t_5	Start of sample LED2 ambient pulse	ALED2STC[15:0], register 05h	50
t_6	End of sample LED2 ambient pulse	ALED2ENDC[15:0], register 06h	1998
t_7	Start of sample LED1 pulse	LED1STC[15:0], register 07h	2050
t_8	End of sample LED1 pulse	LED1ENDC[15:0], register 08h	3998
t_9	Start of LED1 pulse	LED1LEDSTC[15:0], register 09h	2000
t_{10}	End of LED1 pulse	LED1LEDENDC[15:0], register 0Ah	3999
t_{11}	Start of sample LED1 ambient pulse	ALED1STC[15:0], register 0Bh	4050
t_{12}	End of sample LED1 ambient pulse	ALED1ENDC[15:0], register 0Ch	5998
t_{13}	Start of convert LED2 pulse	LED2CONVST[15:0], register 0Dh Must start one AFE clock cycle after the ADC reset pulse ends.	4
t_{14}	End of convert LED2 pulse	LED2CONVEND[15:0], register 0Eh	1999
t_{15}	Start of convert LED2 ambient pulse	ALED2CONVST[15:0], register 0Fh Must start one AFE clock cycle after the ADC reset pulse ends.	2004
t_{16}	End of convert LED2 ambient pulse	ALED2CONVEND[15:0], register 10h	3999
t_{17}	Start of convert LED1 pulse	LED1CONVST[15:0], register 11h Must start one AFE clock cycle after the ADC reset pulse ends.	4004
t_{18}	End of convert LED1 pulse	LED1CONVEND[15:0], register 12h	5999
t_{19}	Start of convert LED1 ambient pulse	ALED1CONVST[15:0], register 13h Must start one AFE clock cycle after the ADC reset pulse ends.	6004
t_{20}	End of convert LED1 ambient pulse	ALED1CONVEND[15:0], register 14h	7999
t_{21}	Start of first ADC conversion reset pulse	ADCRSTSTCT0[15:0], register 15h	0
t_{22}	End of first ADC conversion reset pulse(2)	ADCRSTENDCT0[15:0], register 16h	3
t_{23}	Start of second ADC conversion reset pulse	ADCRSTSTCT1[15:0], register 17h	2000
t_{24}	End of second ADC conversion reset pulse(2)	ADCRSTENDCT1[15:0], register 18h	2003
t_{25}	Start of third ADC conversion reset pulse	ADCRSTSTCT2[15:0], register 19h	4000
t_{26}	End of third ADC conversion reset pulse(2)	ADCRSTENDCT2[15:0], register 1Ah	4003
t_{27}	Start of fourth ADC conversion reset pulse	ADCRSTSTCT3[15:0], register 1Bh	6000
t_{28}	End of fourth ADC conversion reset pulse(2)	ADCRSTENDCT3[15:0], register 1Ch	6003
t_{29}	End of pulse repetition period	PRPCOUNT[15:0], register 1Dh	7999

(1) Values are based off of a pulse repetition frequency (PRF) = 500 Hz and duty cycle = 25%.
(2) See Figure 43, note 2 for the effect of the ADC reset time crosstalk.

Copyright © 2012–2014, Texas Instruments Incorporated

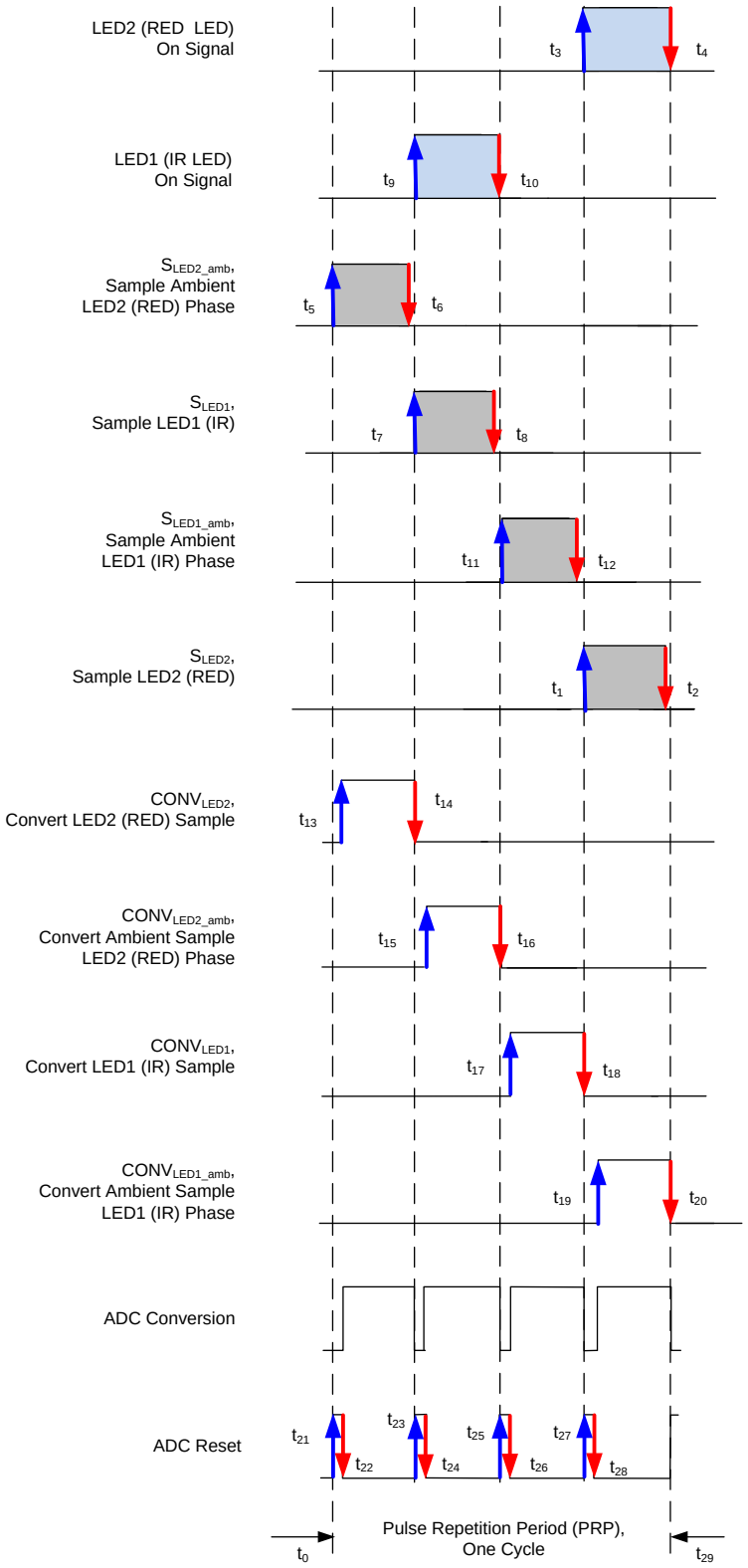

(1) RED = LED2, IR = LED1.

(2) A low ADC reset time can result in a small component of the LED signal leaking into the ambient phase. With an ADC reset of two clock cycles, a –60-dB leakage is expected. In many cases, this leakage does not affect system performance. However, if this crosstalk must be completely eliminated, a longer ADC reset time of approximately six clock cycles is recommended for t_{22}, t_{24}, t_{26}, and t_{28}.

Figure 42. Programmable Clock Edges(1)(2)

Copyright © 2012–2014, Texas Instruments Incorporated

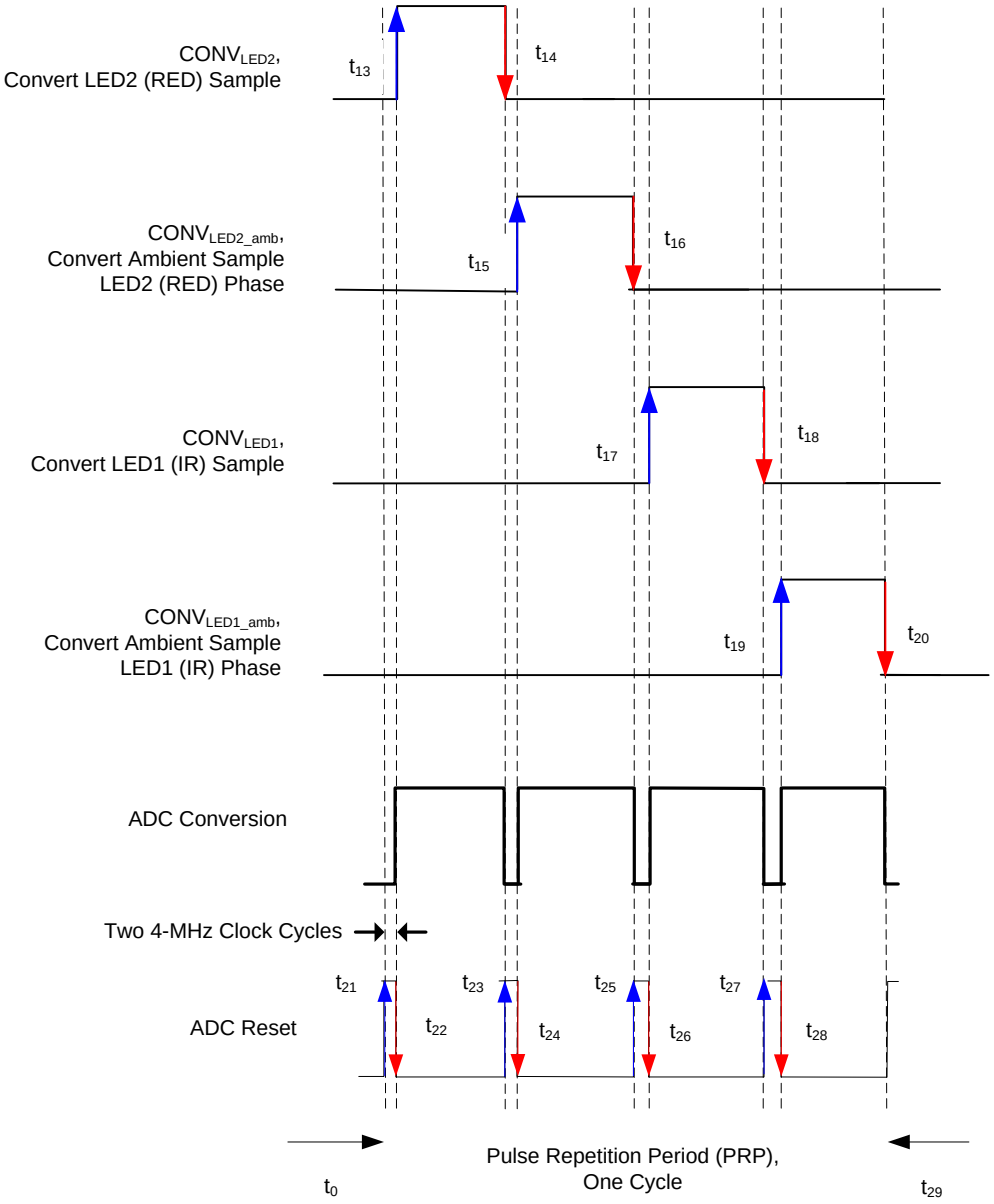

(1) RED = LED2, IR = LED1.

(2) A low ADC reset time can result in a small component of the LED signal leaking into the ambient phase. With an ADC reset of two clock cycles, a –60-dB leakage is expected. In many cases, this leakage does not affect system performance. However, if this crosstalk must be completely eliminated, a longer ADC reset time of approximately six clock cycles is recommended for t_{22}, t_{24}, t_{26}, and t_{28}.

Figure 43. Relationship Between the ADC Reset and ADC Conversion Signals(1)(2)

Copyright © 2012–2014, Texas Instruments Incorporated

8.3.4 Receiver Subsystem Power Path

The block diagram in Figure 44 shows the AFE4400 Rx subsystem power routing. Internal LDOs running off RX_ANA_SUP and RX_DIG_SUP generate the 1.8-V supplies required to drive the internal blocks. The two receive supplies could be shorted to a single supply on the board.

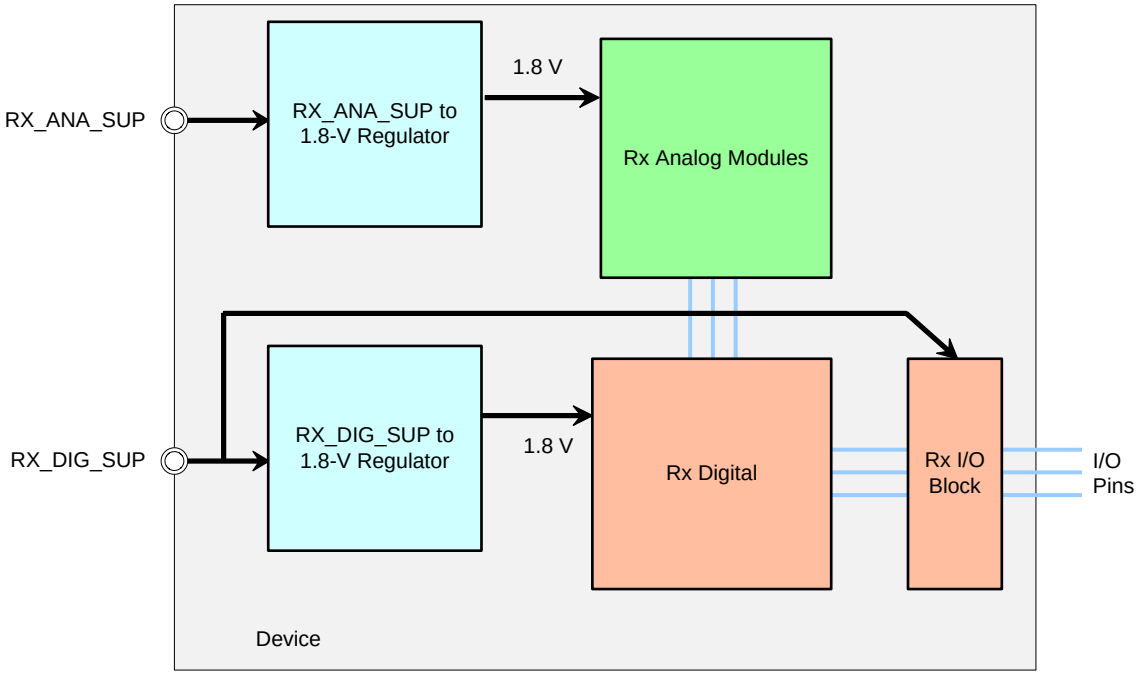

Figure 44. Receive Subsystem Power Routing

8.3.5 Transmit Section

The transmit section integrates the LED driver and the LED current control section with 8-bit resolution. This integration is designed to meet a dynamic range of better than 105 dB (based on a 1-sigma LED current noise).

The RED and IR LED reference currents can be independently set. The current source (I_{LED}) locally regulates and ensures that the actual LED current tracks the specified reference. The transmitter section uses an internal 0.5-V reference voltage for operation. This reference voltage is available on the REF_TX pin and must be decoupled to ground with a 2.2-µF capacitor. The TX_REF voltage is derived from the TX_CTRL_SUP. The maximum LED current setting supports up to 50-mA LED current.

Note that reducing the value of the band-gap reference capacitor on pin 7 reduces the time required for the device to wake-up and settle. However, this reduction in time is a trade-off between wake-up time and noise performance.

The minimum LED_DRV_SUP voltage required for operation depends on:

- Voltage drop across the LED (V_{LED}),
- Voltage drop across the external cable, connector, and any other component in series with the LED (V_{CABLE}), and
- Transmitter reference voltage.

Using the internal 0.5-V reference voltage, the minimum LED_DRV_SUP voltage can be as low as 3.0 V, provided that [3.0 V – (VLED + VCABLE) > 1.4 V] is met.

See the Recommended Operating Conditions table for further details.

Two LED driver schemes are supported:

- An H-bridge drive for a two-terminal back-to-back LED package; see Figure 45.
- A push-pull drive for a three-terminal LED package; see Figure 46.

Copyright © 2012–2014, Texas Instruments Incorporated

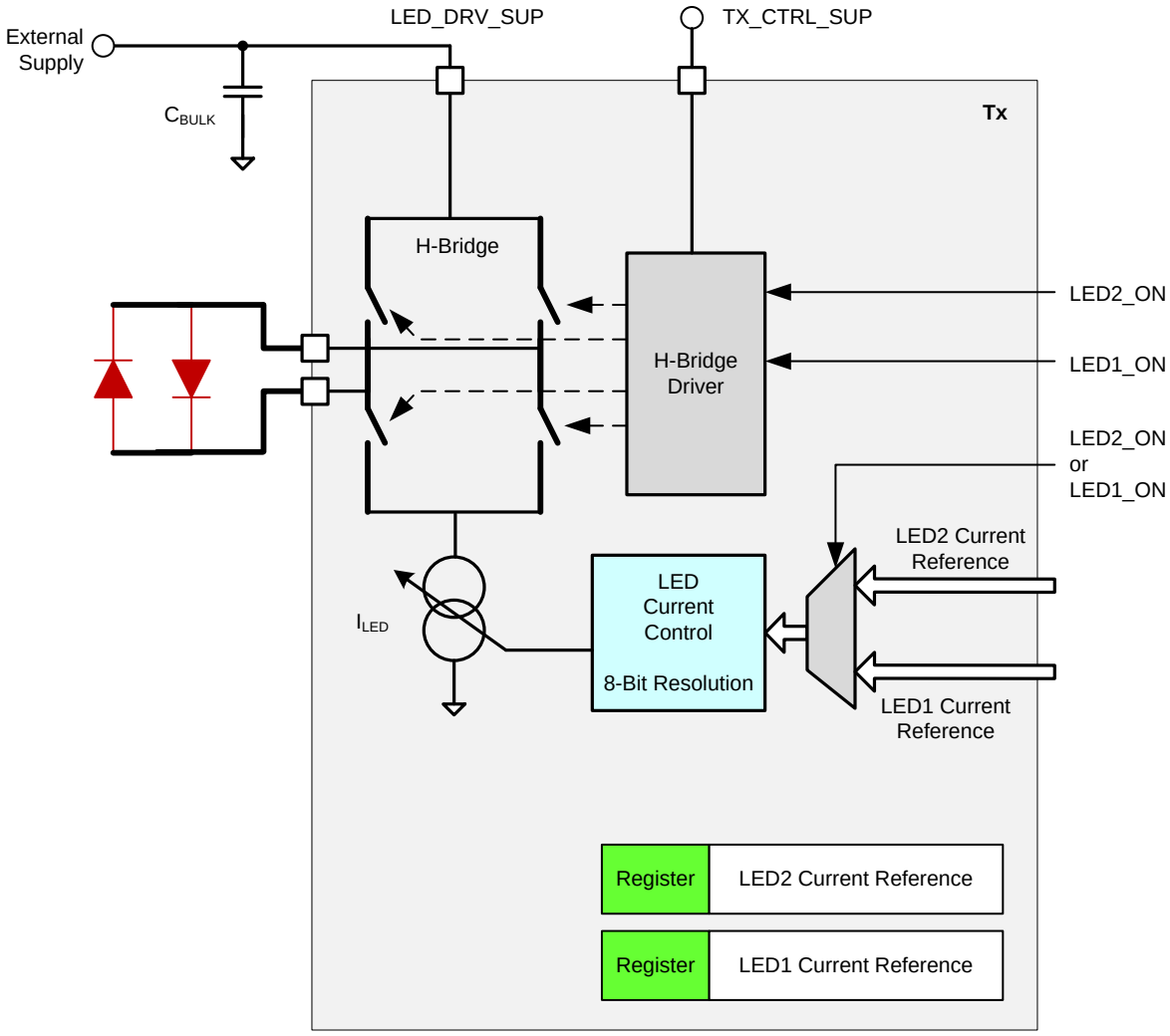

Figure 45. Transmit: H-Bridge Drive

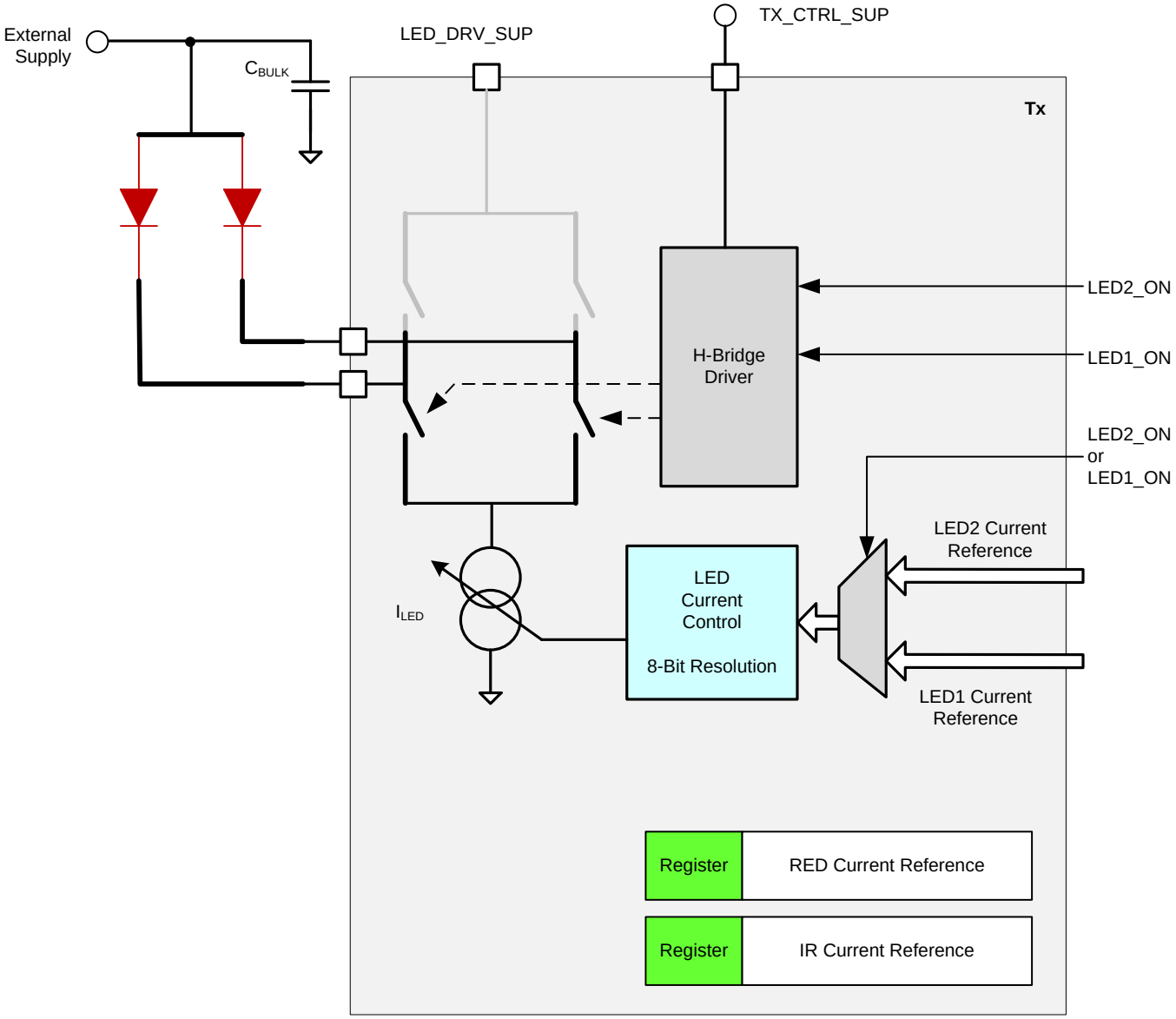

Figure 46. Transmit: Push-Pull LED Drive for Common Anode LED Configuration

Copyright © 2012–2014, Texas Instruments Incorporated

8.3.5.1 Transmitter Power Path

The block diagram in Figure 47 shows the AFE4400 Tx subsystem power routing.

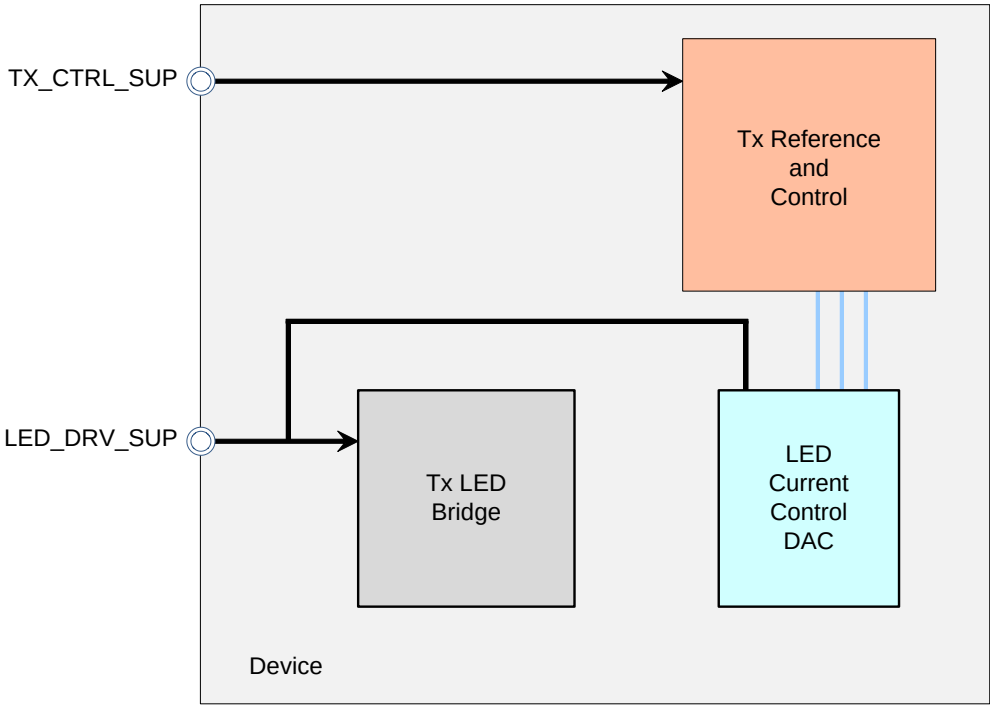

Figure 47. Transmit Subsystem Power Routing

8.3.5.2 LED Power Reduction During Periods of Inactivity

The diagram in Figure 48 shows how LED bias current passes 50 µA whenever LED_ON occurs. In order to minimize power consumption in periods of inactivity, the LED_ON control must be turned off. Furthermore, the TIMEREN bit in the CONTROL1 register should be disabled by setting the value to 0.

Note that depending on the LEDs used, the LED may sometimes appear dimly lit even when the LED current is set to 0 mA. This appearance is because of the switching leakage currents (as shown in Figure 48) inherent to the timer function. The dimmed appearance does not effect the ambient light level measurement because during the ambient cycle, LED_ON is turned off for the duration of the ambient measurement.

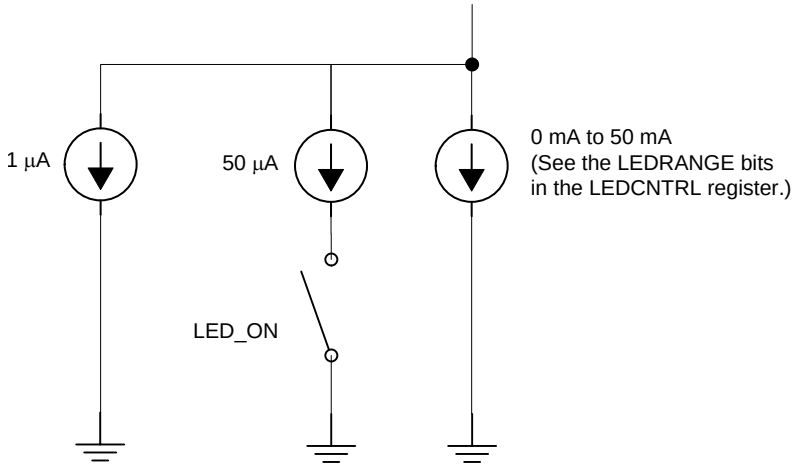

Figure 48. LED Bias Current

8.4 Device Functional Modes

8.4.1 ADC Operation and Averaging Module

After the falling edge of the ADC reset signal, the ADC conversion phase starts (refer to Figure 43). Each ADC conversion takes 50 µs.

The ADC operates with averaging. The averaging module averages multiple ADC samples and reduces noise to improve dynamic range. Figure 49 shows a diagram of the averaging module. The ADC output format is in 22-bit twos complement, as shown in Figure 50. The two MSB bits of the 24-bit data can be ignored.

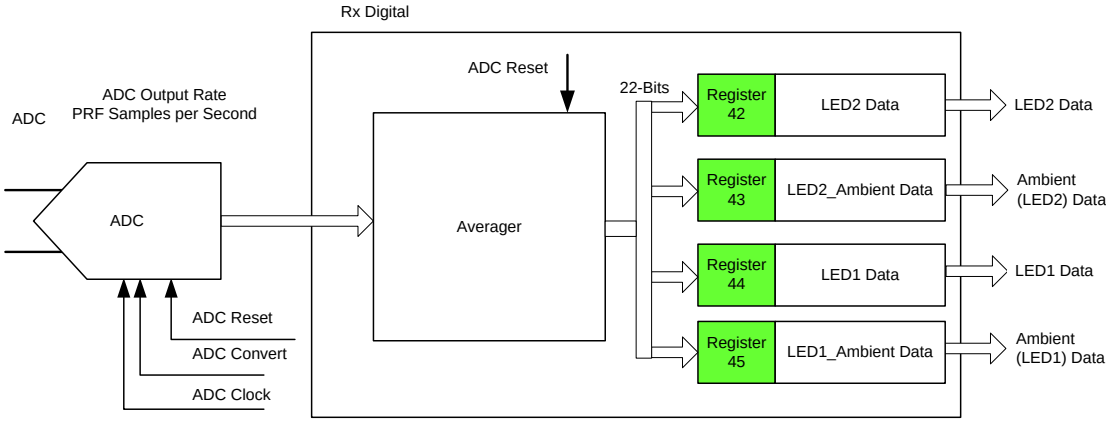

Figure 49. Averaging Module

Figure 50. 22-Bit Word

23	22	21	20	19	18	17	16	15	14	13	12
Ignore						22-Bit ADC Code, MSB to LSB					
11	10	9	8	7	6	5	4	3	2	1	0
22-Bit ADC Code, MSB to LSB											

Table 3 shows the mapping of the input voltage to the ADC to its output code.

Table 3. ADC Input Voltage Mapping

DIFFERENTIAL INPUT VOLTAGE AT ADC INPUT	22-BIT ADC OUTPUT CODE
–1.2 V	1000000000000000000000
(–1.2 / 2^{21}) V	1111111111111111111111
0	0000000000000000000000
(1.2 / 2^{21}) V	0000000000000000000001
1.2 V	0111111111111111111111

The data format is binary twos complement format, MSB-first. Because the TIA has a full-scale range of ±1 V, TI recommends that the input to the ADC does not exceed ±1 V, which is approximately 80% of its full-scale.

In cases where having the processor read the data as a 24-bit word instead of a 22-bit word is more convenient, the entire register can be mapped to the input level as shown in Figure 51.

Figure 51. 24-Bit Word

23	22	21	20	19	18	17	16	15	14	13	12	11	10	9	8	7	6	5	4	3	2	1	0
24-Bit ADC Code, MSB to LSB																							

Copyright © 2012–2014, Texas Instruments Incorporated

Table 4 shows the mapping of the input voltage to the ADC to its output code when the entire 24-bit word is considered.

Table 4. Input Voltage Mapping

DIFFERENTIAL INPUT VOLTAGE AT ADC INPUT	24-BIT ADC OUTPUT CODE
–1.2 V	111000000000000000000000
$(-1.2 / 2^{21})$ V	111111111111111111111111
0	000000000000000000000000
$(1.2 / 2^{21})$ V	000000000000000000000001
1.2 V	000111111111111111111111

Now the data can be considered as a 24-bit data in binary twos complement format, MSB-first. The advantage of using the entire 24-bit word is that the ADC output is correct, even when the input is over the normal operating range.

8.4.1.1 Operation

The ADC digital samples are accumulated and averaged after every 50 µs. Then, at the next rising edge of the ADC reset signal, the average value (22-bit) is written into the output registers sequentially as follows (see Figure 52):

- At the 25% reset signal, the averaged 22-bit word is written to register 2Ah.
- At the 50% reset signal, the averaged 22-bit word is written to register 2Bh.
- At the 75% reset signal, the averaged 22-bit word is written to register 2Ch.
- At the next 0% reset signal, the averaged 22-bit word is written to register 2Dh. The contents of registers 2Ah and 2Bh are written to register 2Eh and the contents of registers 2Ch and 2Dh are written to register 2Fh.

At the rising edge of the ADC_RDY signal, the contents of all six result registers can be read out.

The number of samples to be used per conversion phase is preset to 2.

Copyright © 2012–2014, Texas Instruments Incorporated

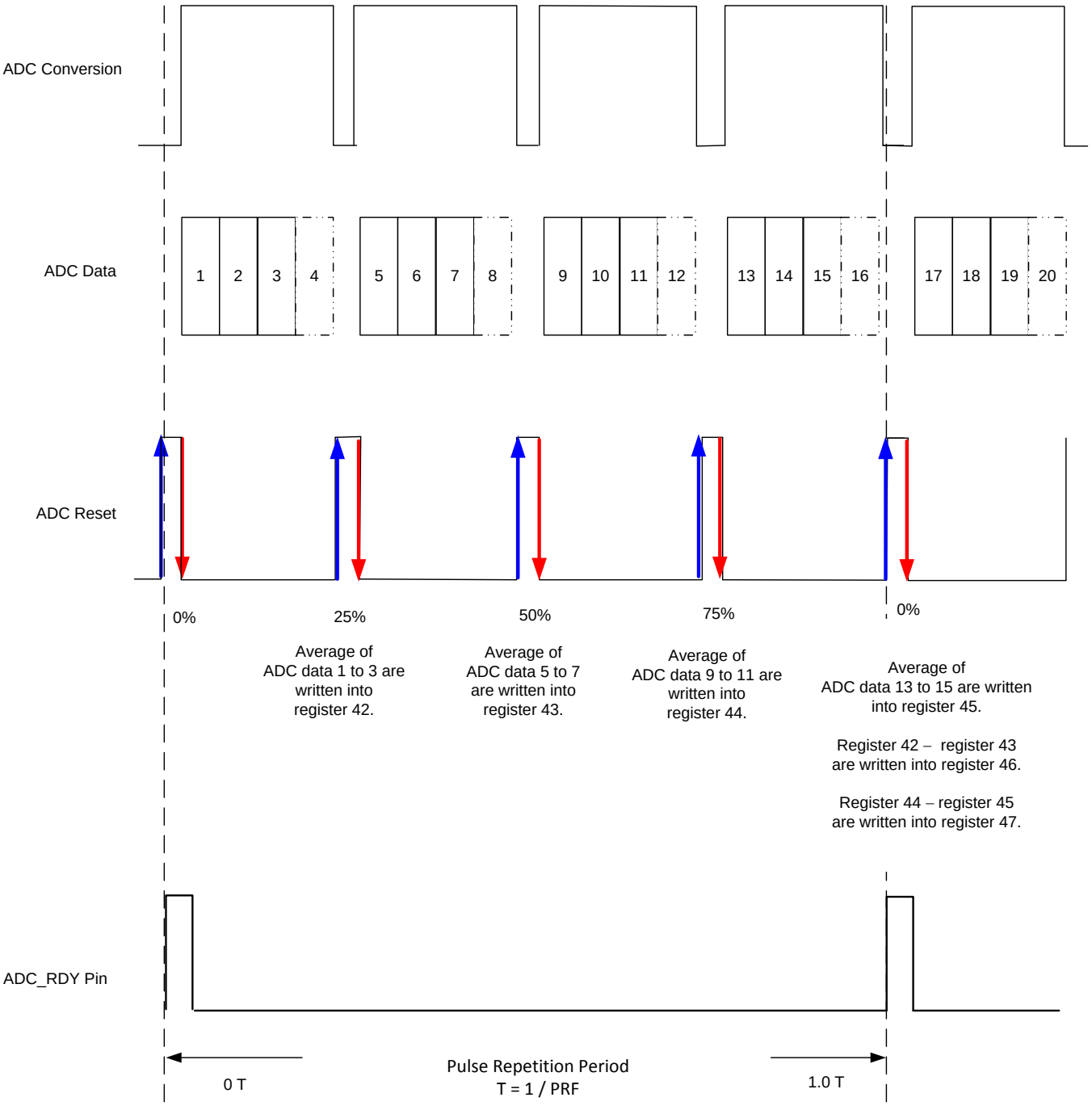

NOTE: This example shows three data averages.

Figure 52. ADC Data with Averaging

Copyright © 2012–2014, Texas Instruments Incorporated

8.4.2 Diagnostics

The device includes diagnostics to detect open or short conditions of the LED and photosensor, LED current profile feedback, and cable on or off detection.

8.4.2.1 Photodiode-Side Fault Detection

Figure 53 shows the diagnostic for the photodiode-side fault detection.

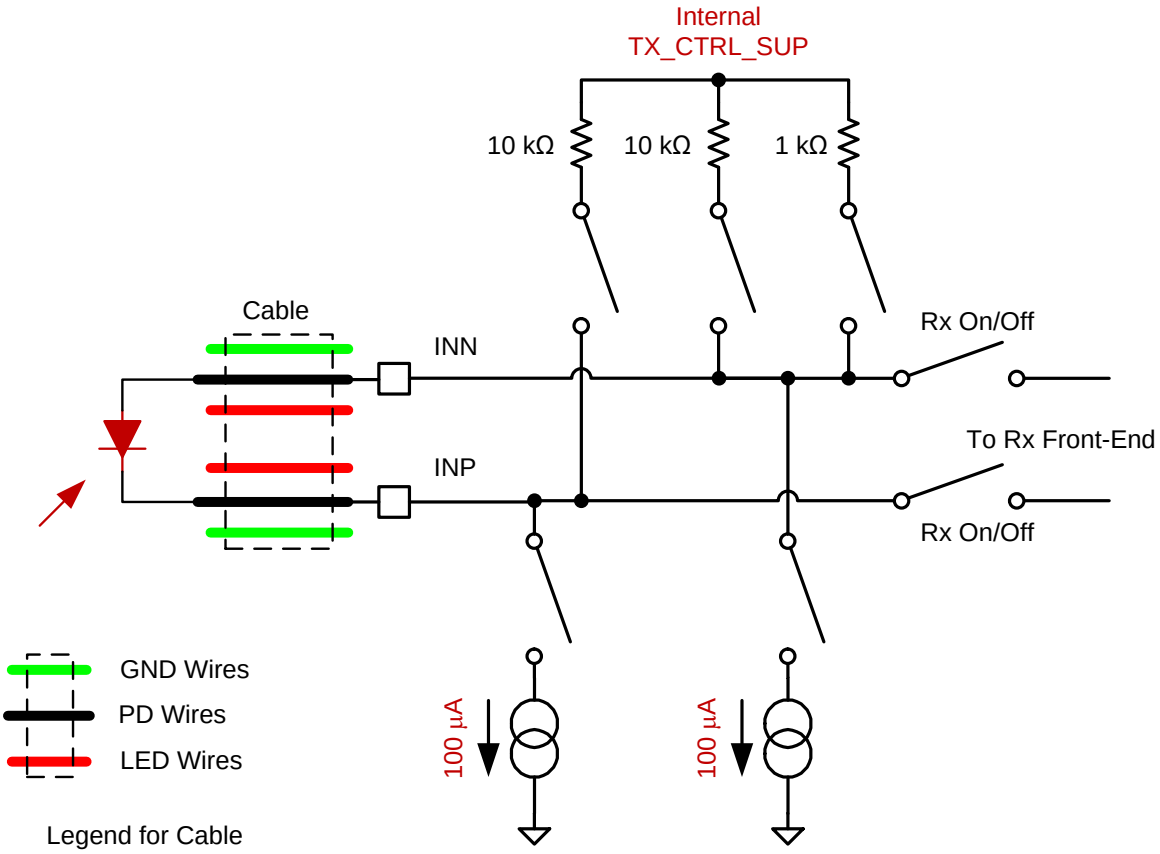

Figure 53. Photodiode Diagnostic

8.4.2.2 Transmitter-Side Fault Detection

Figure 54 shows the diagnostic for the transmitter-side fault detection.

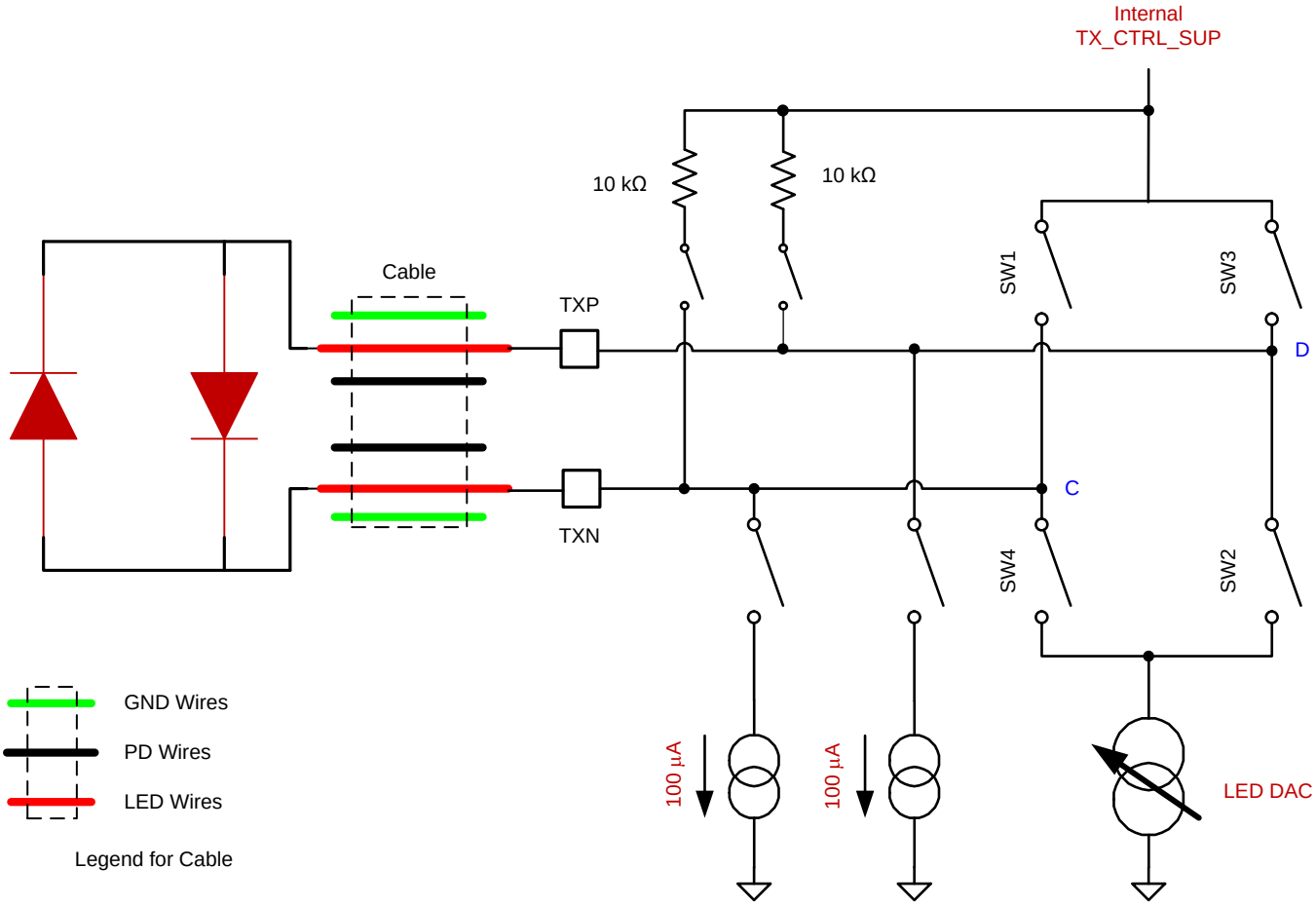

Figure 54. Transmitter Diagnostic

Copyright © 2012–2014, Texas Instruments Incorporated

8.4.2.3 Diagnostics Module

The diagnostics module, when enabled, checks for nine types of faults sequentially. The results of all faults are latched in 11 separate flags.

At the end of the sequence, the state of the 11 flags are combined to generate two interrupt signals: PD_ALM for photodiode-related faults and LED_ALM for transmit-related faults.

The status of all flags can also be read using the SPI interface. Table 5 details each fault and flag used. Note that the diagnostics module requires all AFE blocks to be enabled in order to function reliably.

Table 5. Fault and Flag Diagnostics(1)

MODULE	SEQ.	FAULT	FLAG1	FLAG2	FLAG3	FLAG4	FLAG5	FLAG6	FLAG7	FLAG8	FLAG9	FLAG10	FLAG11
—	—	No fault	0	0	0	0	0	0	0	0	0	0	0
PD	1	Rx INP cable shorted to LED cable	1										
	2	Rx INN cable shorted to LED cable		1									
	3	Rx INP cable shorted to GND cable			1								
	4	Rx INN cable shorted to GND cable				1							
	5	PD open or shorted					1	1					
LED	6	Tx OUTM line shorted to GND cable							1				
	7	Tx OUTP line shorted to GND cable								1			
	8	LED open or shorted									1	1	
	9	LED open or shorted											1

(1) Resistances below 10 kΩ are considered to be shorted.

Copyright © 2012–2014, Texas Instruments Incorporated

Figure 55 shows the timing for the diagnostic function.

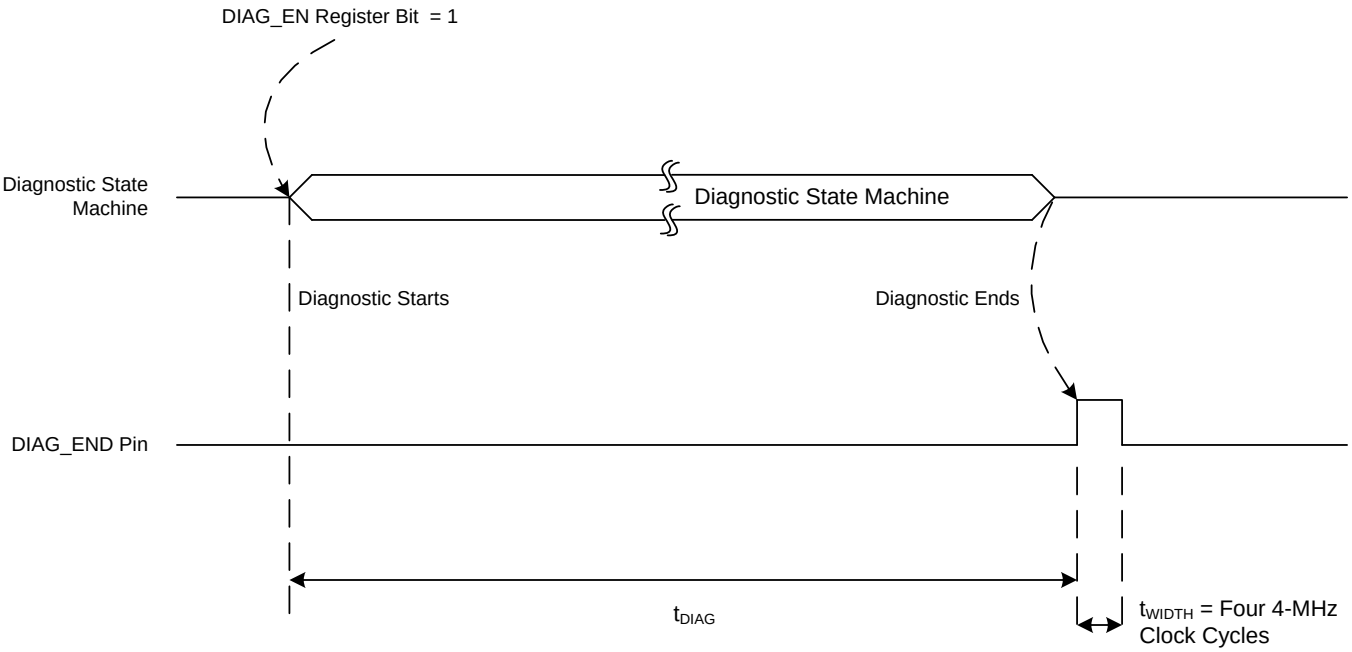

Figure 55. Diagnostic Timing Diagram

By default, the diagnostic function takes t_{DIAG} = 16 ms to complete. After the diagnostics function completes, the AFE4400 filter must be allowed time to settle. See the *Electrical Characteristics* for the filter settling time.

8.5 Programming

8.5.1 Serial Programming Interface

The SPI-compatible serial interface consists of four signals: SCLK (serial clock), SPISOMI (serial interface data output), SPISIMO (serial interface data input), and SPISTE (serial interface enable).

The serial clock (SCLK) is the serial peripheral interface (SPI) serial clock. SCLK shifts in commands and shifts out data from the device. SCLK features a Schmitt-triggered input and clocks data out on the SPISOMI. Data are clocked in on the SPISIMO pin. Even though the input has hysteresis, TI recommends keeping SCLK as clean as possible to prevent glitches from accidentally shifting the data. When the serial interface is idle, hold SCLK low.

The SPI serial out master in (SPISOMI) pin is used with SCLK to clock out the AFE4400 data. The SPI serial in master out (SPISIMO) pin is used with SCLK to clock in data to the AFE4400. The SPI serial interface enable (SPISTE) pin enables the serial interface to clock data on the SPISIMO pin in to the device.

8.5.2 Reading and Writing Data

The device has a set of internal registers that can be accessed by the serial programming interface formed by the SPISTE, SCLK, SPISIMO, and SPISOMI pins.

8.5.2.1 Writing Data

The SPI_READ register bit must be first set to 0 before writing to a register. When SPISTE is low:

- Serially shifting bits into the device is enabled.
- Serial data (on the SPISIMO pin) are latched at every SCLK rising edge.
- The serial data are loaded into the register at every 32nd SCLK rising edge.

Copyright © 2012–2014, Texas Instruments Incorporated

Programming (continued)

In case the word length exceeds a multiple of 32 bits, the excess bits are ignored. Data can be loaded in multiples of 32-bit words within a single active SPISTE pulse. The first eight bits form the register address and the remaining 24 bits form the register data. Figure 56 shows an SPI timing diagram for a single write operation. For multiple read and write cycles, refer to the *Multiple Data Reads and Writes* section.

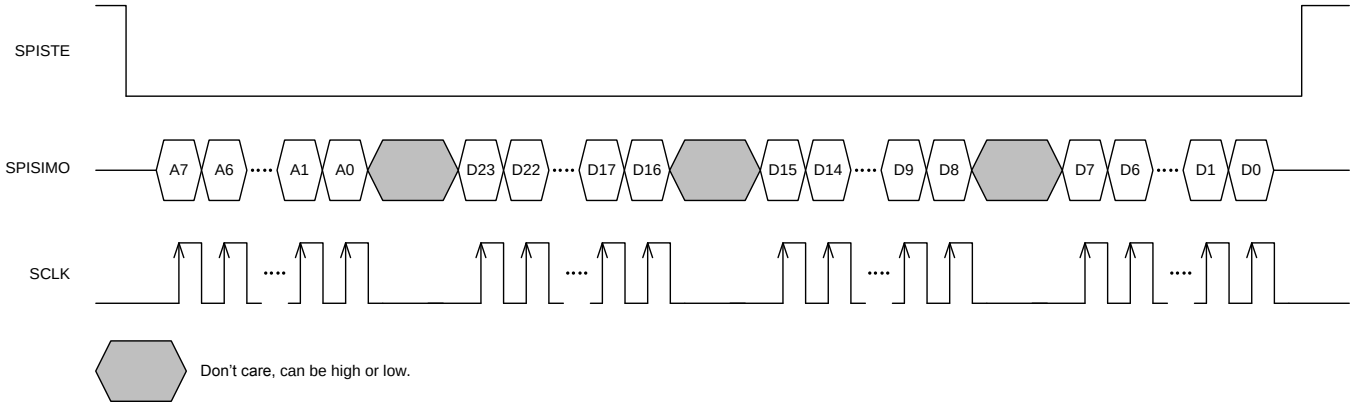

Figure 56. AFE SPI Write Timing Diagram

Copyright © 2012–2014, Texas Instruments Incorporated

Programming (continued)

8.5.2.2 Reading Data

The SPI_READ register bit must be first set to 1 before reading from a register. The AFE4400 includes a mode where the contents of the internal registers can be read back on the SPISOMI pin. This mode may be useful as a diagnostic check to verify the serial interface communication between the external controller and the AFE. To enable this mode, first set the SPI_READ register bit using the SPI write command, as described in the *Writing Data* section. In the next command, specify the SPI register address with the desired content to be read. Within the same SPI command sequence, the AFE outputs the contents of the specified register on the SPISOMI pin. Figure 57 shows an SPI timing diagram for a single read operation. For multiple read and write cycles, refer to the *Multiple Data Reads and Writes* section.

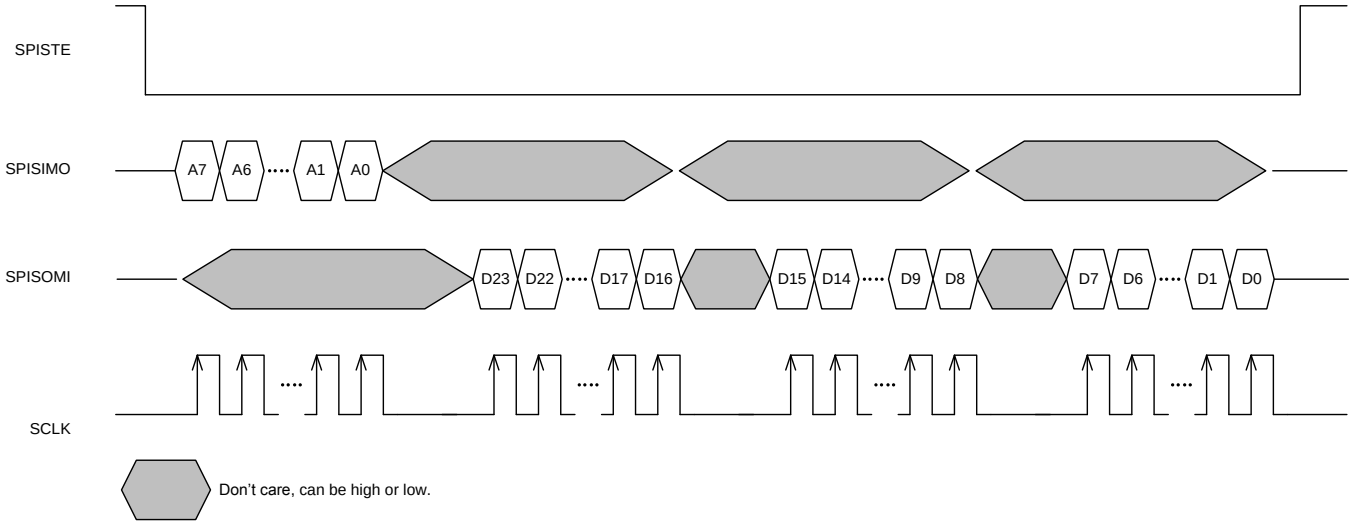

(1) The SPI_READ register bit must be enabled before attempting a serial readout from the AFE.

(2) Specify the register address of the content that must be readback on bits A[7:0].

(3) The AFE outputs the contents of the specified register on the SPISOMI pin.

Figure 57. AFE SPI Read Timing Diagram

Copyright © 2012–2014, Texas Instruments Incorporated

8.5.2.3 Multiple Data Reads and Writes

The device includes functionality where multiple read and write operations can be performed during a single SPISTE event. To enable this functionality, the first eight bits determine the register address to be written and the remaining 24 bits determine the register data. Perform two writes with the SPI read bit enabled during the second write operation in order to prepare for the read operation, as described in the *Writing Data* section. In the next command, specify the SPI register address with the desired content to be read. Within the same SPI command sequence, the AFE outputs the contents of the specified register on the SPISOMI pin. This functionality is described in the *Writing Data* and *Reading Data* sections. Figure 58 shows a timing diagram for the SPI multiple read and write operations.

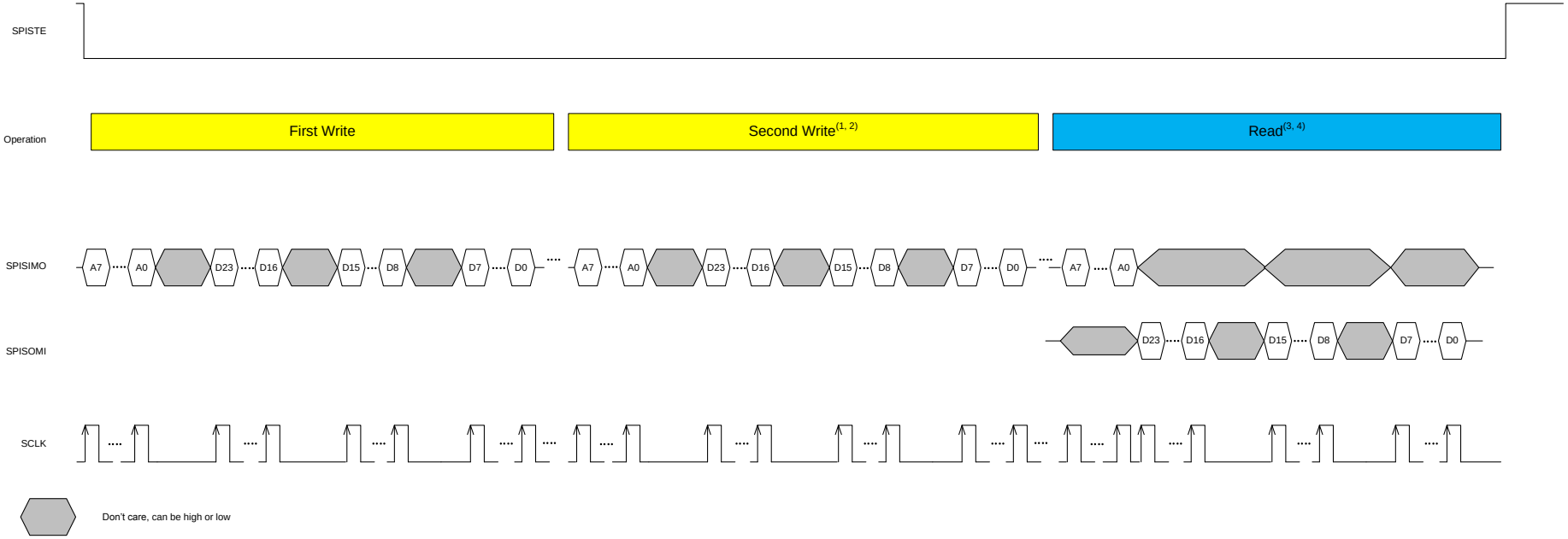

(1) The SPI read register bit must be enabled before attempting a serial readout from the AFE.

(2) The second write operation must be configured for register 0 with data 000001h.

(3) Specify the register address whose contents must be read back on A[7:0].

(4) The AFE outputs the contents of the specified register on the SPISOMI pin.

Figure 58. Serial Multiple Read and Write Operations

Copyright © 2012–2014, Texas Instruments Incorporated

8.5.2.4 Register Initialization

After power-up, the internal registers **must** be initialized to the default values. This initialization can be done in one of two ways:

- Through a hardware reset by applying a low-going pulse on the $\overline{\text{RESET}}$ pin, or
- By applying a software reset. Using the serial interface, set SW_RESET (bit D3 in register 00h) high. This setting initializes the internal registers to the default values and then self-resets to 0. In this case, the $\overline{\text{RESET}}$ pin is kept high (inactive).

8.5.2.5 AFE SPI Interface Design Considerations

Note that when the AFE4400 is deselected, the SPISOMI, CLKOUT, ADC_RDY, PD_ALM, LED_ALM, and DIAG_END digital output pins do not enter a 3-state mode. This condition, therefore, must be taken into account when connecting multiple devices to the SPI port and for power-management considerations. In order to avoid loading the SPI bus when multiple devices are connected, the DIGOUT_TRISTATE register bit must be to 1 whenever the AFE SPI is inactive.

Copyright © 2012–2014, Texas Instruments Incorporated

8.6 Register Maps

8.6.1 AFE Register Map

The AFE consists of a set of registers that can be used to configure it, such as receiver timings, I-V amplifier settings, transmit LED currents, and so forth. The registers and their contents are listed in Table 6. These registers can be accessed using the AFE SPI interface.

Table 6. AFE Register Map

NAME	REGISTER CONTROL(1)	ADDRESS		REGISTER DATA																						
		Hex	Dec	23	22	21	20	19	18	17	16	15	14	13	12	11	10	9	8	7	6	5	4	3	2	1	0
CONTROL0	W	00	0	0	0	0	0	0	0	0	0	0	0	0	0	0	0	0	0	0	0	0	0	SW_RST	DIAG_EN	TIM_COUNT_RST	SPI_READ
LED2STC	R/W	01	1	0	0	0	0	0	0	0	0	LED2STC[15:0]															
LED2ENDC	R/W	02	2	0	0	0	0	0	0	0	0	LED2ENDC[15:0]															
LED2LEDSTC	R/W	03	3	0	0	0	0	0	0	0	0	LED2LEDSTC[15:0]															
LED2LEDENDC	R/W	04	4	0	0	0	0	0	0	0	0	LED2LEDENDC[15:0]															
ALED2STC	R/W	05	5	0	0	0	0	0	0	0	0	ALED2STC[15:0]															
ALED2ENDC	R/W	06	6	0	0	0	0	0	0	0	0	ALED2ENDC[15:0]															
LED1STC	R/W	07	7	0	0	0	0	0	0	0	0	LED1STC[15:0]															
LED1ENDC	R/W	08	8	0	0	0	0	0	0	0	0	LED1ENDC[15:0]															
LED1LEDSTC	R/W	09	9	0	0	0	0	0	0	0	0	LED1LEDSTC[15:0]															
LED1LEDENDC	R/W	0A	10	0	0	0	0	0	0	0	0	LED1LEDENDC[15:0]															
ALED1STC	R/W	0B	11	0	0	0	0	0	0	0	0	ALED1STC[15:0]															
ALED1ENDC	R/W	0C	12	0	0	0	0	0	0	0	0	ALED1ENDC[15:0]															
LED2CONVST	R/W	0D	13	0	0	0	0	0	0	0	0	LED2CONVST[15:0]															
LED2CONVEND	R/W	0E	14	0	0	0	0	0	0	0	0	LED2CONVEND[15:0]															
ALED2CONVST	R/W	0F	15	0	0	0	0	0	0	0	0	ALED2CONVST[15:0]															
ALED2CONVEND	R/W	10	16	0	0	0	0	0	0	0	0	ALED2CONVEND[15:0]															
LED1CONVST	R/W	11	17	0	0	0	0	0	0	0	0	LED1CONVST[15:0]															
LED1CONVEND	R/W	12	18	0	0	0	0	0	0	0	0	LED1CONVEND[15:0]															
ALED1CONVST	R/W	13	19	0	0	0	0	0	0	0	0	ALED1CONVST[15:0]															
ALED1CONVEND	R/W	14	20	0	0	0	0	0	0	0	0	ALED1CONVEND[15:0]															
ADCRSTSTCT0	R/W	15	21	0	0	0	0	0	0	0	0	ADCRSTCT0[15:0]															
ADCRSTENDCT0	R/W	16	22	0	0	0	0	0	0	0	0	ADCRENDCT0[15:0]															
ADCRSTSTCT1	R/W	17	23	0	0	0	0	0	0	0	0	ADCRSTCT1[15:0]															
ADCRSTENDCT1	R/W	18	24	0	0	0	0	0	0	0	0	ADCRENDCT1[15:0]															
ADCRSTSTCT2	R/W	19	25	0	0	0	0	0	0	0	0	ADCRSTCT2[15:0]															
ADCRSTENDCT2	R/W	1A	26	0	0	0	0	0	0	0	0	ADCRENDCT2[15:0]															

(1) R = read only, R/W = read or write, N/A = not available, and W = write only.

Copyright © 2012–2014, Texas Instruments Incorporated

Table 6. AFE Register Map (continued)

NAME	REGISTER CONTROL[1]	ADDRESS		REGISTER DATA																							
		Hex	Dec	23	22	21	20	19	18	17	16	15	14	13	12	11	10	9	8	7	6	5	4	3	2	1	0
ADCRSTSTCT3	R/W	1B	27	0	0	0	0	0	0	0	0	ADCRSTCT3[15:0]															
ADCRSTENDCT3	R/W	1C	28	0	0	0	0	0	0	0	0	ADCRENDCT3[15:0]															
PRPCOUNT	R/W	1D	29	0	0	0	0	0	0	0	0	PRPCT[15:0]															
CONTROL1	R/W	1E	30	0	0	0	0	0	0	0	0	0	0	0	0	CLKALMPIN[2:0]			TIMEREN	0	0	0	0	0	0	1	0
SPARE1	N/A	1F	31	0	0	0	0	0	0	0	0	0	0	0	0	0	0	0	0	0	0	0	0	0	0	0	0
TIAGAIN	R/W	20	32	0	0	0	0	0	0	0	0	0	0	0	0	0	0	0	0	0	0	0	0	0	0	0	0
TIA_AMB_GAIN	R/W	21	33	0	0	0	0	AMBDAC[3:0]				0	STAGE2EN	0	0	0	STG2GAIN[2:0]			CF_LED[4:0]					RF_LED[2:0]		
LEDCNTRL	R/W	22	34	0	0	0	0	0	0	LEDCUROFF	1	LED1[7:0]								LED2[7:0]							
CONTROL2	R/W	23	35	0	0	0	0	0	0	1	0	0	0	0	0	TXBRGMOD	DIGOUT_TRISTATE	XTALDIS	1	0	0	0	0	0	PDNTX	PDNRX	PDNAFE
SPARE2	N/A	24	36	0	0	0	0	0	0	0	0	0	0	0	0	0	0	0	0	0	0	0	0	0	0	0	0
SPARE3	N/A	25	37	0	0	0	0	0	0	0	0	0	0	0	0	0	0	0	0	0	0	0	0	0	0	0	0
SPARE4	N/A	26	38	0	0	0	0	0	0	0	0	0	0	0	0	0	0	0	0	0	0	0	0	0	0	0	0
RESERVED1	N/A	27	39	0	0	0	0	0	0	0	0	0	0	0	0	0	0	0	0	0	0	0	0	0	0	0	0
RESERVED2	N/A	28	40	0	0	0	0	0	0	0	0	0	0	0	0	0	0	0	0	0	0	0	0	0	0	0	0
ALARM	R/W	29	41	0	0	0	0	0	0	0	0	0	0	0	0	0	0	0	0	ALMPINCLKEN	0	0	0	0	0	0	0
LED2VAL	R	2A	42	LED2VAL[23:0]																							
ALED2VAL	R	2B	43	ALED2VAL[23:0]																							
LED1VAL	R	2C	44	LED1VAL[23:0]																							
ALED1VAL	R	2D	45	ALED1VAL[23:0]																							
LED2-ALED2VAL	R	2E	46	LED2-ALED2VAL[23:0]																							
LED1-ALED1VAL	R	2F	47	LED1-ALED1VAL[23:0]																							

Copyright © 2012–2014, Texas Instruments Incorporated

Table 6. AFE Register Map (continued)

NAME	REGISTER CONTROL[1]	ADDRESS		REGISTER DATA																							
		Hex	Dec	23	22	21	20	19	18	17	16	15	14	13	12	11	10	9	8	7	6	5	4	3	2	1	0
DIAG	R	30	48	0	0	0	0	0	0	0	0	0	0	0	PD_ALM	LED_ALM	LED1OPEN	LED2OPEN	LEDSC	OUTPSHGND	OUTNSHGND	PDOC	PDSC	INNSCGND	INPSCGND	INNSCLED	INPSCLED

Copyright © 2012–2014, Texas Instruments Incorporated

8.6.2 AFE Register Description

Figure 59. CONTROL0: Control Register 0 (Address = 00h, Reset Value = 0000h)

23	22	21	20	19	18	17	16	15	14	13	12
0	0	0	0	0	0	0	0	0	0	0	0
11	10	9	8	7	6	5	4	3	2	1	0
0	0	0	0	0	0	0	0	SW_RST	DIAG_EN	TIM_ COUNT_ RST	SPI_ READ

This register is write-only. CONTROL0 is used for AFE software and count timer reset, diagnostics enable, and SPI read functions.

Bits 23:4 **Must be 0**

Bit 3 **SW_RST: Software reset**

0 = No action (default after reset)
1 = Software reset applied; resets all internal registers to the default values and self-clears to 0

Bit 2 **DIAG_EN: Diagnostic enable**

0 = No action (default after reset)
1 = Diagnostic mode is enabled and the diagnostics sequence starts when this bit is set. At the end of the sequence, all fault status are stored in the DIAG: Diagnostics Flag Register. Afterwards, the DIAG_EN register bit self-clears to 0.
Note that the diagnostics enable bit is automatically reset after the diagnostics completes (16 ms). During the diagnostics mode, ADC data are invalid because of the toggling diagnostics switches.

Bit 1 **TIM_CNT_RST: Timer counter reset**

0 = Disables timer counter reset, required for normal timer operation (default after reset)
1 = Timer counters are in reset state

Bit 0 **SPI READ: SPI read**

0 = SPI read is disabled (default after reset)
1 = SPI read is enabled

Figure 60. LED2STC: Sample LED2 Start Count Register (Address = 01h, Reset Value = 0000h)

23	22	21	20	19	18	17	16	15	14	13	12
0	0	0	0	0	0	0	0	LED2STC[15:0]			
11	10	9	8	7	6	5	4	3	2	1	0
LED2STC[15:0]											

This register sets the start timing value for the LED2 signal sample.

Bits 23:16 **Must be 0**

Bits 15:0 **LED2STC[15:0]: Sample LED2 start count**

The contents of this register can be used to position the start of the sample LED2 signal with respect to the pulse repetition period (PRP), as specified in the PRPCOUNT register. The count is specified as the number of
4-MHz clock cycles. Refer to the *Using the Timer Module* section for details.

Copyright © 2012–2014, Texas Instruments Incorporated

Figure 61. LED2ENDC: Sample LED2 End Count Register (Address = 02h, Reset Value = 0000h)

23	22	21	20	19	18	17	16	15	14	13	12
0	0	0	0	0	0	0	0	LED2ENDC[15:0]			
11	10	9	8	7	6	5	4	3	2	1	0
LED2ENDC[15:0]											

This register sets the end timing value for the LED2 signal sample.

Bits 23:16 **Must be 0**

Bits 15:0 **LED2ENDC[15:0]: Sample LED2 end count**

The contents of this register can be used to position the end of the sample LED2 signal with respect to the PRP, as specified in the PRPCOUNT register. The count is specified as the number of 4-MHz clock cycles. Refer to the *Using the Timer Module* section for details.

Figure 62. LED2LEDSTC: LED2 LED Start Count Register (Address = 03h, Reset Value = 0000h)

23	22	21	20	19	18	17	16	15	14	13	12
0	0	0	0	0	0	0	0	LED2LEDSTC[15:0]			
11	10	9	8	7	6	5	4	3	2	1	0
LED2LEDSTC[15:0]											

This register sets the start timing value for when the LED2 signal turns on.

Bits 23:16 **Must be 0**

Bits 15:0 **LED2LEDSTC[15:0]: LED2 start count**

The contents of this register can be used to position the start of the LED2 with respect to the PRP, as specified in the PRPCOUNT register. The count is specified as the number of 4-MHz clock cycles. Refer to the *Using the Timer Module* section for details.

Figure 63. LED2LEDENDC: LED2 LED End Count Register (Address = 04h, Reset Value = 0000h)

23	22	21	20	19	18	17	16	15	14	13	12
0	0	0	0	0	0	0	0	LED2LEDENDC[15:0]			
11	10	9	8	7	6	5	4	3	2	1	0
LED2LEDENDC[15:0]											

This register sets the end timing value for when the LED2 signal turns off.

Bits 23:16 **Must be 0**

Bits 15:0 **LED2LEDENDC[15:0]: LED2 end count**

The contents of this register can be used to position the end of the LED2 signal with respect to the PRP, as specified in the PRPCOUNT register. The count is specified as the number of 4-MHz clock cycles. Refer to the *Using the Timer Module* section for details.

Copyright © 2012–2014, Texas Instruments Incorporated

Figure 64. ALED2STC: Sample Ambient LED2 Start Count Register (Address = 05h, Reset Value = 0000h)

23	22	21	20	19	18	17	16	15	14	13	12
0	0	0	0	0	0	0	0	ALED2STC[15:0]			
11	10	9	8	7	6	5	4	3	2	1	0
ALED2STC[15:0]											

This register sets the start timing value for the ambient LED2 signal sample.

Bits 23:16 **Must be 0**

Bits 15:0 **ALED2STC[15:0]: Sample ambient LED2 start count**

The contents of this register can be used to position the start of the sample ambient LED2 signal with respect to the PRP, as specified in the PRPCOUNT register. The count is specified as the number of 4-MHz clock cycles. Refer to the *Using the Timer Module* section for details.

Figure 65. ALED2ENDC: Sample Ambient LED2 End Count Register (Address = 06h, Reset Value = 0000h)

23	22	21	20	19	18	17	16	15	14	13	12
0	0	0	0	0	0	0	0	ALED2ENDC[15:0]			
11	10	9	8	7	6	5	4	3	2	1	0
ALED2ENDC[15:0]											

This register sets the end timing value for the ambient LED2 signal sample.

Bits 23:16 **Must be 0**

Bits 15:0 **ALED2ENDC[15:0]: Sample ambient LED2 end count**

The contents of this register can be used to position the end of the sample ambient LED2 signal with respect to the PRP, as specified in the PRPCOUNT register. The count is specified as the number of 4-MHz clock cycles. Refer to the *Using the Timer Module* section for details.

Figure 66. LED1STC: Sample LED1 Start Count Register (Address = 07h, Reset Value = 0000h)

23	22	21	20	19	18	17	16	15	14	13	12
0	0	0	0	0	0	0	0	LED1STC[15:0]			
11	10	9	8	7	6	5	4	3	2	1	0
LED1STC[15:0]											

This register sets the start timing value for the LED1 signal sample.

Bits 23:17 **Must be 0**

Bits 16:0 **LED1STC[15:0]: Sample LED1 start count**

The contents of this register can be used to position the start of the sample LED1 signal with respect to the PRP, as specified in the PRPCOUNT register. The count is specified as the number of
4-MHz clock cycles. Refer to the *Using the Timer Module* section for details.

Copyright © 2012–2014, Texas Instruments Incorporated

Figure 67. LED1ENDC: Sample LED1 End Count (Address = 08h, Reset Value = 0000h)

23	22	21	20	19	18	17	16	15	14	13	12
0	0	0	0	0	0	0	0	LED1ENDC[15:0]			
11	10	9	8	7	6	5	4	3	2	1	0
LED1ENDC[15:0]											

This register sets the end timing value for the LED1 signal sample.

Bits 23:17 **Must be 0**

Bits 16:0 **LED1ENDC[15:0]: Sample LED1 end count**

The contents of this register can be used to position the end of the sample LED1 signal with respect to the PRP, as specified in the PRPCOUNT register. The count is specified as the number of
4-MHz clock cycles. Refer to the *Using the Timer Module* section for details.

Figure 68. LED1LEDSTC: LED1 LED Start Count Register (Address = 09h, Reset Value = 0000h)

23	22	21	20	19	18	17	16	15	14	13	12
0	0	0	0	0	0	0	0	LED1LEDSTC[15:0]			
11	10	9	8	7	6	5	4	3	2	1	0
LED1LEDSTC[15:0]											

This register sets the start timing value for when the LED1 signal turns on.

Bits 23:16 **Must be 0**

Bits 15:0 **LED1LEDSTC[15:0]: LED1 start count**

The contents of this register can be used to position the start of the LED1 signal with respect to the PRP, as specified in the PRPCOUNT register. The count is specified as the number of 4-MHz clock cycles. Refer to the *Using the Timer Module* section for details.

Figure 69. LED1LEDENDC: LED1 LED End Count Register (Address = 0Ah, Reset Value = 0000h)

23	22	21	20	19	18	17	16	15	14	13	12
0	0	0	0	0	0	0	0	LED1LEDENDC[15:0]			
11	10	9	8	7	6	5	4	3	2	1	0
LED1LEDENDC[15:0]											

This register sets the end timing value for when the LED1 signal turns off.

Bits 23:16 **Must be 0**

Bits 15:0 **LED1LEDENDC[15:0]: LED1 end count**

The contents of this register can be used to position the end of the LED1 signal with respect to the PRP, as specified in the PRPCOUNT register. The count is specified as the number of 4-MHz clock cycles. Refer to the *Using the Timer Module* section for details.

Copyright © 2012–2014, Texas Instruments Incorporated

Figure 70. ALED1STC: Sample Ambient LED1 Start Count Register (Address = 0Bh, Reset Value = 0000h)

23	22	21	20	19	18	17	16	15	14	13	12
0	0	0	0	0	0	0	0	ALED1STC[15:0]			
11	10	9	8	7	6	5	4	3	2	1	0
ALED1STC[15:0]											

This register sets the start timing value for the ambient LED1 signal sample.

Bits 23:16 **Must be 0**

Bits 15:0 **ALED1STC[15:0]: Sample ambient LED1 start count**

The contents of this register can be used to position the start of the sample ambient LED1 signal with respect to the PRP, as specified in the PRPCOUNT register. The count is specified as the number of 4-MHz clock cycles. Refer to the *Using the Timer Module* section for details.

Figure 71. ALED1ENDC: Sample Ambient LED1 End Count Register (Address = 0Ch, Reset Value = 0000h)

23	22	21	20	19	18	17	16	15	14	13	12
0	0	0	0	0	0	0	0	ALED1ENDC[15:0]			
11	10	9	8	7	6	5	4	3	2	1	0
ALED1ENDC[15:0]											

This register sets the end timing value for the ambient LED1 signal sample.

Bits 23:16 **Must be 0**

Bits 15:0 **ALED1ENDC[15:0]: Sample ambient LED1 end count**

The contents of this register can be used to position the end of the sample ambient LED1 signal with respect to the PRP, as specified in the PRPCOUNT register. The count is specified as the number of 4-MHz clock cycles. Refer to the *Using the Timer Module* section for details.

Figure 72. LED2CONVST: LED2 Convert Start Count Register (Address = 0Dh, Reset Value = 0000h)

23	22	21	20	19	18	17	16	15	14	13	12
0	0	0	0	0	0	0	0	LED2CONVST[15:0]			
11	10	9	8	7	6	5	4	3	2	1	0
LED2CONVST[15:0]											

This register sets the start timing value for the LED2 conversion.

Bits 23:16 **Must be 0**

Bits 15:0 **LED2CONVST[15:0]: LED2 convert start count**

The contents of this register can be used to position the start of the LED2 conversion signal with respect to the PRP, as specified in the PRPCOUNT register. The count is specified as the number of 4-MHz clock cycles. Refer to the *Using the Timer Module* section for details.

Copyright © 2012–2014, Texas Instruments Incorporated

Figure 73. LED2CONVEND: LED2 Convert End Count Register (Address = 0Eh, Reset Value = 0000h)

23	22	21	20	19	18	17	16	15	14	13	12
0	0	0	0	0	0	0	0	LED2CONVEND[15:0]			
11	10	9	8	7	6	5	4	3	2	1	0
LED2CONVEND[15:0]											

This register sets the end timing value for the LED2 conversion.

Bits 23:16 **Must be 0**

Bits 15:0 **LED2CONVEND[15:0]: LED2 convert end count**

The contents of this register can be used to position the end of the LED2 conversion signal with respect to the PRP, as specified in the PRPCOUNT register. The count is specified as the number of 4-MHz clock cycles. Refer to the *Using the Timer Module* section for details.

Figure 74. ALED2CONVST: LED2 Ambient Convert Start Count Register (Address = 0Fh, Reset Value = 0000h)

23	22	21	20	19	18	17	16	15	14	13	12
0	0	0	0	0	0	0	0	ALED2CONVST[15:0]			
11	10	9	8	7	6	5	4	3	2	1	0
ALED2CONVST[15:0]											

This register sets the start timing value for the ambient LED2 conversion.

Bits 23:16 **Must be 0**

Bits 15:0 **ALED2CONVST[15:0]: LED2 ambient convert start count**

The contents of this register can be used to position the start of the LED2 ambient conversion signal with respect to the PRP, as specified in the PRPCOUNT register. The count is specified as the number of 4-MHz clock cycles. Refer to the *Using the Timer Module* section for details.

Figure 75. ALED2CONVEND: LED2 Ambient Convert End Count Register (Address = 10h, Reset Value = 0000h)

23	22	21	20	19	18	17	16	15	14	13	12
0	0	0	0	0	0	0	0	ALED2CONVEND[15:0]			
11	10	9	8	7	6	5	4	3	2	1	0
ALED2CONVEND[15:0]											

This register sets the end timing value for the ambient LED2 conversion.

Bits 23:16 **Must be 0**

Bits 15:0 **ALED2CONVEND[15:0]: LED2 ambient convert end count**

The contents of this register can be used to position the end of the LED2 ambient conversion signal with respect to the PRP. The count is specified as the number of 4-MHz clock cycles. Refer to the *Using the Timer Module* section for details.

Copyright © 2012–2014, Texas Instruments Incorporated

Figure 76. LED1CONVST: LED1 Convert Start Count Register (Address = 11h, Reset Value = 0000h)

23	22	21	20	19	18	17	16	15	14	13	12
0	0	0	0	0	0	0	0	LED1CONVST[15:0]			
11	10	9	8	7	6	5	4	3	2	1	0
LED1CONVST[15:0]											

This register sets the start timing value for the LED1 conversion.

Bits 23:16 **Must be 0**

Bits 15:0 **LED1CONVST[15:0]: LED1 convert start count**

The contents of this register can be used to position the start of the LED1 conversion signal with respect to the PRP, as specified in the PRPCOUNT register. The count is specified as the number of 4-MHz clock cycles. Refer to the *Using the Timer Module* section for details.

Figure 77. LED1CONVEND: LED1 Convert End Count Register (Address = 12h, Reset Value = 0000h)

23	22	21	20	19	18	17	16	15	14	13	12
0	0	0	0	0	0	0	0	LED1CONVEND[15:0]			
11	10	9	8	7	6	5	4	3	2	1	0
LED1CONVEND[15:0]											

This register sets the end timing value for the LED1 conversion.

Bits 23:16 **Must be 0**

Bits 15:0 **LED1CONVEND[15:0]: LED1 convert end count**

The contents of this register can be used to position the end of the LED1 conversion signal with respect to the PRP. The count is specified as the number of 4-MHz clock cycles. Refer to the *Using the Timer Module* section for details.

Figure 78. ALED1CONVST: LED1 Ambient Convert Start Count Register (Address = 13h, Reset Value = 0000h)

23	22	21	20	19	18	17	16	15	14	13	12
0	0	0	0	0	0	0	0	ALED1CONVST[15:0]			
11	10	9	8	7	6	5	4	3	2	1	0
ALED1CONVST[15:0]											

This register sets the start timing value for the ambient LED1 conversion.

Bits 23:16 **Must be 0**

Bits 15:0 **ALED1CONVST[15:0]: LED1 ambient convert start count**

The contents of this register can be used to position the start of the LED1 ambient conversion signal with respect to the PRP, as specified in the PRPCOUNT register. The count is specified as the number of 4-MHz clock cycles. Refer to the *Using the Timer Module* section for details.

Copyright © 2012–2014, Texas Instruments Incorporated

Figure 79. ALED1CONVEND: LED1 Ambient Convert End Count Register (Address = 14h, Reset Value = 0000h)

23	22	21	20	19	18	17	16	15	14	13	12
0	0	0	0	0	0	0	0	ALED1CONVEND[15:0]			
11	10	9	8	7	6	5	4	3	2	1	0
ALED1CONVEND[15:0]											

This register sets the end timing value for the ambient LED1 conversion.

Bits 23:16 **Must be 0**

Bits 15:0 **ALED1CONVEND[15:0]: LED1 ambient convert end count**

The contents of this register can be used to position the end of the LED1 ambient conversion signal with respect to the PRP. The count is specified as the number of 4-MHz clock cycles. Refer to the *Using the Timer Module* section for details.

Figure 80. ADCRSTSTCT0: ADC Reset 0 Start Count Register (Address = 15h, Reset Value = 0000h)

23	22	21	20	19	18	17	16	15	14	13	12
0	0	0	0	0	0	0	0	ADCRSTSTCT0[15:0]			
11	10	9	8	7	6	5	4	3	2	1	0
ADCRSTSTCT0[15:0]											

This register sets the start position of the ADC0 reset conversion signal.

Bits 23:16 **Must be 0**

Bits 15:0 **ADCRSTSTCT0[15:0]: ADC RESET 0 start count**

The contents of this register can be used to position the start of the ADC reset conversion signal (default value after reset is 0000h). Refer to the *Using the Timer Module* section for details.

Figure 81. ADCRSTENDCT0: ADC Reset 0 End Count Register (Address = 16h, Reset Value = 0000h)

23	22	21	20	19	18	17	16	15	14	13	12
0	0	0	0	0	0	0	0	ADCRSTENDCT0[15:0]			
11	10	9	8	7	6	5	4	3	2	1	0
ADCRSTENDCT0[15:0]											

This register sets the end position of the ADC0 reset conversion signal.

Bits 23:16 **Must be 0**

Bits 15:0 **ADCRSTENDCT0[15:0]: ADC RESET 0 end count**

The contents of this register can be used to position the end of the ADC reset conversion signal (default value after reset is 0000h). Refer to the *Using the Timer Module* section for details.

Copyright © 2012–2014, Texas Instruments Incorporated

Figure 82. ADCRSTSTCT1: ADC Reset 1 Start Count Register (Address = 17h, Reset Value = 0000h)

23	22	21	20	19	18	17	16	15	14	13	12
0	0	0	0	0	0	0	0	ADCRSTSTCT1[15:0]			
11	10	9	8	7	6	5	4	3	2	1	0
ADCRSTSTCT1[15:0]											

This register sets the start position of the ADC1 reset conversion signal.

Bits 23:16 **Must be 0**

Bits 15:0 **ADCRSTSTCT1[15:0]: ADC RESET 1 start count**

The contents of this register can be used to position the start of the ADC reset conversion. Refer to the *Using the Timer Module* section for details.

Figure 83. ADCRSTENDCT1: ADC Reset 1 End Count Register (Address = 18h, Reset Value = 0000h)

23	22	21	20	19	18	17	16	15	14	13	12
0	0	0	0	0	0	0	0	ADCRSTENDCT1[15:0]			
11	10	9	8	7	6	5	4	3	2	1	0
ADCRSTENDCT1[15:0]											

This register sets the end position of the ADC1 reset conversion signal.

Bits 23:16 **Must be 0**

Bits 15:0 **ADCRSTENDCT1[15:0]: ADC RESET 1 end count**

The contents of this register can be used to position the end of the ADC reset conversion. Refer to the *Using the Timer Module* section for details.

Figure 84. ADCRSTSTCT2: ADC Reset 2 Start Count Register (Address = 19h, Reset Value = 0000h)

23	22	21	20	19	18	17	16	15	14	13	12
0	0	0	0	0	0	0	0	ADCRSTSTCT2[15:0]			
11	10	9	8	7	6	5	4	3	2	1	0
ADCRSTSTCT2[15:0]											

This register sets the start position of the ADC2 reset conversion signal.

Bits 23:16 **Must be 0**

Bits 15:0 **ADCRSTSTCT2[15:0]: ADC RESET 2 start count**

The contents of this register can be used to position the start of the ADC reset conversion. Refer to the *Using the Timer Module* section for details.

Copyright © 2012–2014, Texas Instruments Incorporated

Figure 85. ADCRSTENDCT2: ADC Reset 2 End Count Register (Address = 1Ah, Reset Value = 0000h)

23	22	21	20	19	18	17	16	15	14	13	12
0	0	0	0	0	0	0	0	ADCRSTENDCT2[15:0]			
11	10	9	8	7	6	5	4	3	2	1	0
ADCRSTENDCT2[15:0]											

This register sets the end position of the ADC2 reset conversion signal.

Bits 23:16 **Must be 0**

Bits 15:0 **ADCRSTENDCT2[15:0]: ADC RESET 2 end count**

The contents of this register can be used to position the end of the ADC reset conversion. Refer to the *Using the Timer Module* section for details.

Figure 86. ADCRSTSTCT3: ADC Reset 3 Start Count Register (Address = 1Bh, Reset Value = 0000h)

23	22	21	20	19	18	17	16	15	14	13	12
0	0	0	0	0	0	0	0	ADCRSTSTCT3[15:0]			
11	10	9	8	7	6	5	4	3	2	1	0
ADCRSTSTCT3[15:0]											

This register sets the start position of the ADC3 reset conversion signal.

Bits 23:16 **Must be 0**

Bits 15:0 **ADCRSTSTCT3[15:0]: ADC RESET 3 start count**

The contents of this register can be used to position the start of the ADC reset conversion. Refer to the *Using the Timer Module* section for details.

Figure 87. ADCRSTENDCT3: ADC Reset 3 End Count Register (Address = 1Ch, Reset Value = 0000h)

23	22	21	20	19	18	17	16	15	14	13	12
0	0	0	0	0	0	0	0	ADCRSTENDCT3[15:0]			
11	10	9	8	7	6	5	4	3	2	1	0
ADCRSTENDCT3[15:0]											

This register sets the end position of the ADC3 reset conversion signal.

Bits 23:16 **Must be 0**

Bits 15:0 **ADCRSTENDCT3[15:0]: ADC RESET 3 end count**

The contents of this register can be used to position the end of the ADC reset conversion signal (default value after reset is 0000h). Refer to the *Using the Timer Module* section for details.

Copyright © 2012–2014, Texas Instruments Incorporated

Figure 88. PRPCOUNT: Pulse Repetition Period Count Register (Address = 1Dh, Reset Value = 0000h)

23	22	21	20	19	18	17	16	15	14	13	12
0	0	0	0	0	0	0	0	PRPCOUNT[15:0]			
11	10	9	8	7	6	5	4	3	2	1	0
PRPCOUNT[15:0]											

This register sets the device pulse repetition period count.

Bits 23:16 **Must be 0**

Bits 15:0 **PRPCOUNT[15:0]: Pulse repetition period count**

The contents of this register can be used to set the pulse repetition period (in number of clock cycles of the 4-MHz clock). The PRPCOUNT value must be set in the range of 800 to 64000. Values below 800 do not allow sufficient sample time for the four samples; see the *Electrical Characteristics* table.

Figure 89. CONTROL1: Control Register 1 (Address = 1Eh, Reset Value = 0000h)

23	22	21	20	19	18	17	16	15	14	13	12
0	0	0	0	0	0	0	0	0	0	0	0
11	10	9	8	7	6	5	4	3	2	1	0
CLKALMPIN[2:0]			TIMEREN	0	0	0	0	0	0	1	0

This register configures the clock alarm pin and timer.

Bits 23:12 **Must be 0**

Bits 11:9 **CLKALMPIN[2:0]: Clocks on ALM pins**

Internal clocks can be brought to the PD_ALM and LED_ALM pins for monitoring. Note that the ALMPINCLKEN register bit must be set before using this register bit. Table 7 defines the settings for the two alarm pins.

Bit 8 **TIMEREN: Timer enable**

0 = Timer module is disabled and all internal clocks are off (default after reset)
1 = Timer module is enabled

Bits 7:2 **Must be 0**

Bit 1 **Must be 1**

Bit 0 **Must be 0**

Table 7. PD_ALM and LED_ALM Pin Settings

CLKALMPIN[2:0]	PD_ALM PIN SIGNAL	LED_ALM PIN SIGNAL
000	Sample LED2 pulse	Sample LED1 pulse
001	LED2 LED pulse	LED1 LED pulse
010	Sample LED2 ambient pulse	Sample LED1 ambient pulse
011	LED2 convert	LED1 convert
100	LED2 ambient convert	LED1 ambient convert
101	No output	No output
110	No output	No output
111	No output	No output

Copyright © 2012–2014, Texas Instruments Incorporated

Figure 90. SPARE1: SPARE1 Register For Future Use (Address = 1Fh, Reset Value = 0000h)

23	22	21	20	19	18	17	16	15	14	13	12
0	0	0	0	0	0	0	0	0	0	0	0
11	10	9	8	7	6	5	4	3	2	1	0
0	0	0	0	0	0	0	0	0	0	0	0

This register is a spare register and is reserved for future use.

Bits 23:0 Must be 0

Figure 91. TIAGAIN: Transimpedance Amplifier Gain Setting Register (Address = 20h, Reset Value = 0000h)

23	22	21	20	19	18	17	16	15	14	13	12
0	0	0	0	0	0	0	0	0	0	0	0
11	10	9	8	7	6	5	4	3	2	1	0
0	0	0	0	0	0	0	0	0	0	0	0

This register is reserved for factory use.

Bits 23:0 Must be 0

Copyright © 2012–2014, Texas Instruments Incorporated

Figure 92. TIA_AMB_GAIN: Transimpedance Amplifier and Ambient Cancellation Stage Gain Register (Address = 21h, Reset Value = 0000h)

23	22	21	20	19	18	17	16	15	14	13	12
0	0	0	0	AMBDAC[3:0]				0	STAGE2EN	0	0
11	10	9	8	7	6	5	4	3	2	1	0
0	STG2GAIN[2:0]			CF_LED2[4:0]					RF_LED2[2:0]		

This register configures the ambient light cancellation amplifier gain, cancellation current, and filter corner frequency.

Bits 23:20 **Must be 0**

Bits 19:16 **AMBDAC[3:0]: Ambient DAC value**

These bits set the value of the cancellation current.

0000 = 0 µA (default after reset)
0001 = 1 µA
0010 = 2 µA
0011 = 3 µA
0100 = 4 µA
0101 = 5 µA
0110 = 6 µA
0111 = 7 µA
1000 = 8 µA
1001 = 9 µA
1010 = 10 µA
1011 = Do not use
1100 = Do not use
1101 = Do not use
1110 = Do not use
1111 = Do not use

Bit 15 **Must be 0**

Bit 14 **STAGE2EN: Stage 2 enable for LED 2**

0 = Stage 2 is bypassed (default after reset)
1 = Stage 2 is enabled with the gain value specified by the STG2GAIN[2:0] bits

Bits 13:11 **Must be 0**

Bits 10:8 **STG2GAIN[2:0]: Stage 2 gain setting**

000 = 0 dB, or linear gain of 1 (default after reset)
001 = 3.5 dB, or linear gain of 1.5
010 = 6 dB, or linear gain of 2
011 = 9.5 dB, or linear gain of 3
100 = 12 dB, or linear gain of 4
101 = Do not use
110 = Do not use
111 = Do not use

Bits 7:3 **CF_LED[4:0]: Program C_F for LEDs**

00000 = 5 pF (default after reset)
00001 = 5 pF + 5 pF
00010 = 15 pF + 5 pF
00100 = 25 pF + 5 pF
01000 = 50 pF + 5 pF
10000 = 150 pF + 5 pF

Note that any combination of these C_F settings is also supported by setting multiple bits to 1. For example, to obtain C_F = 100 pF, set D[7:3] = 01111.

Bits 2:0 **RF_LED[2:0]: Program R_F for LEDs**

000 = 500 kΩ
001 = 250 kΩ
010 = 100 kΩ
011 = 50 kΩ
100 = 25 kΩ
101 = 10 kΩ
110 = 1 MΩ
111 = None

Copyright © 2012–2014, Texas Instruments Incorporated

Figure 93. LEDCNTRL: LED Control Register (Address = 22h, Reset Value = 0000h)

23	22	21	20	19	18	17	16	15	14	13	12
0	0	0	0	0	0	LEDCUR OFF	1	LED1[7:0]			
11	10	9	8	7	6	5	4	3	2	1	0
LED1[7:0]				LED2[7:0]							

This register sets the LED current range and the LED1 and LED2 drive current.

Bits 23:18 **Must be 0**

Bit 17 **LEDCUROFF: Turns the LED current source on or off**

0 = On (50 mA)
1 = Off

Bit 16 **Must be 1**

Bits 15:8 **LED1[7:0]: Program LED current for LED1 signal**

Use these register bits to specify the LED current setting for LED1 (default after reset is 00h).
The nominal value of the LED current is given by Equation 3, where the full-scale LED current is 50 mA.

Bits 7:0 **LED2[7:0]: Program LED current for LED2 signal**

Use these register bits to specify the LED current setting for LED2 (default after reset is 00h).
The nominal value of LED current is given by Equation 4, where the full-scale LED current is 50 mA.

$$\frac{\text{LED1[7:0]}}{256} \times \text{Full-Scale Current} \quad (3)$$

$$\frac{\text{LED2[7:0]}}{256} \times \text{Full-Scale Current} \quad (4)$$

Copyright © 2012–2014, Texas Instruments Incorporated

Figure 94. CONTROL2: Control Register 2 (Address = 23h, Reset Value = 0000h)

23	22	21	20	19	18	17	16	15	14	13	12
0	0	0	0	0	0	1	0	0	0	0	0
11	10	9	8	7	6	5	4	3	2	1	0
TXBRG MOD	DIGOUT_ TRI STATE	XTAL DIS	1	0	0	0	0	0	PDNTX	PDNRX	PDNAFE

This register controls the LED transmitter, crystal, and the AFE, transmitter, and receiver power modes.

Bits 23:18 **Must be 0**

Bit 17 **Must be 1**

Bits 16:12 **Must be 0**

Bit 11 **TXBRGMOD: Tx bridge mode**

0 = LED driver is configured as an H-bridge (default after reset)
1 = LED driver is configured as a push-pull

Bit 10 **DIGOUT_TRISTATE: Digital output 3-state mode**

This bit determines the state of the device digital output pins, including the clock output pin and SPI output pins. In order to avoid loading the SPI bus when multiple devices are connected, this bit must be set to 1 (3-state mode) whenever the device SPI is inactive.

0 = Normal operation (default)
1 = 3-state mode

Bit 9 **XTALDIS: Crystal disable mode**

0 = The crystal module is enabled; the 8-MHz crystal must be connected to the XIN and XOUT pins
1 = The crystal module is disabled; an external 8-MHz clock must be applied to the XIN pin

Bit 8 **Must be 1**

Bits 7:3 **Must be 0**

Bit 2 **PDN_TX: Tx power-down**

0 = The Tx is powered up (default after reset)
1 = Only the Tx module is powered down

Bit 1 **PDN_RX: Rx power-down**

0 = The Rx is powered up (default after reset)
1 = Only the Rx module is powered down

Bit 0 **PDN_AFE: AFE power-down**

0 = The AFE is powered up (default after reset)
1 = The entire AFE is powered down (including the Tx, Rx, and diagnostics blocks)

Figure 95. SPARE2: SPARE2 Register For Future Use (Address = 24h, Reset Value = 0000h)

23	22	21	20	19	18	17	16	15	14	13	12
0	0	0	0	0	0	0	0	0	0	0	0
11	10	9	8	7	6	5	4	3	2	1	0
0	0	0	0	0	0	0	0	0	0	0	0

This register is a spare register and is reserved for future use.

Bits 23:0 **Must be 0**

Copyright © 2012–2014, Texas Instruments Incorporated

Figure 96. SPARE3: SPARE3 Register For Future Use (Address = 25h, Reset Value = 0000h)

23	22	21	20	19	18	17	16	15	14	13	12
0	0	0	0	0	0	0	0	0	0	0	0
11	10	9	8	7	6	5	4	3	2	1	0
0	0	0	0	0	0	0	0	0	0	0	0

This register is a spare register and is reserved for future use.

Bits 23:0 Must be 0

Figure 97. SPARE4: SPARE4 Register For Future Use (Address = 26h, Reset Value = 0000h)

23	22	21	20	19	18	17	16	15	14	13	12
0	0	0	0	0	0	0	0	0	0	0	0
11	10	9	8	7	6	5	4	3	2	1	0
0	0	0	0	0	0	0	0	0	0	0	0

This register is a spare register and is reserved for future use.

Bits 23:0 Must be 0

Figure 98. RESERVED1: RESERVED1 Register For Factory Use Only (Address = 27h, Reset Value = XXXXh)

23	22	21	20	19	18	17	16	15	14	13	12
X(1)	X	X	X	X	X	X	X	X	X	X	X
11	10	9	8	7	6	5	4	3	2	1	0
X	X	X	X	X	X	X	X	X	X	X	X

(1) X = don't care.

This register is reserved for factory use. Readback values vary between devices.

Figure 99. RESERVED2: RESERVED2 Register For Factory Use Only (Address = 28h, Reset Value = XXXXh)

23	22	21	20	19	18	17	16	15	14	13	12
X(1)	X	X	X	X	X	X	X	X	X	X	X
11	10	9	8	7	6	5	4	3	2	1	0
X	X	X	X	X	X	X	X	X	X	X	X

(1) X = don't care.

This register is reserved for factory use. Readback values vary between devices.

Copyright © 2012–2014, Texas Instruments Incorporated

Figure 100. ALARM: Alarm Register (Address = 29h, Reset Value = 0000h)

23	22	21	20	19	18	17	16	15	14	13	12
0	0	0	0	0	0	0	0	0	0	0	0
11	10	9	8	7	6	5	4	3	2	1	0
0	0	0	0	ALMPIN CLKEN	0	0	0	0	0	0	0

This register controls the alarm pin functionality.

Bits 23:8 **Must be 0**

Bit 7 **ALMPINCLKEN: Alarm pin clock enable**

0 = Disables the monitoring of internal clocks; the PD_ALM and LED_ALM pins function as diagnostic fault alarm output pins (default after reset)
1 = Enables the monitoring of internal clocks; these clocks can be brought out on PD_ALM and LED_ALM selectively (depending on the value of the CLKALMPIN[2:0] register bits).

Bits 6:0 **Must be 0**

Figure 101. LED2VAL: LED2 Digital Sample Value Register (Address = 2Ah, Reset Value = 0000h)

23	22	21	20	19	18	17	16	15	14	13	12
LED2VAL[23:0]											
11	10	9	8	7	6	5	4	3	2	1	0
LED2VAL[23:0]											

Bits 23:0 **LED2VAL[23:0]: LED2 digital value**

This register contains the digital value of the latest LED2 sample converted by the ADC. The ADC_RDY signal goes high each time that the contents of this register are updated. The host processor must readout this register before the next sample is converted by the AFE.

Figure 102. ALED2VAL: Ambient LED2 Digital Sample Value Register (Address = 2Bh, Reset Value = 0000h)

23	22	21	20	19	18	17	16	15	14	13	12
ALED2VAL[23:0]											
11	10	9	8	7	6	5	4	3	2	1	0
ALED2VAL[23:0]											

Bits 23:0 **ALED2VAL[23:0]: LED2 ambient digital value**

This register contains the digital value of the latest LED2 ambient sample converted by the ADC. The ADC_RDY signal goes high each time that the contents of this register are updated. The host processor must readout this register before the next sample is converted by the AFE.

Copyright © 2012–2014, Texas Instruments Incorporated

Figure 103. LED1VAL: LED1 Digital Sample Value Register (Address = 2Ch, Reset Value = 0000h)

23	22	21	20	19	18	17	16	15	14	13	12
LED1VAL[23:0]											
11	10	9	8	7	6	5	4	3	2	1	0
LED1VAL[23:0]											

Bits 23:0 **LED1VAL[23:0]: LED1 digital value**

This register contains the digital value of the latest LED1 sample converted by the ADC. The ADC_RDY signal goes high each time that the contents of this register are updated. The host processor must readout this register before the next sample is converted by the AFE.

Figure 104. ALED1VAL: Ambient LED1 Digital Sample Value Register (Address = 2Dh, Reset Value = 0000h)

23	22	21	20	19	18	17	16	15	14	13	12
ALED1VAL[23:0]											
11	10	9	8	7	6	5	4	3	2	1	0
ALED1VAL[23:0]											

Bits 23:0 **ALED1VAL[23:0]: LED1 ambient digital value**

This register contains the digital value of the latest LED1 ambient sample converted by the ADC. The ADC_RDY signal goes high each time that the contents of this register are updated. The host processor must readout this register before the next sample is converted by the AFE.

Figure 105. LED2-ALED2VAL: LED2-Ambient LED2 Digital Sample Value Register (Address = 2Eh, Reset Value = 0000h)

23	22	21	20	19	18	17	16	15	14	13	12
LED2-ALED2VAL[23:0]											
11	10	9	8	7	6	5	4	3	2	1	0
LED2-ALED2VAL[23:0]											

Bits 23:0 **LED2-ALED2VAL[23:0]: (LED2 – LED2 ambient) digital value**

This register contains the digital value of the LED2 sample after the LED2 ambient is subtracted. The host processor must readout this register before the next sample is converted by the AFE.
Note that this value is inverted when compared to waveforms shown in many publications.

Figure 106. LED1-ALED1VAL: LED1-Ambient LED1 Digital Sample Value Register (Address = 2Fh, Reset Value = 0000h)

23	22	21	20	19	18	17	16	15	14	13	12
LED1-ALED1VAL[23:0]											
11	10	9	8	7	6	5	4	3	2	1	0
LED1-ALED1VAL[23:0]											

Bits 23:0 **LED1-ALED1VAL[23:0]: (LED1 – LED1 ambient) digital value**

This register contains the digital value of the LED1 sample after the LED1 ambient is subtracted from it. The host processor must readout this register before the next sample is converted by the AFE.
Note that this value is inverted when compared to waveforms shown in many publications.

Copyright © 2012–2014, Texas Instruments Incorporated

Figure 107. DIAG: Diagnostics Flag Register (Address = 30h, Reset Value = 0000h)

23	22	21	20	19	18	17	16	15	14	13	12
0	0	0	0	0	0	0	0	0	0	0	PD_ALM
11	10	9	8	7	6	5	4	3	2	1	0
LED_ ALM	LED1 OPEN	LED2 OPEN	LEDSC	OUTPSH GND	OUTNSH GND	PDOC	PDSC	INNSC GND	INPSC GND	INNSC LED	INPSC LED

This register is read only. This register contains the status of all diagnostic flags at the end of the diagnostics sequence. The end of the diagnostics sequence is indicated by the signal going high on DIAG_END pin.

Bits 23:13 **Read only**

Bit 12 **PD_ALM: Power-down alarm status diagnostic flag**

This bit indicates the status of PD_ALM (and the PD_ALM pin).
0 = No fault (default after reset)
1 = Fault present

Bit 11 **LED_ALM: LED alarm status diagnostic flag**

This bit indicates the status of LED_ALM (and the LED_ALM pin).
0 = No fault (default after reset)
1 = Fault present

Bit 10 **LED1OPEN: LED1 open diagnostic flag**

This bit indicates that LED1 is open.
0 = No fault (default after reset)
1 = Fault present

Bit 9 **LED2OPEN: LED2 open diagnostic flag**

This bit indicates that LED2 is open.
0 = No fault (default after reset)
1 = Fault present

This bit indicates that LED2 is open.
0 = No fault (default after reset)
1 = Fault present

Bit 8 **LEDSC: LED short diagnostic flag**

This bit indicates an LED short.
0 = No fault (default after reset)
1 = Fault present

Bit 7 **OUTPSHGND: OUTP to GND diagnostic flag**

This bit indicates that OUTP is shorted to the GND cable.
0 = No fault (default after reset)
1 = Fault present

Bit 6 **OUTNSHGND: OUTN to GND diagnostic flag**

This bit indicates that OUTN is shorted to the GND cable.
0 = No fault (default after reset)
1 = Fault present

Bit 5 **PDOC: PD open diagnostic flag**

This bit indicates that PD is open.
0 = No fault (default after reset)
1 = Fault present

Copyright © 2012–2014, Texas Instruments Incorporated

Bit 4 **PDSC: PD short diagnostic flag**

This bit indicates a PD short.
0 = No fault (default after reset)
1 = Fault present

Bit 3 **INNSCGND: INN to GND diagnostic flag**

This bit indicates a short from the INN pin to the GND cable.
0 = No fault (default after reset)
1 = Fault present

Bit 2 **INPSCGND: INP to GND diagnostic flag**

This bit indicates a short from the INP pin to the GND cable.
0 = No fault (default after reset)
1 = Fault present

Bit 1 **INNSCLED: INN to LED diagnostic flag**

This bit indicates a short from the INN pin to the LED cable.
0 = No fault (default after reset)
1 = Fault present

Bit 0 **INPSCLED: INP to LED diagnostic flag**

This bit indicates a short from the INP pin to the LED cable.
0 = No fault (default after reset)
1 = Fault present

Copyright © 2012–2014, Texas Instruments Incorporated

9 Applications and Implementation

9.1 Application Information

The AFE4400 can be used for measuring SPO2 and for monitoring heart rate. The high dynamic range of the device enables measuring SPO2 with a high degree of accuracy even under low-perfusion (ac-to-dc ratio) conditions. An SPO2 measurement system involves two different wavelength LEDs—usually Red and IR. By computing the ratio of the ac to dc at the two different wavelengths, the SPO2 can be calculated. Heart rate monitoring systems can also benefit from the high dynamic range of the device, which enables capturing a high-fidelity pulsating signal even in cases where the signal strength is low.

For more information on application guidelines, refer to the *AFE44x0SPO2EVM User's Guide* (SLAU480).

9.2 Typical Application

Device connections in a typical application are shown in Figure 108. Refer to the *AFE44x0SPO2EVM User's Guide* (SLAU480) for more details. The schematic in Figure 108 is a part of the AFE44x0SPO2EVM and shows a cabled application in which the LEDs and photodiode are connected to the AFE4400 through a cable. However, in an application without cables, the LEDs and photodiode can be directly connected to the TXP, TXN and INP, INN pins directly, as shown in the *Design Requirements* section.

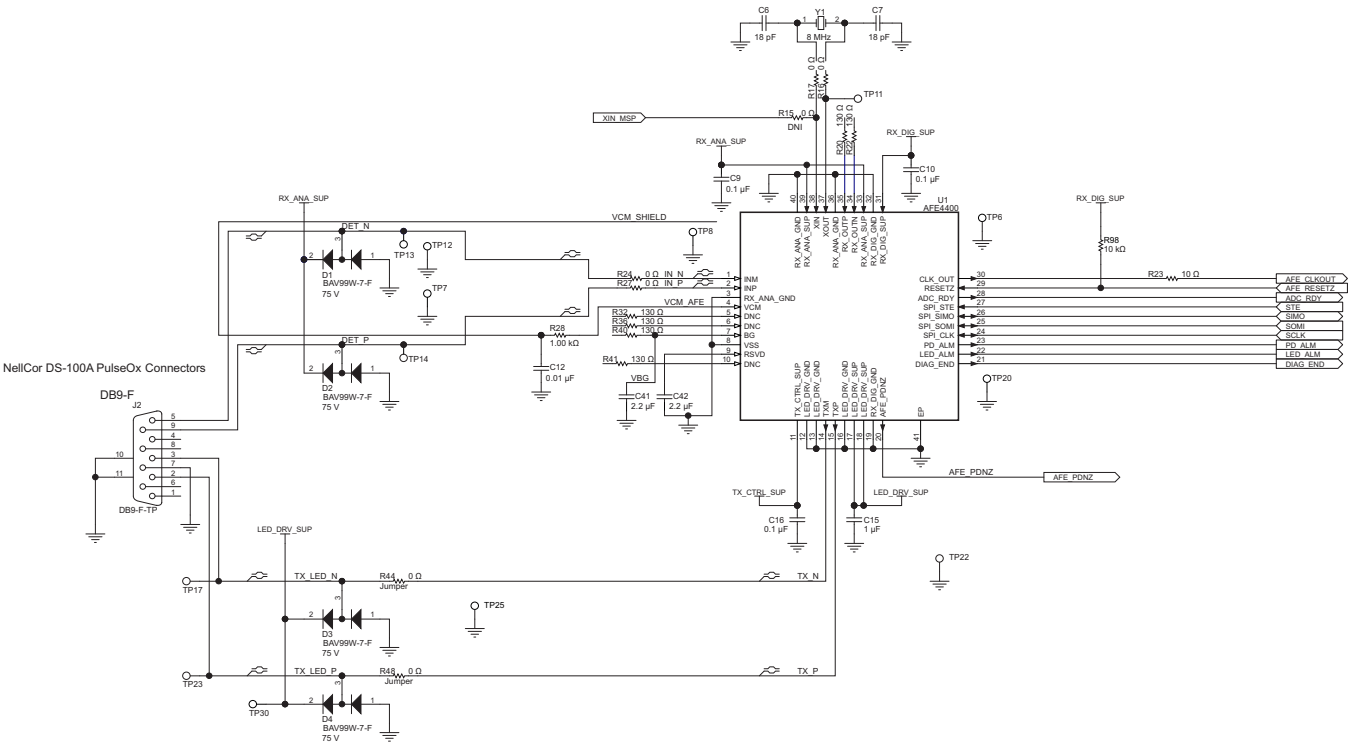

NOTE: The following signals must be considered as two sets of differential pains and routed as adjacent signals within each pair:
TXM, TXP and INM, INP.
INM and INP must be guarded with VCM_SHIELD the signal. Run the VCM_SHIELD signal to the DB9 connector and back to the device.

Figure 108. AFE44x0SPO2EVM: Connections to the AFE4490

Copyright © 2012–2014, Texas Instruments Incorporated

Typical Application (continued)

9.2.1 Design Requirements

An SPO2 application usually involves a Red LED and an IR LED. These LEDs can be connected either in the common anode configuration or H-bridge configuration to the TXP, TXN pins. Figure 109 shows common anode configuration and Figure 110 shows H-bridge configuration.

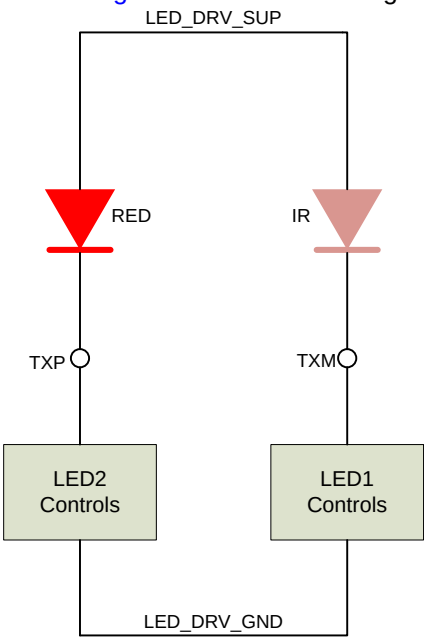

Figure 109. LEDs in Common Anode Configuration

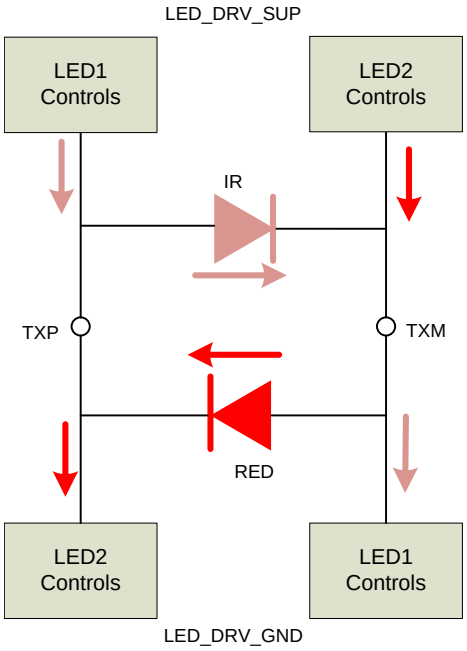

Figure 110. LEDs in H-Bridge Configuration

9.2.2 Detailed Design Procedure

The photodiode receives the light from both the Red and IR phases and usually has good sensitivities at both these wavelengths.

The photodiode connected in this manner operates in zero bias because of the negative feedback from the transimpedance amplifier. The connections of the photodiode to the AFE inputs are shown in Figure 111.

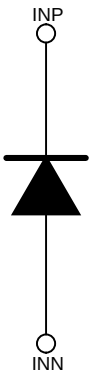

Figure 111. Photodiode Connection

Copyright © 2012–2014, Texas Instruments Incorporated

Typical Application (continued)

The signal current generated by the photodiode is converted into a voltage by the transimpedance amplifier, which has a programmable transimpedance gain. The rest of the signal chain then presents a voltage to the ADC. The full-scale output of the transimpedance amplifier is ±1 V and the full-scale input to the ADC is ±1.2 V. An automatic gain control loop can be used to set the target dc voltage at the ADC input to approximately 50% of full scale. This type of AGC loop can control a combination of LED current and TIA gain to achieve this target value; see Figure 112.

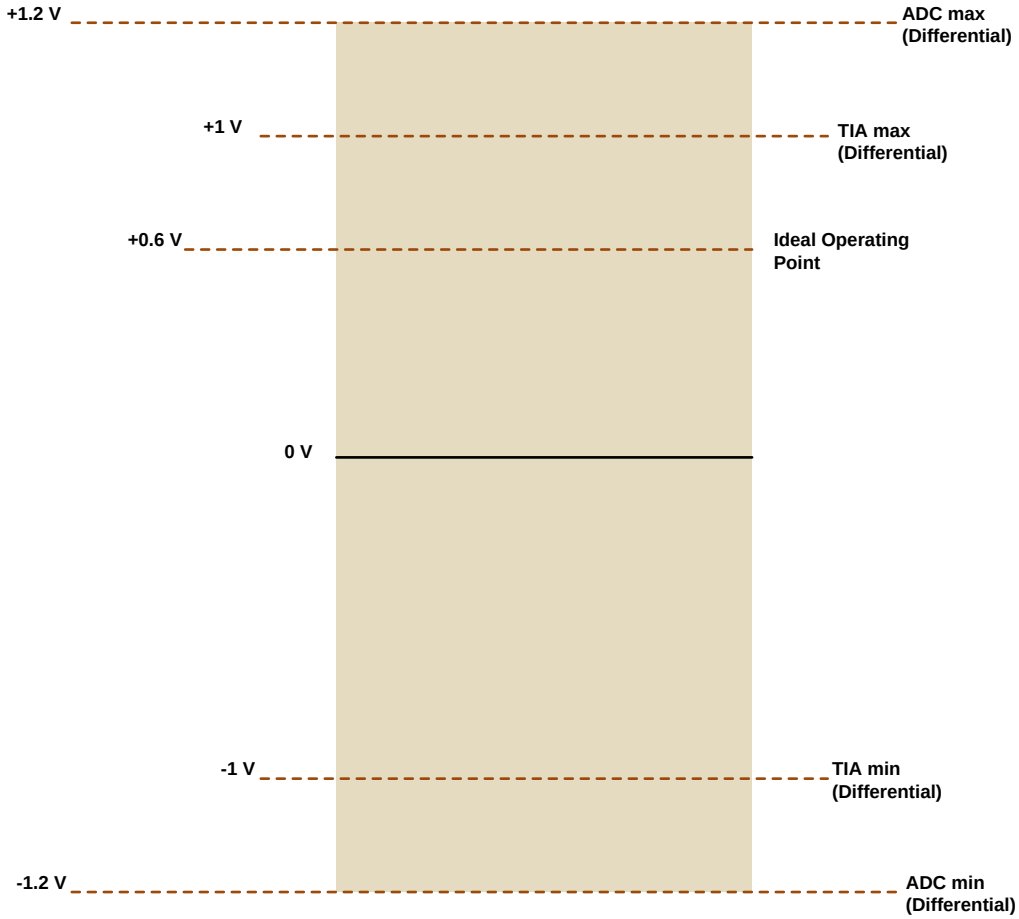

Figure 112. AGC Loop

The ADC output is a 22-bit code that is obtained by discarding the two MSBs of the 24-bit registers. The data format is binary twos complement format, MSB first. TI recommends that the input to the ADC does not exceed ±1 V (which is approximately 80% full-scale) because the TIA has a full-scale range of ±1 V.

Copyright © 2012–2014, Texas Instruments Incorporated

Typical Application (continued)

9.2.3 Application Curve

The dc component of the current from the PPG signal is referred to as *Pleth* (short for photoplethysmography) current. The input-referred noise current (referred differentially to the INP, INN inputs) as a function of the Pleth current is shown in Figure 113 at a PRF of 100 Hz and for various duty cycles of LED pulsing. For example, a duty cycle of 25% refers to a case where the LED is pulsed for 25% of the pulse repetition period and the receiver samples the photodiode current for the same period of time. The noise shown in Figure 113 is the integrated noise over a 5-Hz bandwidth from dc.

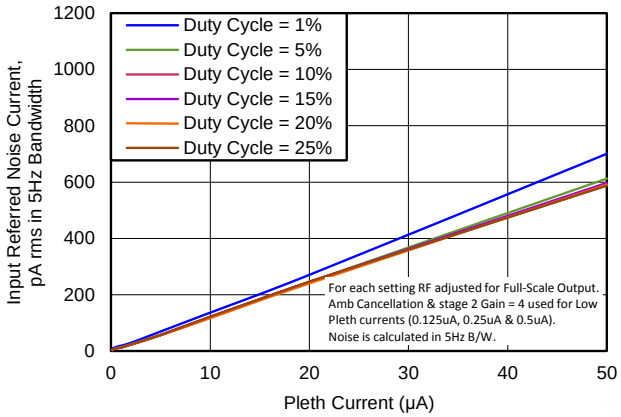

Figure 113. Input-Referred Noise Current vs Pleth Current (PRF = 100 Hz)

Copyright © 2012–2014, Texas Instruments Incorporated

10 Power Supply Recommendations

The AFE4400 has two sets of supplies: the receiver supplies (RX_ANA_SUP, RX_DIG_SUP) and the transmitter supplies (TX_CTRL_SUP, LED_DRV_SUP). The receiver supplies can be between 2.0 V to 3.6 V, whereas the transmitter supplies can be between 3.0 V to 5.25 V. Another consideration that determines the minimum allowed value of the transmitter supplies is the forward voltage of the LEDs being driven. The current source and switches inside the AFE require voltage headroom that mandates the transmitter supply to be a few hundred millivolts higher than the LED forward voltage. TX_REF is the voltage that governs the generation of the LED current from the internal reference voltage. Choosing the lowest allowed TX_REF setting reduces the additional headroom required but results in higher transmitter noise. Other than for the highest-end clinical SPO2 applications, this extra noise resulting from a lower TX_REF setting can be acceptable.

LED_DRV_SUP and TX_CTRL_SUP are recommended to be tied together to the same supply (between 3.0 V to 5.25 V). The external supply (connected to the common anode of the two LEDs) must be high enough to account for the forward drop of the LEDs as well as the voltage headroom required by the current source and switches inside the AFE. In most cases, this voltage is expected to fall below 5.25 V; thus the external supply can be the same as LED_DRV_SUP. However, there may be cases (for instance when two LEDs are connected in series) where the voltage required on the external supply is higher than 5.25 V. Such a case must be handled with care to ensure that the voltage on the TXP and TXN pins remains less than 5.25 V and never exceeds the supply voltage of LED_DRV_SUP, TX_CTRL_SUP by more than 0.3 V.

Many scenarios of power management are possible.

Case 1: The LED forward voltage is such that a voltage of 3.3 V is acceptable on LED_DRV_SUP. In this case, a single 3.3-V supply can be used to drive all four pins (RX_ANA_SUP, RX_DIG_SUP, TX_CTRL_SUP, LED_DRV_SUP). Care should be taken to provide some isolation between the transmit and receive supplies because LED_DRV_SUP carries the high-switching current from the LEDs.

Case 2: A low-voltage supply of 2.2 V is available in the system. In this case, a boost converter can be used to derive the voltage for LED_DRV_SUP, as shown in Figure 114.

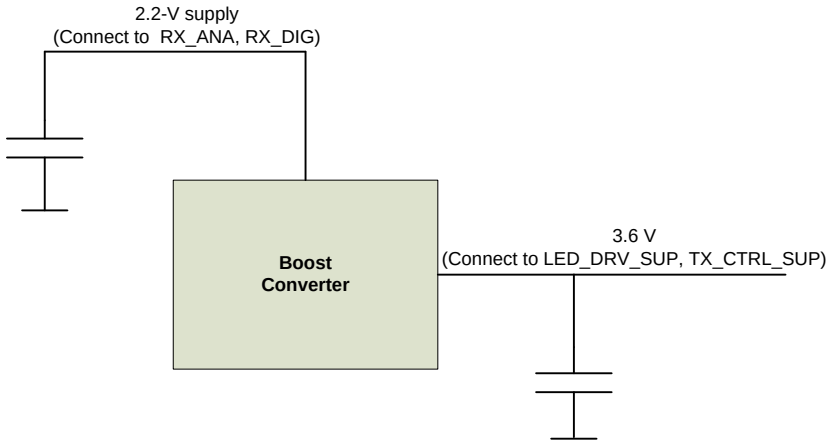

Figure 114. Boost Converter

The boost converter requires a clock (usually in the megahertz range) and there is usually a ripple at the boost converter output at this switching frequency. While this frequency is much higher than the signal frequency of interest (which is at maximum a few tens of hertz around dc), a small fraction of this switching noise can possibly alias to the low-frequency band. Therefore, TI strongly recommends that the switching frequency of the boost converter be offset from every multiple of the PRF by at least 20 Hz. This offset can be ensured by choosing the appropriate PRF.

Copyright © 2012–2014, Texas Instruments Incorporated

Case 3: In cases where a high-voltage supply is available in the system, a buck converter or an LDO can be used to derive the voltage levels required to drive RX_ANA and RX_DIG, as shown in Figure 115.

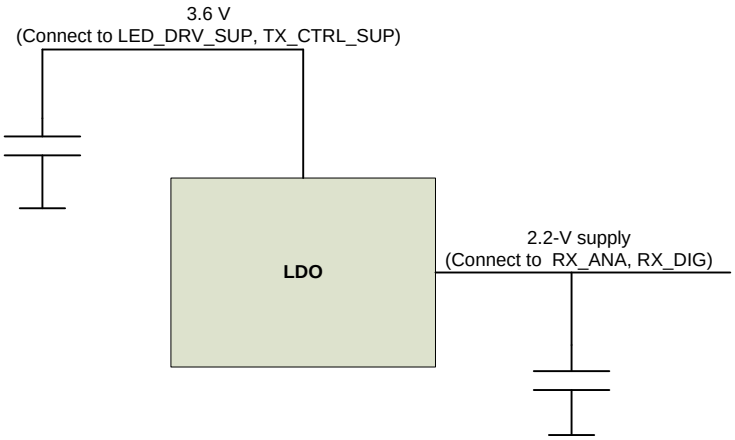

Figure 115. Buck Converter or an LDO

For more information on power-supply recommendations, see the *AFE44x0SPO2EVM User's Guide* (SLAU480).

Copyright © 2012–2014, Texas Instruments Incorporated

11 Layout

11.1 Layout Guidelines

Some key layout guidelines are mentioned below:

1. TXP, TXN are fast-switching lines and should be routed away from sensitive reference lines as well as from the INP, INN inputs.
2. If the INP, INN lines are required to be routed over a long trace, TI recommends that VCM be used as a shield for the INP, INN lines.
3. The device can draw high-switching currents from the LED_DRV_SUP pin. Therefore, TI recommends having a decoupling capacitor electrically close to the pin.

11.2 Layout Example

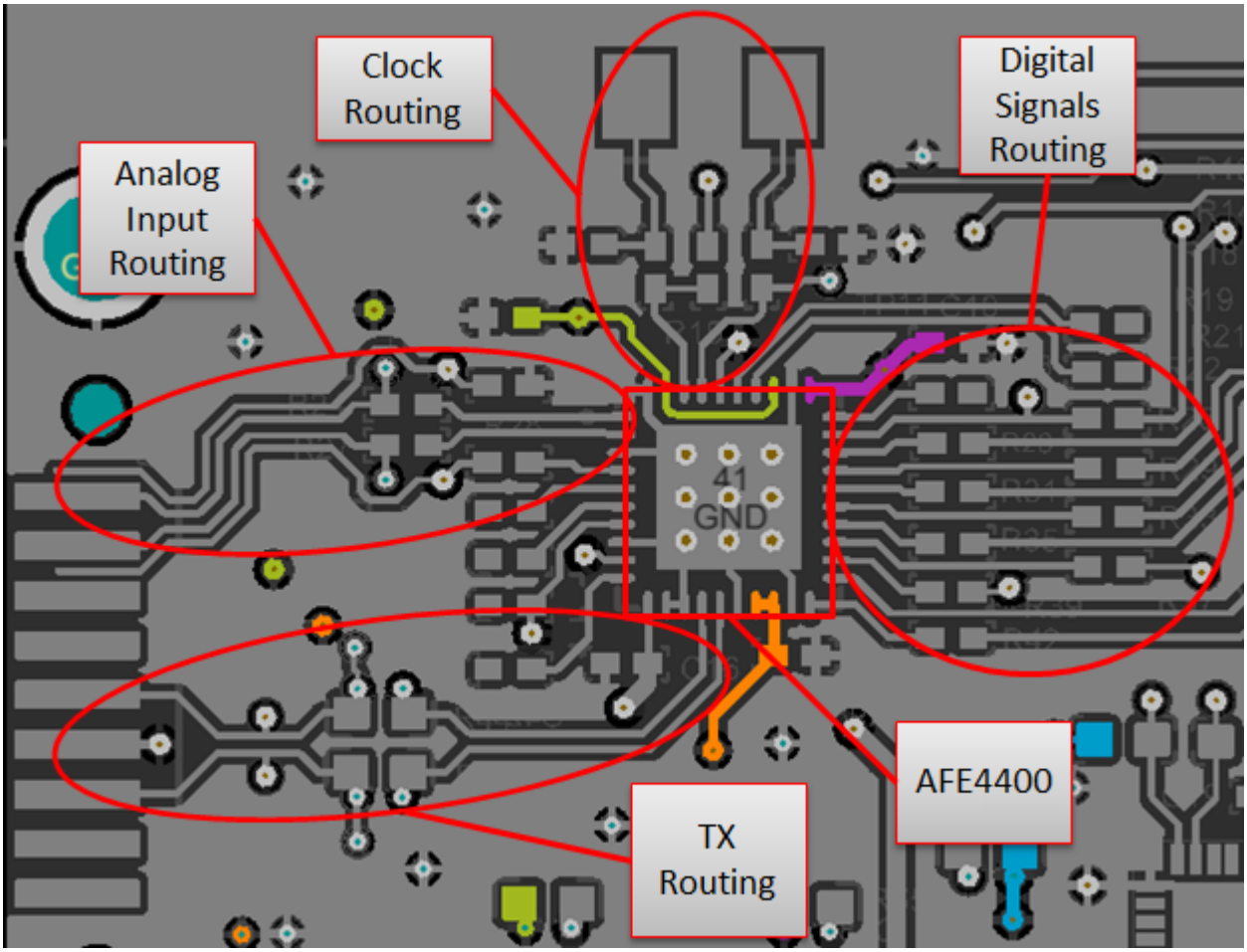

Figure 116. Typical Layout of the AFE4400 Board

Copyright © 2012–2014, Texas Instruments Incorporated

12 器件和文档支持

12.1 Trademarks

SPI is a trademark of Motorola.
All other trademarks are the property of their respective owners.

12.2 Electrostatic Discharge Caution



This integrated circuit can be damaged by ESD. Texas Instruments recommends that all integrated circuits be handled with appropriate precautions. Failure to observe proper handling and installation procedures can cause damage.

ESD damage can range from subtle performance degradation to complete device failure. Precision integrated circuits may be more susceptible to damage because very small parametric changes could cause the device not to meet its published specifications.

12.3 术语表

SLYZ022 — *TI 术语表*。

这份术语表列出并解释术语、首字母缩略词和定义。

13 机械封装和可订购信息

以下页中包括机械封装和可订购信息。 这些信息是针对指定器件可提供的最新数据。 这些数据会在无通知且不对本文档进行修订的情况下发生改变。 欲获得该数据表的浏览器版本，请查阅左侧的导航栏。

Copyright © 2012–2014, Texas Instruments Incorporated

PACKAGING INFORMATION

Orderable part number	Status (1)	Material type (2)	Package | Pins	Package qty | Carrier	RoHS (3)	Lead finish/ Ball material (4)	MSL rating/ Peak reflow (5)	Op temp (°C)	Part marking (6)
AFE4400RHAR	Active	Production	VQFN (RHA) | 40	2500 | LARGE T&R	Yes	NIPDAU	Level-3-260C-168 HR	0 to 70	AFE4400
AFE4400RHAR.A	Active	Production	VQFN (RHA) | 40	2500 | LARGE T&R	Yes	NIPDAU	Level-3-260C-168 HR	0 to 70	AFE4400
AFE4400RHAT	Active	Production	VQFN (RHA) | 40	250 | SMALL T&R	Yes	NIPDAU	Level-3-260C-168 HR	0 to 70	AFE4400
AFE4400RHAT.A	Active	Production	VQFN (RHA) | 40	250 | SMALL T&R	Yes	NIPDAU	Level-3-260C-168 HR	0 to 70	AFE4400

(1) **Status:** For more details on status, see our product life cycle.

(2) **Material type:** When designated, preproduction parts are prototypes/experimental devices, and are not yet approved or released for full production. Testing and final process, including without limitation quality assurance, reliability performance testing, and/or process qualification, may not yet be complete, and this item is subject to further changes or possible discontinuation. If available for ordering, purchases will be subject to an additional waiver at checkout, and are intended for early internal evaluation purposes only. These items are sold without warranties of any kind.

(3) **RoHS values:** Yes, No, RoHS Exempt. See the TI RoHS Statement for additional information and value definition.

(4) **Lead finish/Ball material:** Parts may have multiple material finish options. Finish options are separated by a vertical ruled line. Lead finish/Ball material values may wrap to two lines if the finish value exceeds the maximum column width.

(5) **MSL rating/Peak reflow:** The moisture sensitivity level ratings and peak solder (reflow) temperatures. In the event that a part has multiple moisture sensitivity ratings, only the lowest level per JEDEC standards is shown. Refer to the shipping label for the actual reflow temperature that will be used to mount the part to the printed circuit board.

(6) **Part marking:** There may be an additional marking, which relates to the logo, the lot trace code information, or the environmental category of the part.

Multiple part markings will be inside parentheses. Only one part marking contained in parentheses and separated by a "~" will appear on a part. If a line is indented then it is a continuation of the previous line and the two combined represent the entire part marking for that device.

Important Information and Disclaimer: The information provided on this page represents TI's knowledge and belief as of the date that it is provided. TI bases its knowledge and belief on information provided by third parties, and makes no representation or warranty as to the accuracy of such information. Efforts are underway to better integrate information from third parties. TI has taken and continues to take reasonable steps to provide representative and accurate information but may not have conducted destructive testing or chemical analysis on incoming materials and chemicals. TI and TI suppliers consider certain information to be proprietary, and thus CAS numbers and other limited information may not be available for release.

In no event shall TI's liability arising out of such information exceed the total purchase price of the TI part(s) at issue in this document sold by TI to Customer on an annual basis.

TAPE AND REEL INFORMATION

REEL DIMENSIONS

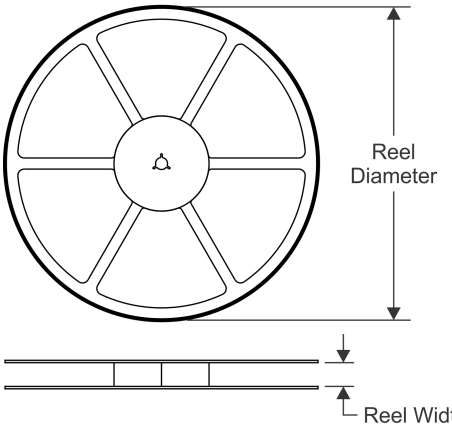

TAPE DIMENSIONS

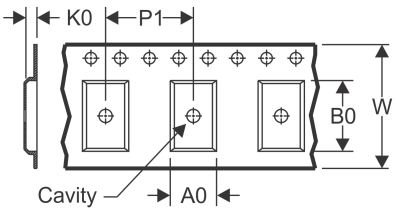

A0	Dimension designed to accommodate the component width
B0	Dimension designed to accommodate the component length
K0	Dimension designed to accommodate the component thickness
W	Overall width of the carrier tape
P1	Pitch between successive cavity centers

QUADRANT ASSIGNMENTS FOR PIN 1 ORIENTATION IN TAPE

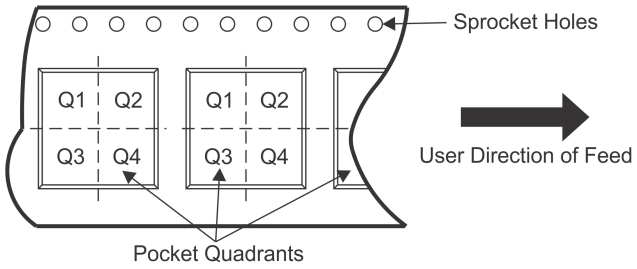

*All dimensions are nominal

Device	Package Type	Package Drawing	Pins	SPQ	Reel Diameter (mm)	Reel Width W1 (mm)	A0 (mm)	B0 (mm)	K0 (mm)	P1 (mm)	W (mm)	Pin1 Quadrant
AFE4400RHAR	VQFN	RHA	40	2500	330.0	16.4	6.3	6.3	1.1	12.0	16.0	Q2
AFE4400RHAT	VQFN	RHA	40	250	180.0	16.4	6.3	6.3	1.1	12.0	16.0	Q2

TAPE AND REEL BOX DIMENSIONS

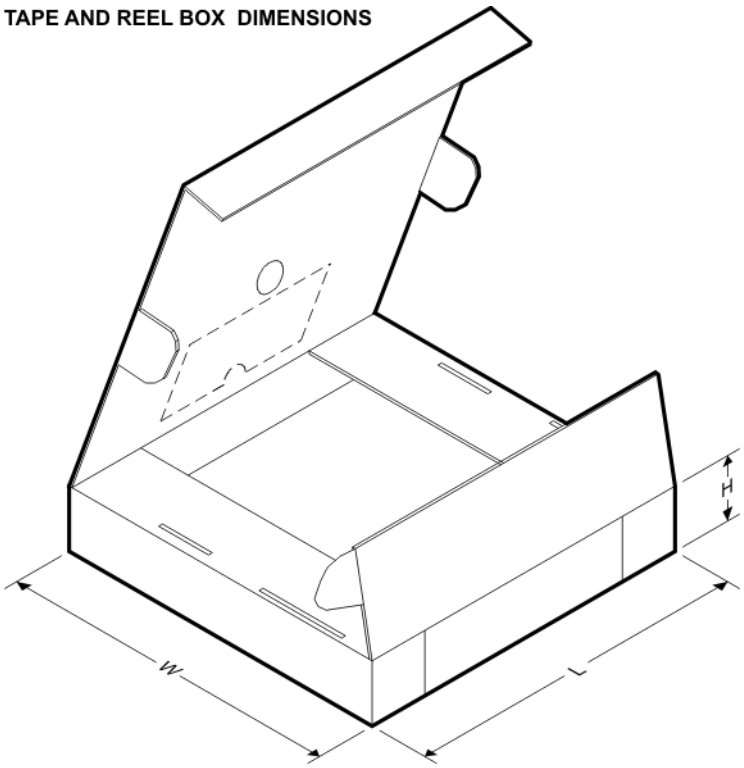

*All dimensions are nominal

Device	Package Type	Package Drawing	Pins	SPQ	Length (mm)	Width (mm)	Height (mm)
AFE4400RHAR	VQFN	RHA	40	2500	367.0	367.0	38.0
AFE4400RHAT	VQFN	RHA	40	250	210.0	185.0	35.0

GENERIC PACKAGE VIEW

RHA 40

VQFN - 1 mm max height

6 x 6, 0.5 mm pitch

PLASTIC QUAD FLATPACK - NO LEAD

This image is a representation of the package family, actual package may vary.
Refer to the product data sheet for package details.

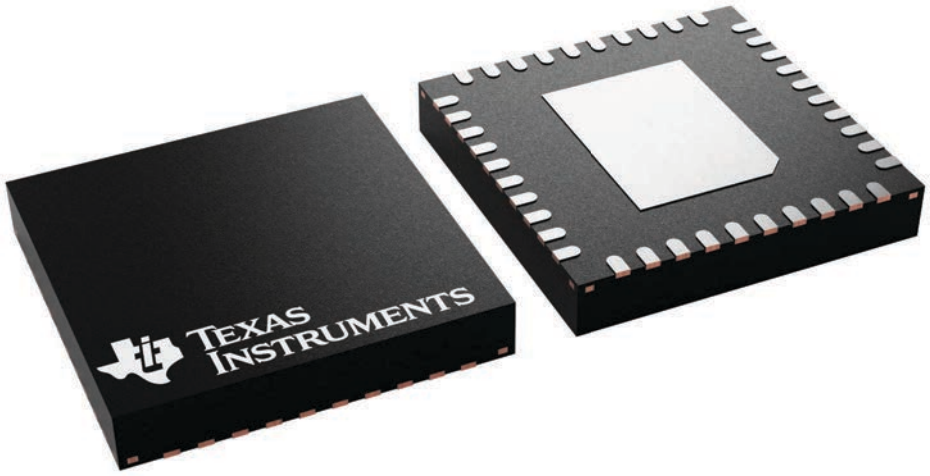

4225870/A

PACKAGE OUTLINE

RHA0040Y

VQFN - 1 mm max height

PLASTIC QUAD FLATPACK - NO LEAD

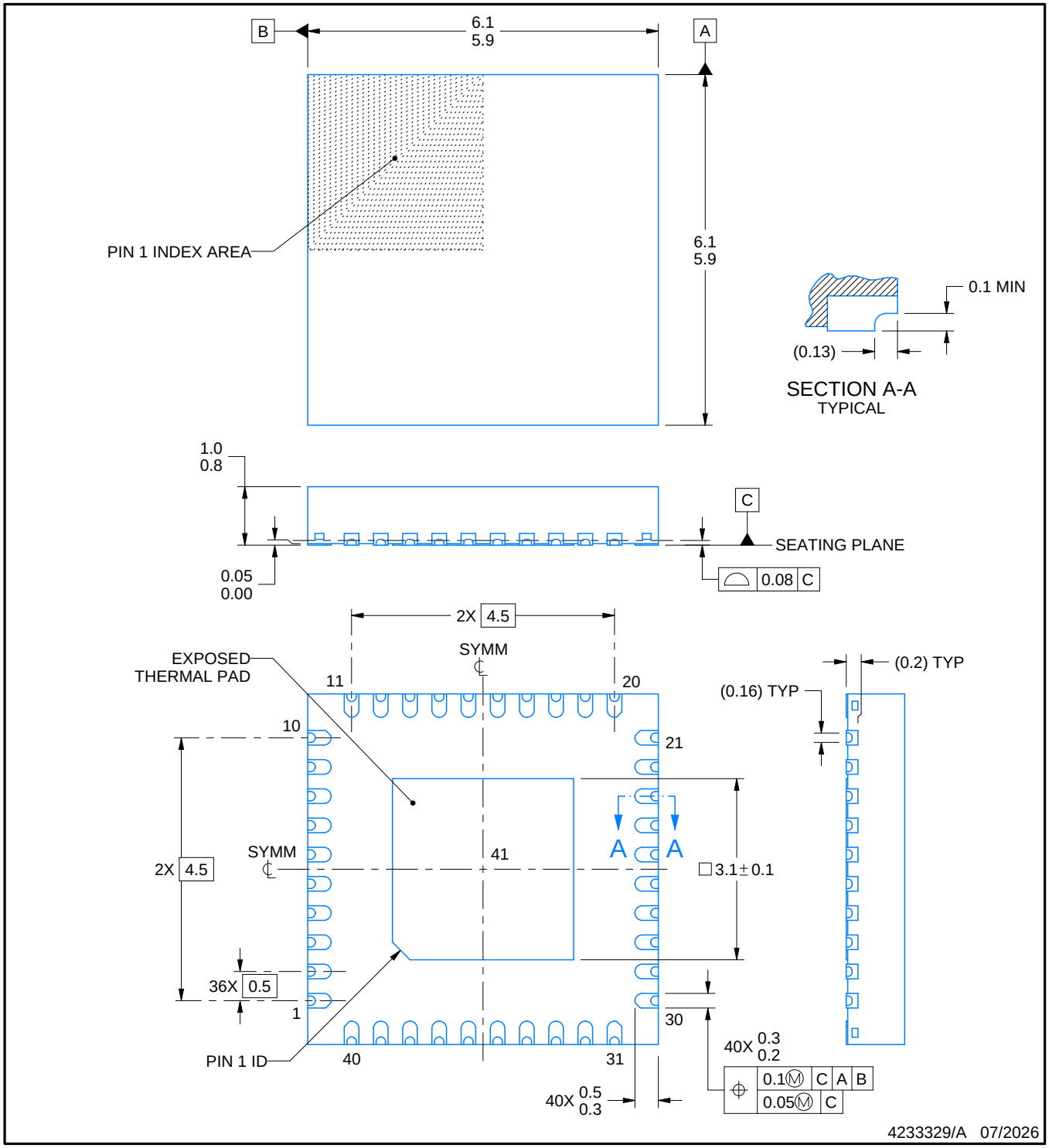

NOTES:

1. All linear dimensions are in millimeters. Any dimensions in parenthesis are for reference only. Dimensioning and tolerancing per ASME Y14.5M.
2. This drawing is subject to change without notice.
3. The package thermal pad must be soldered to the printed circuit board for thermal and mechanical performance.

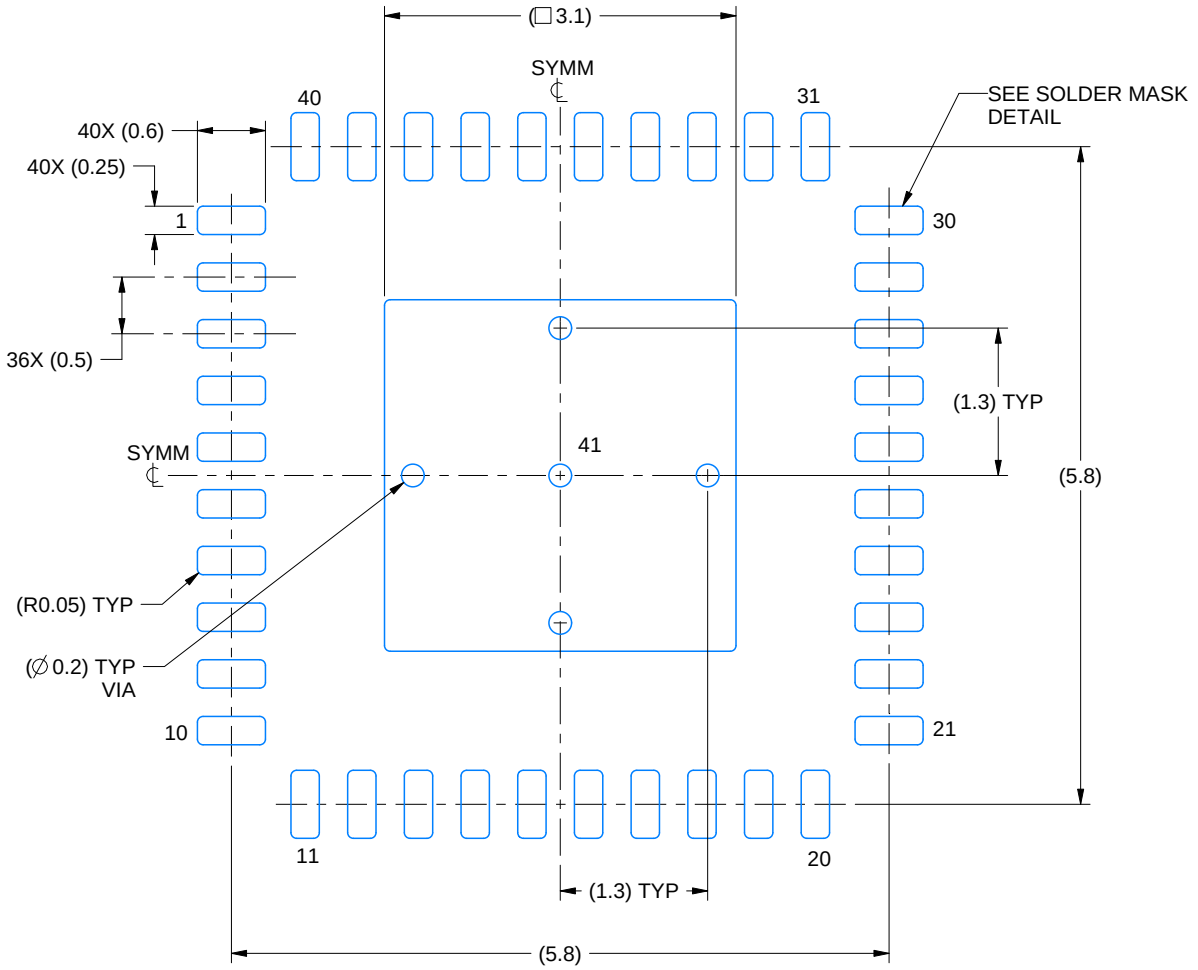

LAND PATTERN EXAMPLE
EXPOSED METAL SHOWN
SCALE: 15X

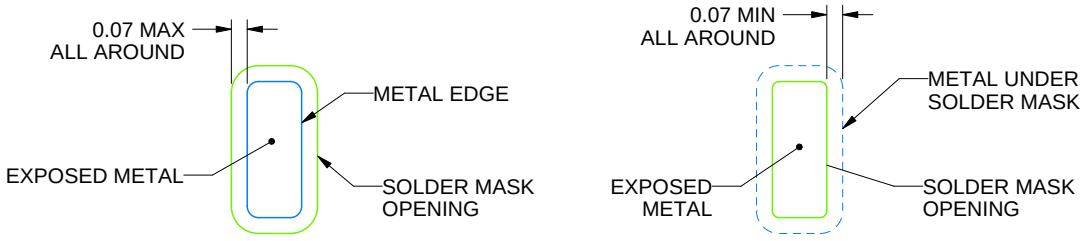

SOLDER MASK DETAILS

4233329/A 07/2026

NOTES: (continued)

4. This package is designed to be soldered to a thermal pad on the board. For more information, see Texas Instruments literature number SLUA271 (www.ti.com/lit/slua271).
5. Vias are optional depending on application, refer to device data sheet. If any vias are implemented, refer to their locations shown on this view. It is recommended that vias under paste be filled, plugged or tented.

EXAMPLE STENCIL DESIGN

RHA0040Y

VQFN - 1 mm max height

PLASTIC QUAD FLATPACK - NO LEAD

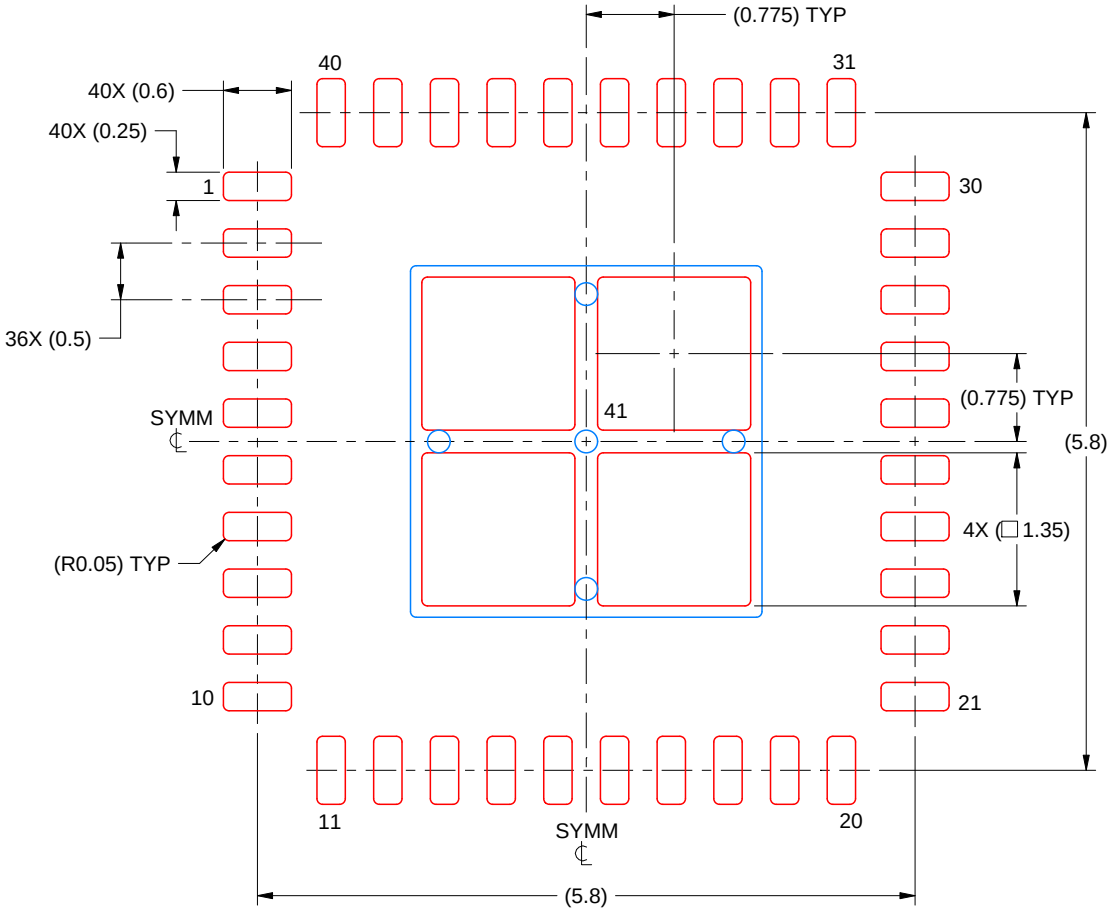

SOLDER PASTE EXAMPLE
BASED ON 0.125 MM THICK STENCIL
SCALE: 15X

EXPOSED PAD 41
76% PRINTED SOLDER COVERAGE BY AREA UNDER PACKAGE

4233329/A 07/2026

NOTES: (continued)

6. Laser cutting apertures with trapezoidal walls and rounded corners may offer better paste release. IPC-7525 may have alternate design recommendations.

重要通知和免责声明

TI“按原样”提供技术和可靠性数据（包括数据表）、设计资源（包括参考设计）、应用或其他设计建议、网络工具、安全信息和其他资源，不保证没有瑕疵且不做出任何明示或暗示的担保，包括但不限于对适销性、与某特定用途的适用性或不侵犯任何第三方知识产权的暗示担保。

这些资源可供使用 TI 产品进行设计的熟练开发人员使用。您将自行承担以下全部责任：(1) 针对您的应用选择合适的 TI 产品，(2) 设计、验证并测试您的应用，(3) 确保您的应用满足相应标准以及任何其他安全、安保法规或其他要求。

这些资源如有变更，恕不另行通知。TI 授权您仅可将这些资源用于研发本资源所述的 TI 产品的相关应用。严禁以其他方式对这些资源进行复制或展示。您无权使用任何其他 TI 知识产权或任何第三方知识产权。对于因您对这些资源的使用而对 TI 及其代表造成的任何索赔、损害、成本、损失和债务，您将全额赔偿，TI 对此概不负责。

TI 提供的产品受 TI 销售条款)、TI 通用质量指南 或 ti.com 上其他适用条款或 TI 产品随附的其他适用条款的约束。TI 提供这些资源并不会扩展或以其他方式更改 TI 针对 TI 产品发布的适用的担保或担保免责声明。 除非德州仪器 (TI) 明确将某产品指定为定制产品或客户特定产品，否则其产品均为按确定价格收入目录的标准通用器件。

TI 反对并拒绝您可能提出的任何其他或不同的条款。

版权所有 © 2026，德州仪器 (TI) 公司

最后更新日期：2025 年 10 月