TPS546C23 具有 PMBus 的 4.5V 至 18V、35A 可堆叠同步降压转换器

1 特性

- 符合 PMBus™1.3 规范的转换器：35A
- 两器件进行堆叠可实现高达 70A 的电流，同时具备分流功能
- 输入电压范围：4.5V 至 18V
- 输出电压范围：0.35V 至 5.5V
- 5mm × 7mm LQFN 封装
- 单个散热焊盘
- 集成 3.2mΩ 和 1.4mΩ 堆叠 NexFET™功率级
- 适用于自适应电压定标 (AVS) 功能和通过 PMBus 进行调整的基准电压为 350mV 至 1650mV
- 电压不低于 600mV 时的精度为 0.5%
- 无损低侧金属氧化物半导体场效应晶体管 (MOSFET) 电流感测
- 带有输入前馈的电压模式控制
- 差分远程感应
- 单启动至预偏置输出
- 输出电压和输出电流报告
- 内部芯片温度监控
- 可通过 ADDR0 和 ADDR1 引脚编程设定 64 种 PMBus 地址
- 可通过 PMBus 接口进行编程
  - VOUT_COMMAND 和 AVS VOUT 转换率
  - 通过热补偿进行过流保护
  - UVLO、软启动和软停止
  - 电源正常 (PGOOD)，过压 (OV)，欠压 (UV)，过热 (OT) 电平
  - 故障响应
  - 接通和关闭延迟
- 热关断
- 引脚配置适用的开关频率：200kHz 至 1MHz
- 与外部时钟或同步输出的输出时钟频率同步

2 应用范围

- 测试和测量仪器
- 以太网交换机、光交换机、路由器、基站
- 服务器
- 企业级存储固态硬盘 (SSD)
- 高密度电源解决方案

3 说明

TPS546C23器件是采用 5mm × 7mm 封装且符合 PMBus 1.3 规范的非隔离式 DC-DC 转换器，集成了 FET，能够在高频下运行并输出 35A 电流。两个 TPS546C23器件可以并联，以便产生高达 70A 的负载电流。通过针对少量功率级电流进行采样实现电流感测，与器件温度无关。集成 NexFET 功率级和优化驱动器提供高频低损耗开关功能，可实现超高密度电源解决方案。PMBus 接口通过 VOUT_COMMAND 启用 AVS 功能，同时支持灵活转换器配置以及关键参数监控功能（包括输出电压、电流和内部芯片温度监控）。对故障条件的响应可设为重启、锁存或忽略，具体取决于系统要求。

器件信息(1)

器件名称	封装	封装尺寸
TPS546C23	LQFN (40)	5.00mm x 7.00mm

(1) 要了解所有可用封装，请参见数据表末尾的可订购产品附录。

简化应用

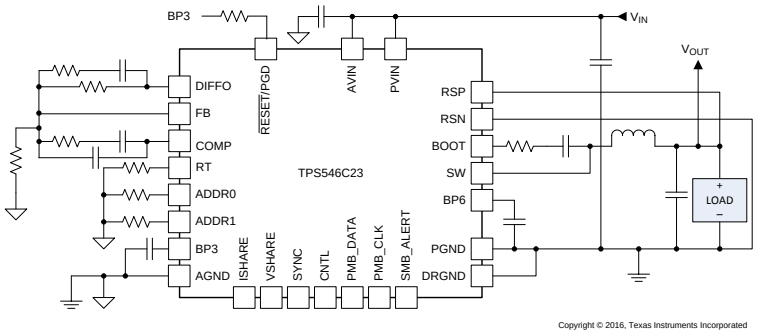

Copyright © 2016, Texas Instruments Incorporated

目录

1 特性 ... 1
2 应用范围 ... 1
3 说明 ... 1
4 修订历史记录 ... 2
5 **Pin Configuration and Functions** ... 3
6 **Specifications** ... 5
6.1 Absolute Maximum Ratings ... 5
6.2 ESD Ratings ... 5
6.3 Recommended Operating Conditions ... 5
6.4 Thermal Information ... 6
6.5 Electrical Characteristics ... 6
6.6 Typical Characteristics ... 10
7 **Detailed Description** ... 14
7.1 Overview ... 14
7.2 Functional Block Diagram ... 14
7.3 Feature Description ... 15
7.4 Device Functional Modes ... 32
7.5 Programming ... 32
7.6 Register Maps ... 34
8 **Applications and Implementation** ... 78
8.1 Application Information ... 78
8.2 Typical Application ... 78
9 **Power Supply Recommendations** ... 87
10 **Layout** ... 87
10.1 Layout Guidelines ... 87
10.2 Layout Example ... 88
10.3 Mounting and Thermal Profile Recommendation ... 88
11 器件和文档支持 ... 90
11.1 开发支持 ... 90
11.2 接收文档更新通知 ... 90
11.3 社区资源 ... 90
11.4 商标 ... 90
11.5 静电放电警告 ... 90
11.6 Glossary ... 90
12 机械、封装和可订购信息 ... 90

4 修订历史记录

注：之前版本的页码可能与当前版本有所不同。

Changes from Revision A (August 2016) to Revision B **Page**

- 已更改 *简化应用* 原理图 – 显示 ADDR0 和 ADDR1 引脚 ... 1
- Changed "VSEL" to "ADDR1", and "SS" to "ADDR0" in the *Absolute Maximum Ratings* table ... 5
- Deleted "FB" from the Input voltage VSEL, SS row of the *Absolute Maximum Ratings* table, and added "FB" to the SYNC, $\overline{\text{RESET}}$/PGD row ... 5
- Added $M_{IOUT(acc)}$ spec for ambient temp ... 9
- 已更改 图 23 by adding bus-sharing connections ... 15
- 已删除 "Read only " from the Default Behavior column of 表 4 for CMD Codes 78h through 80h ... 33

Changes from Original (July 2016) to Revision A **Page**

- 已更改 器件状态“*产品预览*”至“*量产数据*” ... 1

Copyright © 2016, Texas Instruments Incorporated

5 Pin Configuration and Functions

RVF Package
40-Pin LQFN With Exposed Thermal Pad
Top View

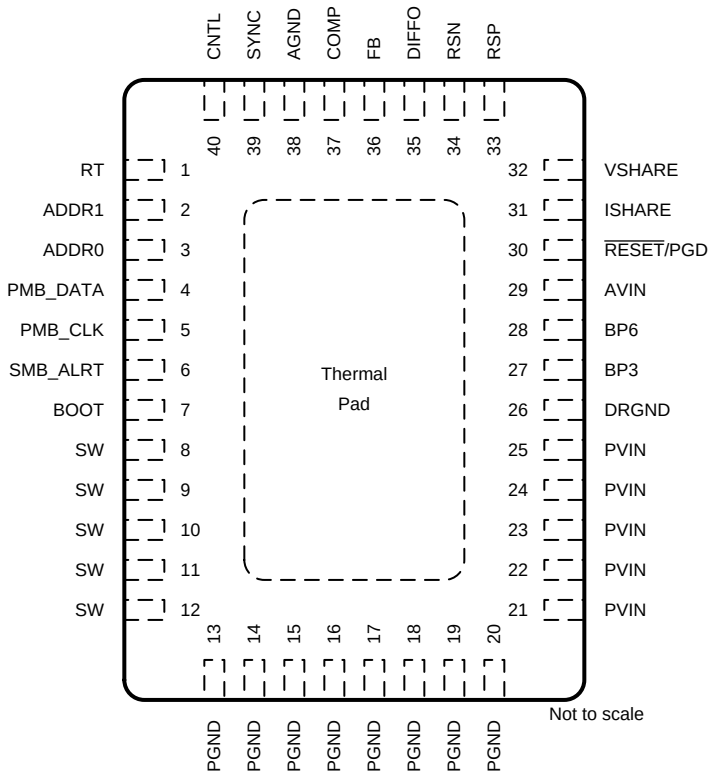

Pin Functions

PIN		I/O	DESCRIPTION
NAME	NO.		
ADDR0	3	I	Sets low-order 3-bits of the PMBus address. Connect a resistor between this pin and AGND.
ADDR1	2	I	Sets high-order 3-bits of the PMBus address. Connect a resistor between this pin and AGND.
AGND	38	—	Analog ground return for controller device. Connect this pin to PGND and DRGND at the thermal pad.
AVIN	29	I	Input power to the controller. Connect a low-impedance bypass with a minimum of 1 µF to PGND. The AVIN voltage is also used for input feed-forward. PVIN and AVIN must be the same potential for accurate short circuit protection.
BP3	27	O	Output of the 3.3-V onboard regulator. This regulator powers the controller and should be bypassed with a minimum of 2.2 µF to AGND. The BP3 pin is not designed to power external circuit.
BP6	28	O	Output of the 6.5-V onboard regulator. This regulator powers the driver stage of the controller and should be bypassed with a minimum of 2.2 µF to the thermal pad (power-stage ground, essentially PGND). TI recommends using an additional 100-nF (typical) bypass capacitor for reducing ripple on BP6. The low-impedance bypassing of this pin to PGND is critical.
BOOT	7	I/O	Bootstrap pin for the internal flying high-side driver. Connect a 100-nF (typical) capacitor from this pin to the SW pin. To reduce the voltage spike at SW, a BOOT resistor with a value between 1 Ω to 15 Ω can be placed in series with the BOOT capacitor to slow down turnon of the high-side FET.
CNTL	40	I	PMBus CNTL pin. See the *Supported PMBus Commands* section. The CNTL pin has an internal pullup and floats high when left floating.
COMP	37	O	Output of the error amplifier. Connect compensator network from this pin to the FB pin.
DIFFO	35	O	Output of the differential remote sense amplifier. This provides remote sensing for output voltage reporting and the voltage control loop. For the loop slave device in a 2-phase configuration, the DIFFO pin can be left floating.
DRGND	26	—	Power ground return for controller device. This pin should be directly connected to the thermal pad on the PCB board.

Copyright © 2016, Texas Instruments Incorporated

Pin Functions (continued)

PIN		I/O	DESCRIPTION
NAME	NO.		
FB	36	I	Feedback pin for the control loop. Negative input of the error amplifier. In 2-phase configuration, the FB pin of the loop slave device should be tied to the BP3 pin.
ISHARE	31	I/O	Current sharing signal for 2-phase operation. For a stand-alone device, the ISHARE pin can be left floating.
PGND	13	—	Power stage ground return. These pins are internally connected to the thermal pad.
	14		
	15		
	16		
	17		
	18		
	19		
	20		
PMB_CLK	5	I	PMBus CLK pin. See the *Supported PMBus Commands* section.
PMB_DATA	4	I/O	PMBus DATA pin. See the *Supported PMBus Commands* section.
PVIN	21	I	Input power to the power stage. Low-impedance bypassing of these pins to PGND is critical.
	22		
	23		
	24		
	25		
$\overline{\text{RESET}}$/PGD	30	I/O	This pin is for the output voltage reset or the power-good output. The function of this pin is determined by the user-accessible bit, EN_RESET_B, in the MFR_SPECIFIC_21 (E4h) register. The default of this pin is for the power-good indicator. For output voltage reset, this pin is a logic-low input. An internal pulldown of 750 kΩ is present so this pin requires a pullup resistor to enable the programming of VOUT. As the power-good indicator, this pin is an open-drain output which floats up to external pullup when the device is operation and in regulation. During any fault or warn conditions, this pin is pulled low. For details see 表 2. The PGD pin can be left floating when not used.
RSP	33	I	The positive input of the remote sense amplifier. For a stand-alone device or the loop master device in a 2-phase configuration, connect the RSP pin to the output voltage at the load. For the loop slave device in a 2-phase configuration, the remote sense amplifier is not required for output voltage sensing or regulation.
RSN	34	I	The negative input of the remote sense amplifier. For a stand-alone device or the loop master device in a 2-phase configuration, connect the RSN pin to the ground at the load. For the loop slave device in a 2-phase configuration, the remote sense amplifier is not required for output-voltage sensing or regulation.
RT	1	I	Frequency-setting resistor. Connect a resistor from this pin to AGND to program the switching frequency. Do not leave this pin floating.
SMB_ALRT	6	O	SMBus™ alert pin. See the *Supported PMBus Commands* section.
SW	8	I/O	Switched power output of the device. Connect the output averaging filter and bootstrap capacitor to this group of pins.
	9		
	10		
	11		
	12		
SYNC	39	I/O	For frequency synchronization. For the stand-alone device or the loop master device in a 2-phase configuration, with external pullup to the BP6 pin, the SYNC pin will be configured as SYNC-IN pin, and will be synchronized to the rising edge of the external clock applied to this pin. Otherwise, the SYNC pin will be configured as SYNC-OUT pin. For the loop slave device in a 2-phase configuration, the SYNC pin will always be SYNC-IN, and will be synchronized to the falling edge of the incoming clock on SYNC pin. Only 50% duty cycle external clock can be applied to the 2-phase stack to realize the interleaving of 2 phases. Applying an external clock to both the loop master and the loop slave device to synchronize the stack is optional. Without the external clock, the loop master device will output a 50% duty-cycle clock to the loop slave device and the slave device will be synchronized to the falling edge of the clock. The SYNC pin can be left floating when not used.
VSHARE	32	I/O	Voltage sharing signal for 2-phase operation. For stand-alone device, the VSHARE pin can be left floating.
Thermal pad		—	Package thermal pad, internally connected to PGND. The thermal pad must have adequate solder coverage for proper operation.

Copyright © 2016, Texas Instruments Incorporated

6 Specifications

6.1 Absolute Maximum Ratings

over operating free-air temperature range (unless otherwise noted) (1)

		MIN	MAX	UNIT
Input voltage	PVIN, AVIN	–0.3	18	V
	PVIN, AVIN< 2 ms transient	–0.3	19	
	PVIN - SW (PVIN to SW differential)	–0.3	25	
	PVIN - SW (PVIN to SW differential, < 10-ns transient because of SW ringing)	–5	25	
	BOOT	–0.3	37	
	BOOT – SW (BOOT to SW differential)	–0.3	7	
	PMB_CLK, PMB_DATA	–0.3	5.5	
	ADDR1, ADDR0	–0.3	3.6	
	SYNC, $\overline{\text{RESET}}$/PGD, CNTL, RSP, RSN, RT, ISHARE, FB	–0.3	7	
Output voltage	SW	–1	25	V
	SW < 100 ns transient	–5	25	
	BP6, COMP, DIFFO, VSHARE	–0.3	7	
	SMB_ALRT	–0.3	5.5	
	BP3	–0.3	3.6	
Operating junction temperature, T_J		–40	150	°C
Storage temperature, T_{stg}		–55	150	°C

(1) Stresses beyond those listed under *Absolute Maximum Ratings* may cause permanent damage to the device. These are stress ratings only, which do not imply functional operation of the device at these or any other conditions beyond those indicated under *Recommended Operating Conditions*. Exposure to absolute-maximum-rated conditions for extended periods may affect device reliability.

6.2 ESD Ratings

			VALUE	UNIT
$V_{(ESD)}$	Electrostatic discharge	Human-body model (HBM), per ANSI/ESDA/JEDEC JS–001 (1)	±2000	V
		Charged-device model (CDM), per JEDEC specification JESD22-C101 (2)	±1500	

(1) JEDEC document JEP155 states that 500-V HBM allows safe manufacturing with a standard ESD control process.
(2) JEDEC document JEP157 states that 250-V CDM allows safe manufacturing with a standard ESD control process.

6.3 Recommended Operating Conditions

over operating free-air temperature range (unless otherwise noted)

		MIN	NOM	MAX	UNIT
V_{AVIN}	Controller input voltage	4.5	12	18	V
V_{PVIN}	Power stage input voltage	4.5	12	18	V
T_J	Junction temperature	–40		125	°C

Copyright © 2016, Texas Instruments Incorporated

6.4 Thermal Information

THERMAL METRIC(1)		TPS546C23 RVF (PQFN) 40 PINS	UNIT
$R_{\theta JA}$	Junction-to-ambient thermal resistance	28.5	°C/W
$R_{\theta JC(top)}$	Junction-to-case (top) thermal resistance	18	°C/W
$R_{\theta JB}$	Junction-to-board thermal resistance	3.8	°C/W
ψ_{JT}	Junction-to-top characterization parameter	1	°C/W
ψ_{JB}	Junction-to-board characterization parameter	3.8	°C/W
$R_{\theta JC(bot)}$	Junction-to-case (bottom) thermal resistance	0.7	°C/W

(1) For more information about traditional and new thermal metrics, see the *Semiconductor and IC Package Thermal Metrics* application report (SPRA953).

6.5 Electrical Characteristics

T_J = –40°C to 125°C, V_{PVIN} = V_{AVIN}= 12 V, R_{RT} = 40.2 kΩ; zero power dissipation (unless otherwise noted)

PARAMETER		TEST CONDITIONS	MIN	TYP	MAX	UNIT
INPUT SUPPLY						
V_{AVIN}	Input supply voltage range		4.5		18	V
V_{PVIN}	Power stage voltage range		4.5		18	
I_{AVIN}	Input Operating Current	Not switching		7.7	12	mA
UVLO						
VIN_ON	Input turnon voltage	Factory default setting		4.5		V
		Programmable range, 15 different settings	4.25		7.75	
		Accuracy	–5%		5%	
VIN_OFF	Input turnoff voltage	Factory default setting		4		V
		Programmable range, 15 different settings	4		7.5	
		Accuracy	–5%		5%	
ERROR AMPLIFIER AND FEEDBACK VOLTAGE						
V_{FB}	Feedback pin voltage	Default setting		600		mV
		Setpoint range(1)	0.35		1.65	V
		Setpoint resolution(1)		2^{-9}		V
$V_{FB(ACC)}$	Feedback pin voltage accuracy	V_{FB} = 600 mV, 0°C ≤ T_J ≤ 85°C(2)	–0.5%		0.5%	%
		V_{FB} = 600 mV, -40°C ≤ T_J ≤ 125°C(2)	–1%		1%	
		V_{FB} = 1650 mV, -40°C ≤ T_J ≤ 125°C(2)	–1%		1%	
		V_{FB} = 350 mV, -40°C ≤ T_J ≤ 125°C(2)	–1.5%		1.5%	
A_{OL}	Open-loop gain(1)		80			dB
G_{BWP}	Gain bandwidth product(1)		15			MHz
I_{FB}	FB pin input bias current	V_{FB} = 0.6 V	-75		75	nA
I_{COMP}	Sourcing	V_{FB} = 0 V	1			mA
	Sinking	V_{FB} = 1.2 V	1			mA
OSCILLATOR						
f_{SW}	Adjustment range(2)		200		1000	kHz
	Switching frequency(2)	R_{RT} = 40.2 kΩ	450	500	550	kHz
V_{RMP}	Ramp peak-to-peak(1)			V_{AVIN}/6.5		V
V_{VLY}	Valley voltage(1)			1.23		V
SYNCHRONIZATION						
$V_{IH(sync)}$	High-level input voltage		2.2			V
$V_{IL(sync)}$	Low-level input voltage				0.80	V
$T_{pw(sync)}$	Sync input iminimum pulse width	Fsw = 160kHz to 1.2MHz			200	ns

(1) Specified by design. Not production tested.
(2) The parameter covers 4.5 V to 18 V of AVIN.

Copyright © 2016, Texas Instruments Incorporated

Electrical Characteristics (continued)

T_J = –40°C to 125°C, V_{PVIN} = V_{AVIN}= 12 V, R_{RT} = 40.2 kΩ; zero power dissipation (unless otherwise noted)

PARAMETER		TEST CONDITIONS	MIN	TYP	MAX	UNIT
$T_{Mdelay(sync)}$	Delay from the rising edge of SYNC input to the SW rising edge of the loop master device			515		ns
$T_{S\ delay(sync)}$	Delay from the falling edge of SYNC input to the SW rising edge of the loop slave device			515		ns
f_{SYNC}	Synchronization frequency		160		1200	kHz
Δf_{SYNC}	SYNC pin frequency range from free running frequency(1)		–20%		20%	
RESET						
$V_{IH(reset)}$	High-level input voltage(1)		1.35			V
$V_{IL(reset)}$	Low-level input voltage				0.8	
$T_{pw(reset)}$	Minimum RESET_B pulse width		200			ns
BP6 REGULATOR						
V_{BP6}	Regulator output voltage	I_{BP6} = 10 mA	5.85	6.4	6.95	V
$V_{BP6(do)}$	Regulator dropout voltage	$V_{AVIN} – V_{BP6}$, V_{AVIN} = 4.5 V, I_{BP6} = 25 mA	100	200	400	mV
I_{BP6SC}	Regulator short-circuit current(1)	V_{AVIN} = 12 V		150		mA
V_{BP6UV}	Regulator UVLO voltage(1)			3.73		V
$V_{BP6UV(hyst)}$	Regulator UVLO voltage hysteresis(1)			270		mV
BOOTSTRAP						
$V_{BOOT(drop)}$	Bootstrap voltage drop	I_{BOOT} = 5 mA			150	mV
BP3 REGULATOR						
V_{BP3}	3-V regulator output voltage	V_{AVIN} ≥ 4.5 V, I_{BP3} = 5 mA	3	3.2	3.4	V
I_{BP3SC}	3-V regulator short-circuit current(1)		18	35		mA
PWM						
$T_{ON(min)}$	Minimum controllable pulse width(1)				100	ns
$T_{OFF(min)}$	Minimum off-time(1)			515	550	ns
SOFT START						
TON_RISE	Soft-start time	Factory default setting		3		ms
		Programmable range, 16 discrete settings(1) (3)	0		100	
		Accuracy, TON_RISE = 3 ms, VOUT_COMMAND = 0.95 V	–10%		10%	
TON_MAX_FAULT_LIMIT	Upper limit on the time to power up the output	Factory default setting(4)		0		ms
		Programmable range, 16 discrete settings(1) (4)	0		100	
		Accuracy(1)	–10%		10%	
TON_DELAY	Turn-on delay	Factory default setting		0		ms
		Programmable range, 16 discrete settings(1)	0		100	
		Accuracy(1)	–10%		10%	
SOFT STOP						
TOFF_FALL	Soft-stop time	Factory default setting(5)		0		ms
		Programmable range, 16 discrete settings(1) (5)	0		100	
		Accuracy, TOFF_FALL = 1 ms, VOUT_COMMAND = 0.95V	–10%		10%	
TOFF_DELAY	Turn-off delay	Factory default setting		0		ms
		Programmable range, 16 discrete settings(1)	0		100	
		Accuracy(1)	–10%		10%	
REMOTE SENSE AMPLIFIER						

(3) The setting of TON_RISE of 0 ms means the unit to bring its output voltage to the programmed regulation value as quickly as possible, which results in an effective TON_RISE time of 1 ms (fastest time supported).
(4) The setting of TON_MAX_FAULT_LIMIT of 0 means disabling TON_MAX_FAULT response and reporting completely.
(5) The setting of TOFF_FALL of 0 ms means the unit to bring its output voltage down to 0 as quickly as possible, which results in an effective TOFF_FALL time of 1 ms (fastest time supported).

Copyright © 2016, Texas Instruments Incorporated

Electrical Characteristics (continued)

T_J = –40°C to 125°C, V_{PVIN} = V_{AVIN}= 12 V, R_{RT} = 40.2 kΩ; zero power dissipation (unless otherwise noted)

PARAMETER		TEST CONDITIONS	MIN	TYP	MAX	UNIT
$V_{DIFFO(ERROR)}$	Error Voltage from DIFFO to (RSP – RSN)	(V_{RSP} – V_{RSN}) = 0.6 V	–4		4	mV
		(V_{RSP} – V_{RSN}) = 1.2 V	–5		5	
		(V_{RSP} – V_{RSN}) = 3 V	–15		15	
BW	Closed-loop bandwidth(1)		2			MHz
$V_{DIFFO(max)}$	Maximum DIFFO output voltage				V_{BP6}–0.2	V
I_{DIFFO}	DIFFO sourcing current		1			mA
	DIFFO sinking current		1			mA
POWER STAGE						
R_{HS}	High-side power device on-resistance	V_{BOOT} - V_{SW} = 4.5 V, T_J = 25°C		3.5		mΩ
		V_{BOOT} - V_{SW} = 6.3V, T_J = 25°C		3.2		mΩ
R_{LS}	Low-side power device on-resistance	V_{AVIN} = 4.5 V, T_J = 25°C		1.5		mΩ
		V_{AVIN} ≥ 12 V, T_J = 25°C		1.4		mΩ
$T_{DEAD(LtoH)}$	Power stage driver dead-time from Low-side off to High-side on	V_{AVIN} ≥ 12 V, T_J = 25°C(1)		15		ns
$T_{DEAD(HtoL)}$	Power stage driver dead-time from High-side off to Low-side on	V_{AVIN} ≥ 12 V, T_J = 25°C(1)		15		ns
CURRENT SHARING						
$I_{SHARE(acc)}$	Output current sharing accuracy of two devices defined as the ratio of the current difference between two devices to the total current	I_{OUT} ≥ 20 A per device	–15%		15%	
	Output current sharing accuracy of two devices defined as the current difference between each device and the half of total current	I_{OUT} < 20 A per device	–3		3	A
LOW-SIDE CURRENT LIMIT PROTECTION						
$t_{OFF(OC)}$	Off time between restart attempts(1)			7 × TON_RISE		ms
IOUT_OC_FAULT_LIMIT	Output current overcurrent fault threshold	Factory default setting		42		A
		Programmable range	5		52	
I_{NEGOC}	Negative output current overcurrent protection threshold		–60	-40	–20	A
IOUT_OC_WARN_LIMIT	Output current overcurrent warning threshold	Factory default setting		37		A
		Programmable range	4		50	
$I_{OC(acc)}$	Output current overcurrent fault accuracy	I_{OUT} ≥ 20 A	–15%		15%	
HIGH-SIDE SHORT CIRCUIT PROTECTION						
I_{HSOC}	High-side short-circuit protection fault threshold	(V_{BOOT}-VSW) = 6.3V, T_J = 25°C		65		A
POWER GOOD (PGOOD) AND OVERVOLTAGE/UNDERVOLTAGE WARNING						
R_{PGD}	PGD pulldown resistance	V_{DIFFO} = 0, I_{PGD} = 5 mA		45	60	Ω
$I_{PGD(OH)}$	Output high open drain leakage current into PGD pin	V_{PGD} = 5 V			15	µA
$V_{PGD(OL)}$	PGD pin output low level voltage at no supply voltage	V_{AVIN}=0, I_{PGD} = 80 µA			0.8	V
V_{FBOVW}	Overvoltage warning threshold at FB pin (PGD fault threshold on rising)	Factory default, at V_{REF} = 600 mV	108	112	116	% V_{REF}
V_{FBUVW}	Undervoltage warning threshold at FB pin (PGD fault threshold on falling)	Factory default, at V_{REF} = 600 mV	84	88	92	% V_{REF}
$V_{PGD(rise)}$	PGD good threshold on rising and Undervotlage warning threshold de-assertation threshold at FB pin	V_{REF} = 600 mV		95		% V_{REF}
$V_{PGD(fall)}$	PGD good threshold on falling and Overvotlage warning threshold de-assertation threshold at FB pin	V_{REF} = 600 mV		105		% V_{REF}
OUTPUT OVERVOLTAGE AND UNDERVOLTAGE FAULT PROTECTION						

Copyright © 2016, Texas Instruments Incorporated

Electrical Characteristics (continued)

T_J = –40°C to 125°C, V_{PVIN} = V_{AVIN}= 12 V, R_{RT} = 40.2 kΩ; zero power dissipation (unless otherwise noted)

PARAMETER		TEST CONDITIONS		MIN	TYP	MAX	UNIT
V_{FBOVF}	Overvoltage fault threshold at FB pin	Factory default, at V_{REF} = 600 mV		113	117	121	% V_{REF}
V_{FBUVF}	Undervoltage fault threshold at FB pin	Factory default, at V_{REF} = 600mV		79	83	87	% V_{REF}
OUTPUT VOLTAGE TRIMMIN8							
V_{FBRES}	Resolution of FB steps with VOUT_COMMAND, Trim and Margin				2^{-9}		V
VOUT_TRANSITION_RATE	Output voltage transition rate	Factory default setting			1		mV/µs
		Programmable range, 8 discrete settings		0.067		1.5	
		Accuracy		–10%		10%	
VOUT_SCALE_LOOP	Feedback loop scaling factor	Factory default setting			1		
		Programmable range, 3 discrete settings		0.25		1	
VOUT_COMMAND	Output voltage programmable register value, multiply by 2^{-9} to get output voltage	Factor default setting			307		
		Programmable range	VOUT_SCALE_LOOP = 1	179		845	
			VOUT_SCALE_LOOP = 0.5 (1)	358		1690	
			VOUT_SCALE_LOOP = 0.25 (1)	716		2816	
TEMPERATURE SENSE AND THERMAL SHUTDOWN							
T_{SD}	Junction thermal shutdown temperature (1)			135	145	160	°C
T_{HYST}	Junction thermal shutdown hysteresis (1)				25		°C
OT_FAULT_LIMIT	Internal overtemperature fault limit (1)	Factory default setting			145		°C
		Programmable range		120		165	
OT_WARN_LIMIT	Internal overtemperature warning limit (1)	Factory default setting			120		°C
		Programmable range		100		140	
$T_{OT(hys)}$	Internal overtemperature fault, warning hysteresis (1)			15	20	25	°C
MEASUREMENT SYSTEM							
$M_{VOUT(rng)}$	Output voltage measurement range (1)			0		5.8	V
$M_{VOUT(acc)}$	Output voltage measurement accuracy	DIFFO = 1.2 V		–2%		2%	%
$M_{VOUT(lsb)}$	Output voltage measurement bit resolution (1)				2^{-9}		V
$M_{IOUT(rng)}$	Output current measurement range (1)			0		52	A
$M_{IOUT(acc)}$	Output current measurement accuracy	I_{OUT} 20 A, T_J= 25°C		–10%	0	10%	
		I_{OUT} ≥ 20 A		–15%		15%	
		3A ≤ I_{OUT} <20 A		–3		3	A
$M_{IOUT(lsb)}$	Output current measurement bit resolution (1)				62.5		mA
$M_{TSNS(rng)}$	Internal temperature sense range (1)			-40		165	°C
$M_{TSNS(acc)}$	Internal temperature sense accuracy (1)	-40°C ≤ T_J ≤ 165°C		–5		5	°C
$M_{TSNS(lsb)}$	Internal temperature sense bit resolution (1)				1		°C
PMBUS INTERFACE							
$V_{IH(PMBUS)}$	High-level input voltage on PMB_CLK, PMB_DATA, CNTL			1.35			V
$V_{IL(PMBUS)}$	Low-level input voltage on PMB_CLK, PMB_DATA, CNTL					0.8	V
VhysCNTL	Hysteresis on CNTL				170		mV
$I_{IH(PMBUS)}$	Input high level current into PMB_CLK, PMB_DATA			–10		10	µA
$I_{IL(PMBUS)}$	Input low level current into PMB_CLK, PMB_DATA			–10		10	µA
I_{CNTL}	CNTL pin pullup current			5		10	µA
$V_{OL(PMBUS)}$	Output low level voltage on PMB_DATA, SMB_ALRT	V_{AVIN} > 4.5 V, input current to PMB_DATA, SMB_ALRT = 4 mA				0.4	V
$I_{OH(PMBUS)}$	Output high level open drain leakage current into PMB_DATA, SMB_ALRT	Voltage on PMB_DATA, SMB_ALRT = 5.5 V				10	µA

Copyright © 2016, Texas Instruments Incorporated

Electrical Characteristics (continued)

T_J = –40°C to 125°C, V_{PVIN} = V_{AVIN}= 12 V, R_{RT} = 40.2 kΩ; zero power dissipation (unless otherwise noted)

PARAMETER		TEST CONDITIONS	MIN	TYP	MAX	UNIT
$I_{OL(PMBUS)}$	Output low level open drain leakage current into PMB_DATA, SMB_ALRT	Voltage on PMB_DATA, SMB_ALRT < 0.4 V	4			mA
F_{PMBUS}	PMBus operating frequency range	Slave mode	10		400	kHz

6.6 Typical Characteristics

V_{PIN} = V_{AVIN} = 12 V, T_A = 25 ºC, R_{RT} = 40.2 kΩ (unless otherwise specified). Safe operating area curves were measured using a Texas Instruments evaluation module (EVM).

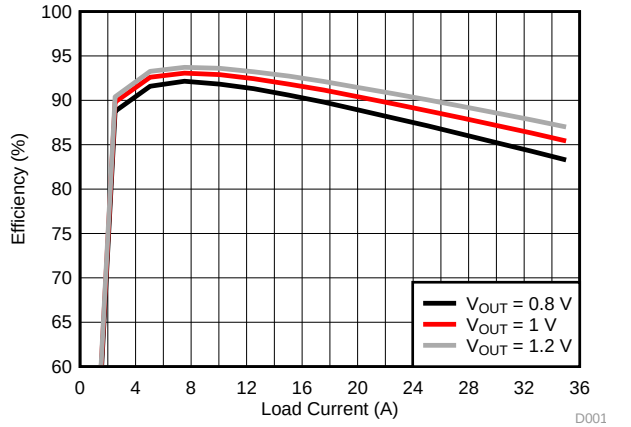

V_{IN} = 5 V L = 300 nH Snubber = 1 nF + 1Ω
f_{SW} = 300 kHz R_{DCR} = 0.2 mΩ R_{BOOT} = 0 Ω

图 1. Efficiency vs Output Current

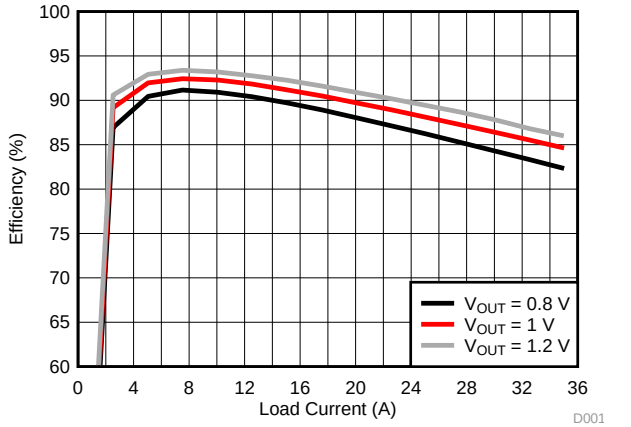

V_{IN} = 5 V L = 300 nH Snubber = 1 nF + 1Ω
f_{SW} = 500 kHz R_{DCR} = 0.2 mΩ R_{BOOT} = 0 Ω

图 2. Efficiency vs Output Current

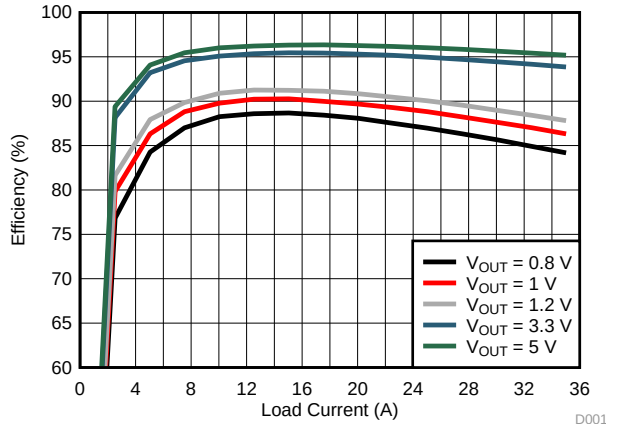

V_{IN} = 12 V L = 300 nH Snubber = 1 nF + 1Ω
f_{SW} = 300 kHz R_{DCR} = 0.2 mΩ R_{BOOT} = 0 Ω

图 3. Efficiency vs Output Current

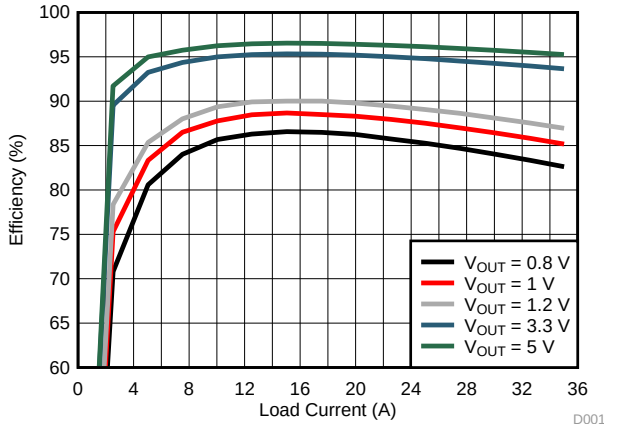

V_{IN} = 12 V L = 300 nH Snubber = 1 nF + 1Ω
f_{SW} = 500 kHz R_{DCR} = 0.2 mΩ R_{BOOT} = 0 Ω

图 4. Efficiency vs Output Current

版权 © 2016, Texas Instruments Incorporated

Typical Characteristics (接下页)

V_{PIN} = V_{AVIN} = 12 V, T_A = 25 ºC, R_{RT} = 40.2 kΩ (unless otherwise specified). Safe operating area curves were measured using a Texas Instruments evaluation module (EVM).

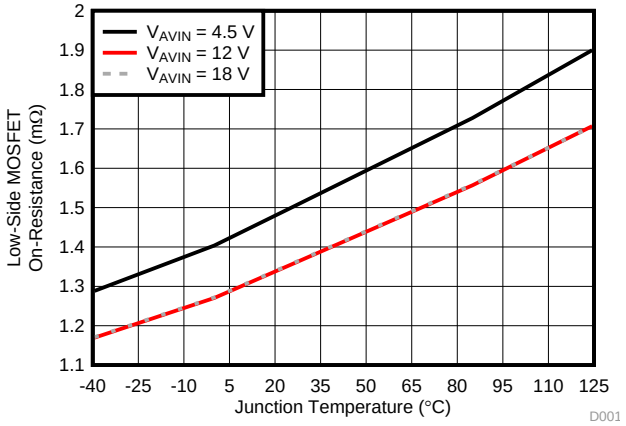

图 5. Low-Side MOSFET On-Resistance ($R_{DS(on)}$) vs Junction Temperature

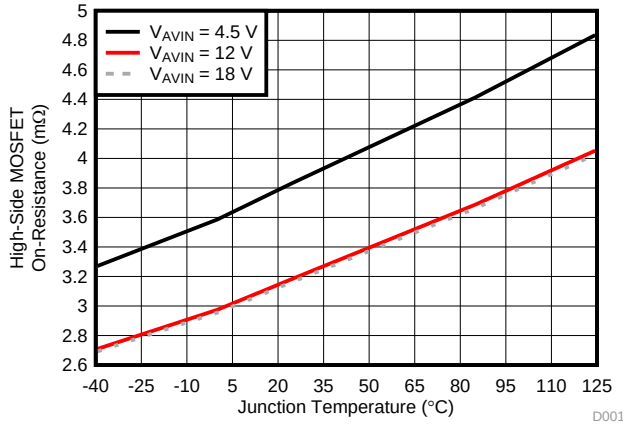

图 6. High-Side MOSFET On-Resistance ($R_{DS(on)}$) vs Junction Temperature

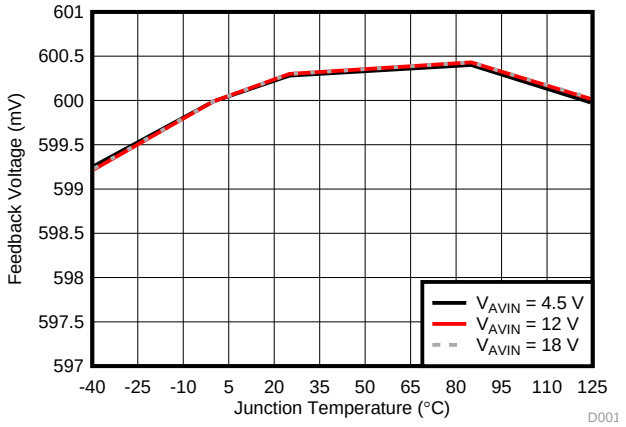

V_{FB} = 600 mV

图 7. Feedback Voltage vs Junction Temperature

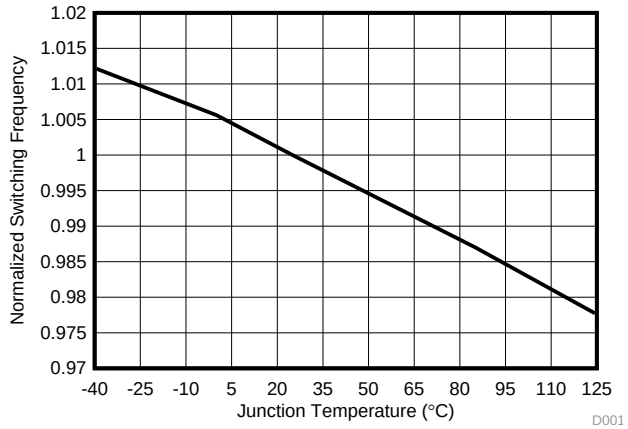

图 8. Normalized Switching Frequency vs Junction Temperature

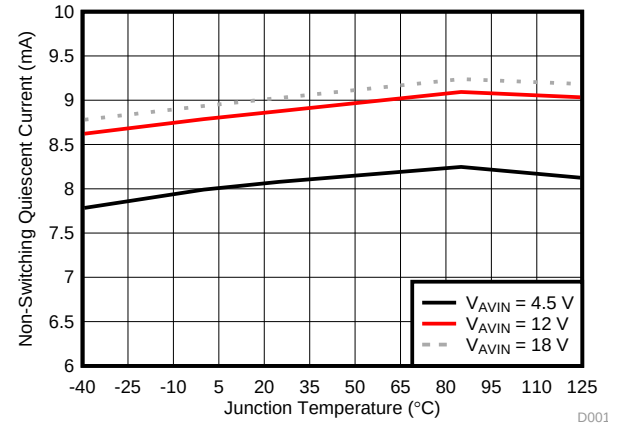

图 9. Non-Switching Input Current (I_{AVIN}) vs Junction Temperature

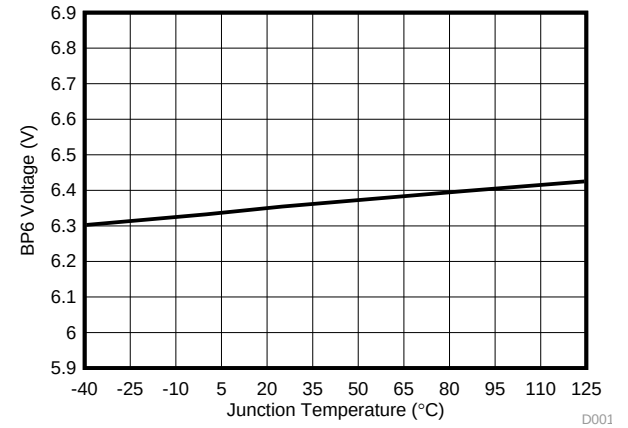

I_{BP6} = 10 mA V_{PVIN} = V_{AVIN}= 12 V

图 10. BP6 Voltage vs Junction Temperature

Typical Characteristics (接下页)

V_{PIN} = V_{AVIN} = 12 V, T_A = 25 ºC, R_{RT} = 40.2 kΩ (unless otherwise specified). Safe operating area curves were measured using a Texas Instruments evaluation module (EVM).

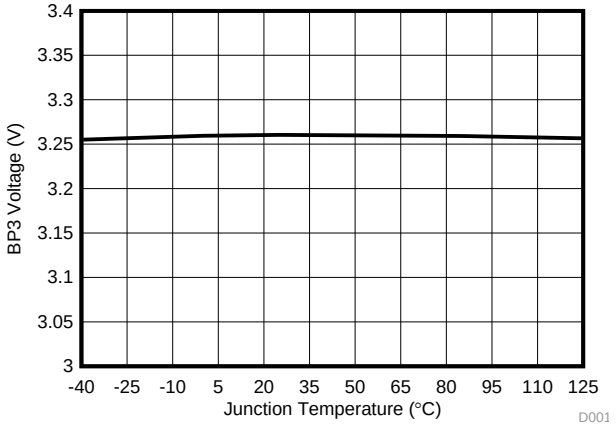

I_{BP3} = 5 mA V_{PVIN} = V_{AVIN}= 12 V

图 11. BP3 Voltage vs Junction Temperature

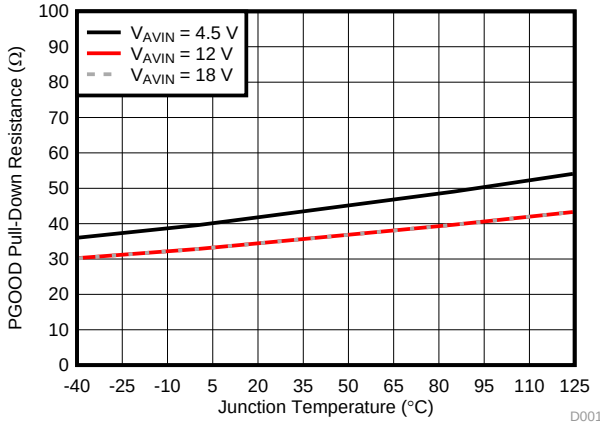

图 12. PGOOD Pulldown Resistance vs Junction Temperature

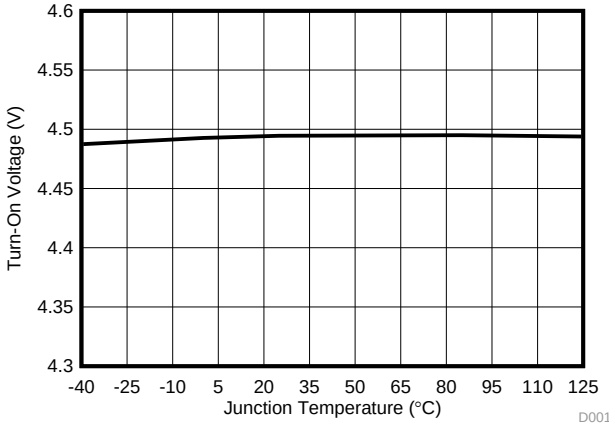

VIN_ON = 4.5 V

图 13. Turnon Voltage vs Junction Temperature

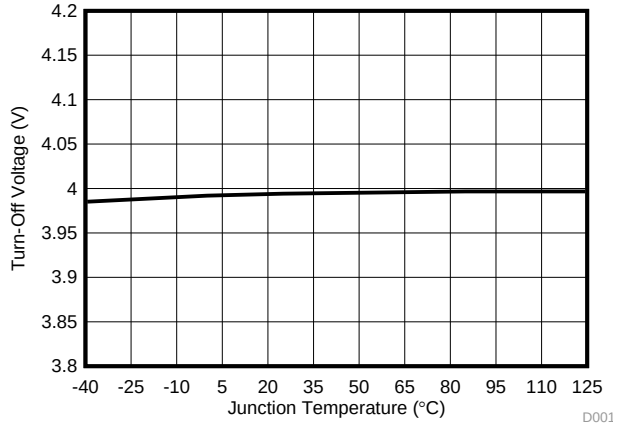

VIN_OFF = 4 V

图 14. Turnoff Voltage vs Junction Temperature

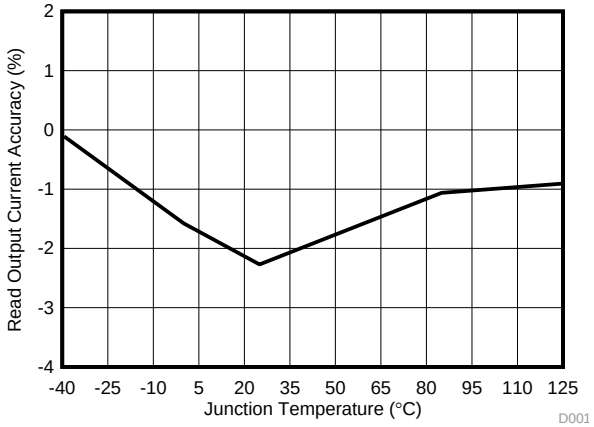

I_{OUT} = 20 A V_{PVIN} = V_{AVIN}= 12 V

图 15. READ_IOUT Accuracy vs Junction Temperature

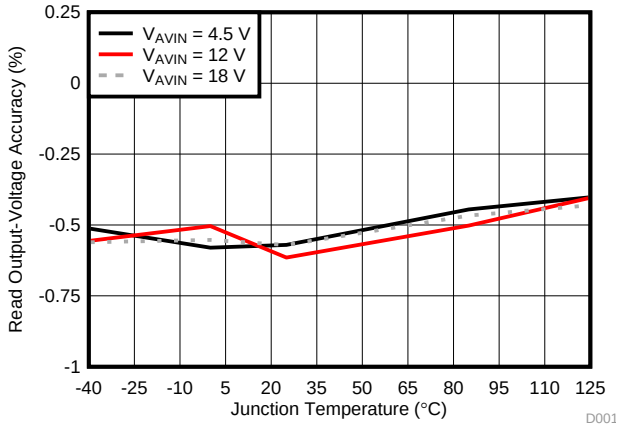

V_{PVIN} = V_{AVIN}= 12 V

图 16. READ_VOUT Accuracy vs Junction Temperature

版权 © 2016, Texas Instruments Incorporated

Typical Characteristics (接下页)

V_{PIN} = V_{AVIN} = 12 V, T_A = 25 ºC, R_{RT} = 40.2 kΩ (unless otherwise specified). Safe operating area curves were measured using a Texas Instruments evaluation module (EVM).

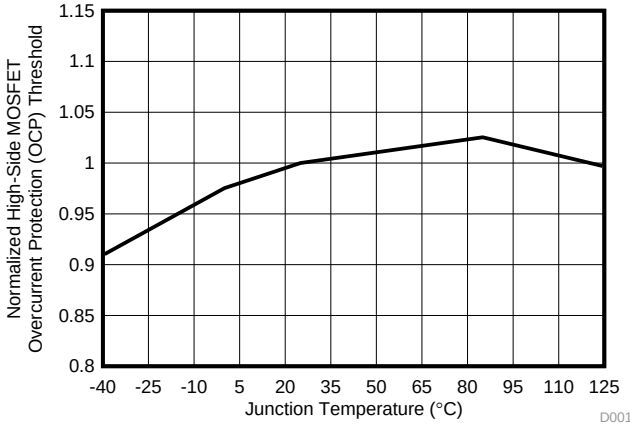

BOOT – SW = 6.5 V V_{PVIN} = V_{AVIN}= 12 V

图 17. High-Side Overcurrent Protection vs Junction Temperature

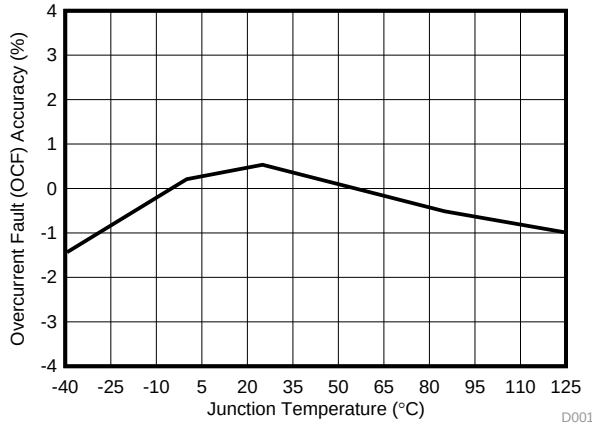

OCF = 20 A V_{PVIN} = V_{AVIN}= 12 V

图 18. Overcurrent Fault Protection (OCF) Accuracy vs Junction Temperature

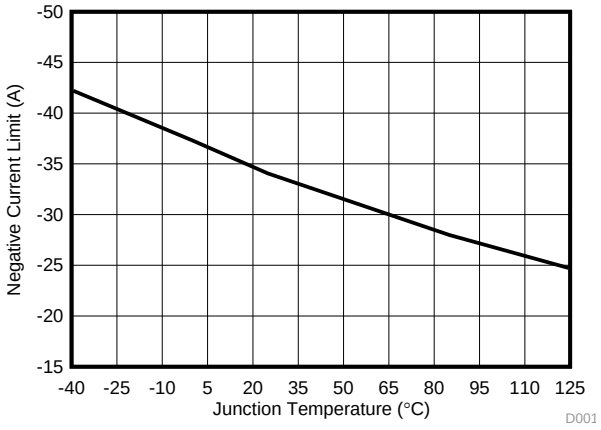

图 19. Negative Overcurrent Limit vs Junction Temperature

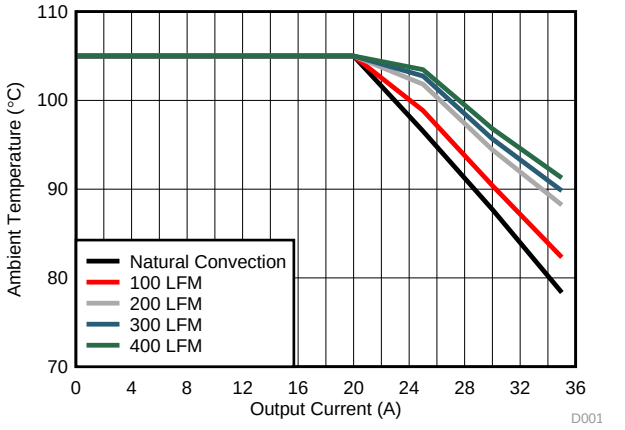

V_{IN} = 5 V V_{OUT} = 1 V f_{SW} = 300 kHz

图 20. Safe Operating Area

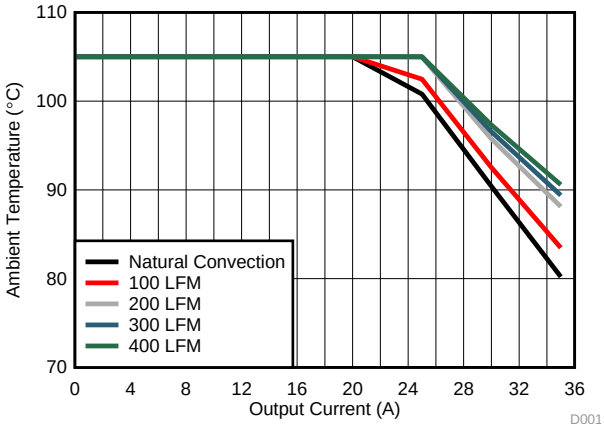

V_{IN} = 12 V V_{OUT} = 1 V f_{SW} = 300 kHz

图 21. Safe Operating Area

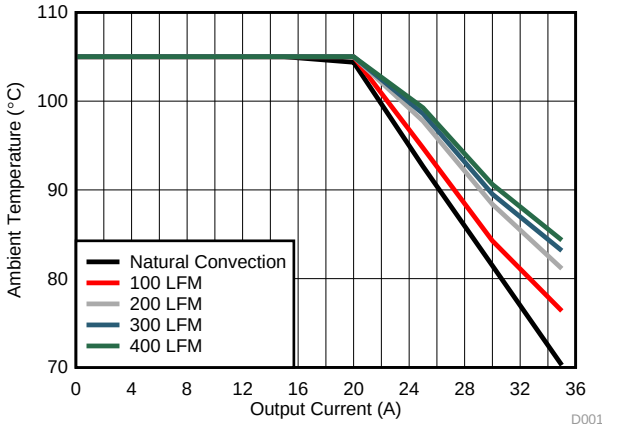

V_{IN} = 12 V V_{OUT} = 1 V f_{SW} = 500 kHz

图 22. Safe Operating Area

7 Detailed Description

7.1 Overview

The devices are PMBus 1.3 compliant 35-A, high-performance, synchronous buck converters with two integrated N-channel NexFET™ power MOSFETs, enabling high-power density and minimal PCB area. These devices implement the industry-standard fixed switching frequency, voltage-mode control with input feed-forward topology that responds instantly to input voltage change. These devices can be synchronized to the external clock to eliminate beat noise and reduce EMI and EMC. Monotonic prebias capability eliminates concerns about damaging sensitive loads. Two devices can be paralleled together to provide up to 70-A load. Current sensing for overcurrent protection, current reporting and current sharing between two devices are implemented by sampling a small portion of the power stage current which provides accurate information independent on the device temperature. The integrated PMBus interface capability provides precise current, voltage, and internal die-temperature monitoring, as well as many user-programmable configuration options including Adaptive Voltage Scaling (AVS) function through standard VOUT_COMMAND on the PMBus.

7.2 Functional Block Diagram

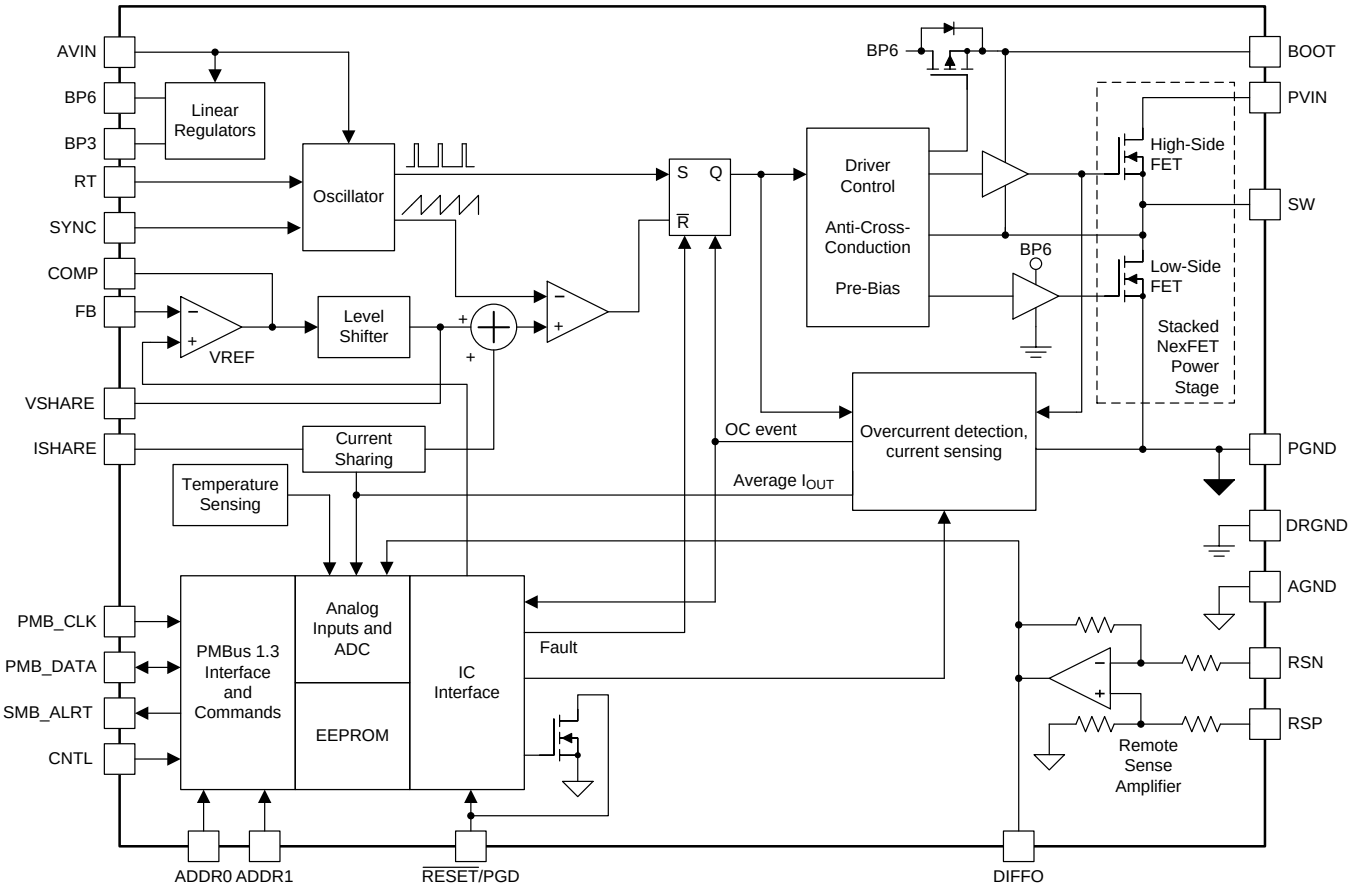

Copyright © 2016, Texas Instruments Incorporated

版权 © 2016, Texas Instruments Incorporated

7.3 Feature Description

7.3.1 2-Phase Application

图 23 shows the setup for a 2-phase application using two devices.

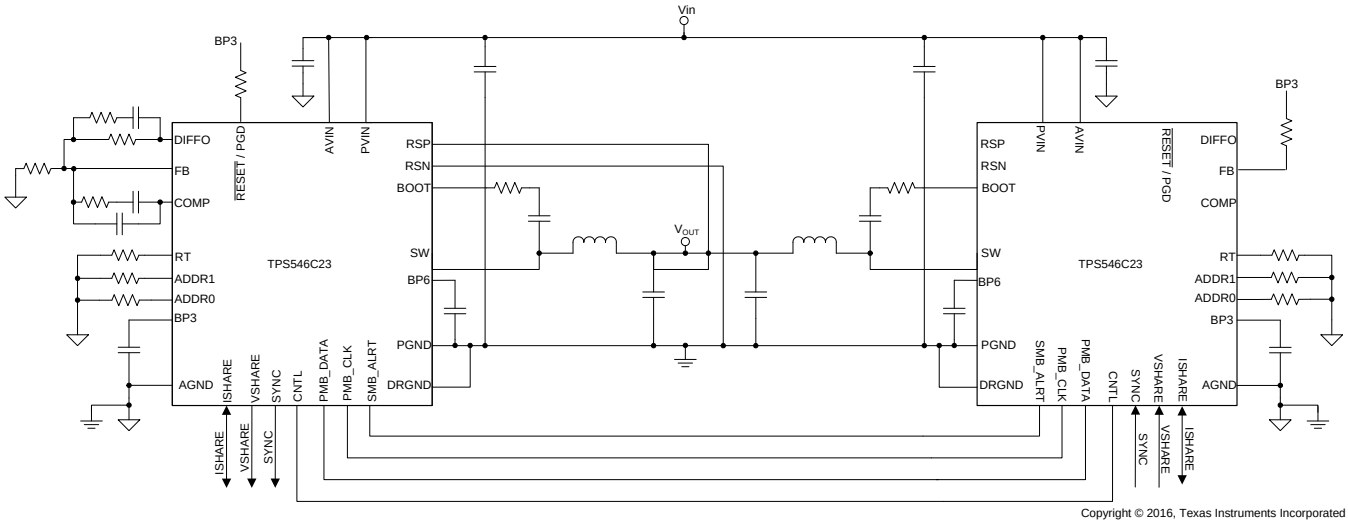

图 23. 2-Phase Application

7.3.2 Linear Regulators BP3 and BP6

The devices have two onboard linear regulators to provide suitable power for the internal circuitry of the device. Bypass the BP3 and BP6 pins externally for the converter to function properly. The BP3 pin requires a minimum of 2.2 µF of capacitance connected to AGND. The BP6 pin requires a minimum 2.2 µF of capacitance connected to PGND. TI recommends using a 4.7-µF capacitor and an additional 100-nF capacitor to reduce the ripple on the BP6 pin.

注

Place bypass capacitors as close as possible to the device pins, with a minimum return loop back to ground and the return loop should be kept away from fast switching voltage and main current path. For more information, see the *Layout* section. Poor bypassing can degrade the performance of the regulator.

The use of the internal regulators to power other circuits is not recommended because the loads placed on the regulators might adversely affect operation of the controller.

7.3.3 Input Undervoltage Lockout (UVLO)

The devices provide flexible user adjustment of the undervoltage lockout (UVLO) threshold and hysteresis. Two PMBus commands, VIN_ON (35h) and VIN_OFF (36h), allow the user to independently set turnon and turnoff thresholds of these input voltages, with a minimum of 4-V turnoff to a maximum 7.75-V turnon. For more information, see 表 4.

7.3.4 Turnon and Turnoff Delay and Sequencing

The devices provide many sequencing options. Using the ON_OFF_CONFIG command, the device can be configured to start up whenever the input voltage is above the UVLO threshold, to require an additional signal on the CNTL pin, to receive an update to the OPERATION command through the PMBus interface, or a combination of these configurations. When the gating signal as specified by the ON_OFF_CONFIG command is asserted, a programmable turnon delay can be set with the TON_DELAY command to delay the start of regulation. Similarly, a programmable turnoff delay can be set with the TOFF_DELAY command to delay the stop of regulation once the gating signal is deasserted. Delay times are specified in milliseconds (ms), from 0 to 100 ms.

Feature Description (接下页)

图 24 shows control of the start-up and shutdown operations of the device when the device is configured to respond to both the CNTL signal and the OPERATION command. The device can also be configured to independently use either the CNTL signal or the OPERATION command, or to convert power when a sufficient input voltage is available.

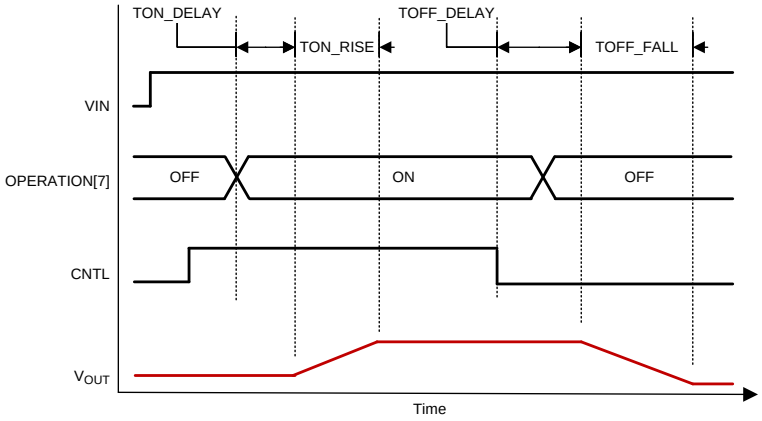

图 24. Turnon Controlled by Both Operation(1) and Control (1)

7.3.5 Voltage Reference

A reference digital-to-analog converter (DAC) with a 350-mV to 1650-mV range and 2^{-9}-V (1.953 mV) resolution connects to the noninverting input of the error amplifier. The tight tolerance on the reference voltage allows the user to design power supply with very-high DC accuracy.

7.3.6 Differential Remote Sense and Compensation

The devices implement a differential remote-sense amplifier to provide excellent load regulation by cancelling IR-drop in high-current applications. The RSP and RSN pins should be kelvin-connected to the output capacitor bank directly at the load, and routed back to the device as a tightly coupled differential pair. Ensure that these traces are isolated from fast switching signals and high current paths on the final PCB layout, as these can add differential-mode noise. Optionally, use a small coupling capacitor (1-nF typical) between the RSP and RSN pins to improve noise immunity. The output of the differential remote sense amplifier (DIFFO) is used for output voltage setting and error amplifier frequency compensation local to the device as shown in 图 25.

The devices use voltage mode control with input feedforward. Frequency compensation can be accomplished using standard Type III techniques as shown in 图 25.

In 2-phase configuration, the FB pin of the loop slave device should be tied to BP3 and the typical application circuit is shown in 图 23. The loop master passes the internal COMP voltage through VSHARE pin to the loop slave device. For more information, see the *Current Sharing* section.

Additionally, the voltage at the DIFFO pin is digitized, averaged to reduce measurement noise and continually stored in the READ_VOUT command, enabling output voltage telemetry.

(1) Bit 7 of OPERATION is used to control power conversion.

版权 © 2016, Texas Instruments Incorporated

Feature Description (接下页)

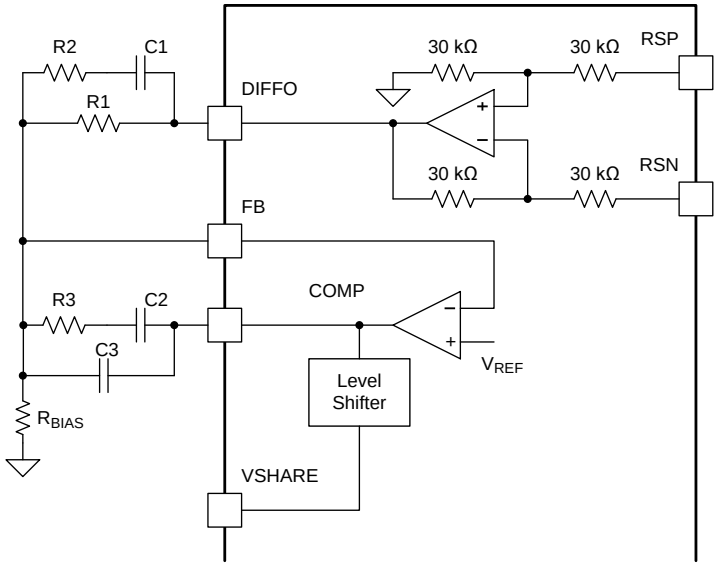

图 25. Output Voltage Setting

7.3.7 Set Output Voltage and Adaptive Voltage Scaling (AVS)

A voltage divider from the DIFFO pin to the FB pin is typically required to set the nominal output voltage like the one formed by R1 and R_{BIAS} resistors shown in 图 25 and the resulted output voltage is shown in 公式 1.

$$V_{OUT} = EA_REF \times (R_{BIAS} + R1) / R_{BIAS} \quad (1)$$

7.3.7.1 VOUT_COMMAND

To allow PMBus devices to map between the nominal commanded voltage and the voltage at the control circuit input FB (V_{OUT} divided down to match the reference voltage EA_REF), the device uses the VOUT_SCALE_LOOP command.

$$VOUT_SCALE_LOOP = R_{BIAS} / (R_{BIAS} + R1) \quad (2)$$

表 1 lists the range of valid VOUT_COMMAND values which are dependent upon the configured VOUT_SCALE_LOOP (29h) command.

表 1. FB Resistor Divider Ratio and VOUT_COMMAND Data Valid Range

VOUT_SCALE_LOOP	RESISTOR DIVIDER R_{BIAS}: R1 (IN 图 25)	OUTPUT VOLTAGE RANGE (V)		VOUT_COMMAND DATA VALID RANGE	
		MIN	MAX	MIN	MAX
1	Unnecessary	0.35	1.65	179	845
0.5	1:1	0.7	3.3	358	1690
0.25	1:3	1.4	5.5	716	2816

If the value programmed to VOUT_COMMAND exceeds the value stored in either VOUT_MIN or VOUT_MAX. In this case, VOUT_COMMAND will be set to the appropriate VOUT_MIN or VOUT_MAX value (which ever was violated). For the specific status bits set in either case, see the command descriptions for the VOUT_MIN (28h) or VOUT_MAX (24h) command.

7.3.7.2 VREF_TRIM

The nominal output voltage of the converter can also be adjusted by changing the feedback voltage, V_{FB}, using the VREF_TRIM command. The adjustment range is from –64 × 1.953 mV to +63 × 1.953 mV from the nominal FB voltage. This command adjusts the final output voltage of the converter to a high degree of accuracy without relying on high-precision feedback resistors. The resolution of the adjustment is approximately 1.953 mV.

版权 © 2016, Texas Instruments Incorporated

7.3.7.3 MARGIN

The devices also allow simple testing of the output-voltage margin, by applying a either a positive or negative offset to the feedback voltage. The STEP_VREF_MARGIN_HIGH (MFR_SPECIFIC_05) (D5h) and STEP_VREF_MARGIN_LOW (MFR_SPECIFIC_06) (D6h) commands control the size of the applied high offset or low offset (respectively). The adjustment range is from –64 × 1.953 mV to 31 × 1.953 mV from the nominal feedback voltage. The OPERATION command toggles the converter between the following three states:

- Margin none (no output margining)
- Margin high
- Margin low

Use 公式 3 to calculate the resulted internal-reference voltage.

$$EA_REF = [(VOUT_COMMAND \times VOUT_SCALE_LOOP) + (VREF_TRIM + STEP_VREF_MARGIN_HIGH \times OPERATION[5] + STEP_VREF_MARGIN_LOW \times OPERATION[4])] \times 1.953\ mV \quad (3)$$

The total adjustable range of the output voltage, including VOUT_COMMAND, MARGIN, and VREF_TRIM, is limited by the internal reference DAC of 0.35 V – 1.65 V . For more information on the implementation, see the *Supported PMBus Commands* section.

注

- The VOUT_SCALE_LOOP is limited to only 3 possible options: 1 (default, no bottom resistor required for the divider), 0.5, and 0.25.
- When VOUT_SCALE_LOOP is set to 1 (default), no bottom R_{BIAS} resistor is required. The reference voltage is equal to the output voltage, which allows tighter system DC accuracy by removing the resistor divider tolerance.
- If the divider ratio, R_{BIAS} / (R_{BIAS} + R1), does not match the programed VOUT_SCALE_LOOP, the user should be aware that the actual output voltage determined by 公式 1 and 公式 3 may not match the programed VOUT_COMMAND.

7.3.8 Reset VOUT

Without power cycling, the VOUT_COMMAND value and the corresponding output voltage can be reset to the default value which is latched when the devices are powered up from AVIN. When the RESET/PGD pin is pulled low, the digital core sets the VOUT_COMMAND value to the default value. 图 26 shows the timing diagram for resetting the output voltage. When theRESET/PGD pin is asserted low, after a short delay (less than 2 µs), the output voltage begins to transition from the current value to the default VOUT_COMMAND value according to the slew-rate set in the VOUT_TRANSITION_RATE command. The VOUT_COMMAND value does not change to any values programmed in the VOUT_COMMAND register while the RESET/PGD pin is held low. The reset_vout status bit in the STATUS_MFR_SPECIFIC (80h) register is set for indication.

In the case of fault restart, the user has access to allow the VOUT_COMMAND value to be reset to the initial boot-up voltage by setting the RST_VOUT_oSD Bit in the OPTIONS (MFR_SPECIFIC_21) (E5h) register.

版权 © 2016, Texas Instruments Incorporated

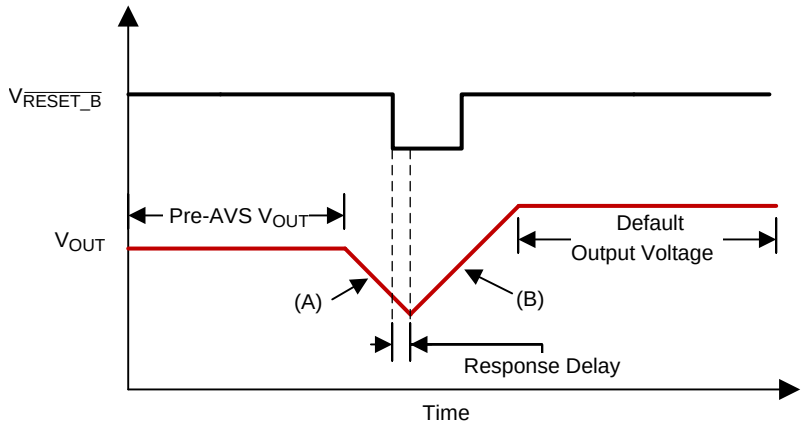

A. VOUT_COMMAND adjustment occurs through the PMBus interface.

B. Reset to the default VOUT_COMMAND value which is latched when the devices are powered up from AVIN. The slew rate is defined by the VOUT_TRANSITION_RATE comand.

图 26. Output Voltage Reset

7.3.9 Switching Frequency and Synchronization

A resistor from the RT pin (R_{RT}) to AGND sets the switching frequency. Use 公式 4 to calculate the R_{RT} resistor value.

$$R_{RT} = \frac{2.01 \times 10^{10}}{f_{SW}} \quad (4)$$

where

- R_{RT} is the timing resistor in Ohms
- f_{SW} is the switching frequency in Hertz

The devices are designed to operate from 200 kHz to 1 MHz.

7.3.9.1 Synchronization

The devices can synchronize to an external clock that is ±20% of the free-running frequency.

7.3.9.1.1 Stand-Alone Device

The device supports auto detection on the SYNC pin of the stand-alone device or the PWM-loop master device in a 2-phase configuration. With the external clock applied to the SYNC pin before AVIN power-up or pulling up the SYNC pin to the BP3 or BP6 pin, the SYNC pin is configured as SYNC-IN, and is synchronized to the rising edge of the external clock applied to this pin, with a minimum pulse width of 200 ns (maximum). If no external clock edges occur or logic-high voltage is applied to the SYNC pin at AVIN power-up, the SYNC pin is configured as SYNC-OUT, and the internal free-running frequency set by the RT resistor is output on the SYNC pin. A sudden change in synchronization clock frequency causes an associated control-loop response, resulting in an overshoot or undershoot on the output voltage.

7.3.9.1.2 Master-Slave Configuration

Without the requirement of an external clock, the SYNC pin of the PWM-loop master device can be configured as SYNC-OUT and output a 50% duty-cycle clock to the slave device. The slave device is then synchronized to the falling edge of the clock applied to the SYNC pin. Both the loop master and slave devices require an RT resistor to set the free-running frequency. 图 27 shows the simplified schematic for this configuration. For the loop slave device in a 2-phase configuration, the SYNC pin is always configured as SYNC-IN, and is synchronized to the falling edge of the incoming clock on the SYNC pin. 图 28 shows the timing for phase interleaving.

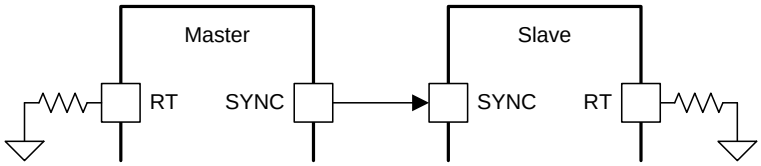

图 27. Master-Slave Synchronization and Phase Interleaving Setting

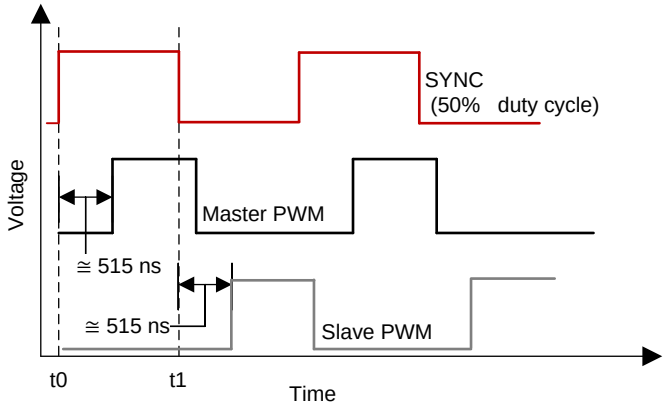

图 28. Phase Interleaving Timing

An external clock can optionally be applied to both the PWM-loop master and the slave device to synchronize the stack. Only 50% duty cycle of the external clock can be applied to the 2-phase stack to realize the interleaving of two phases. The loop master automatically (auto) detects if an external clock is available for synchronisation. One clock master can also sync another stack as shown in 图 29. When the auto detection determines the clock master and clock slave, the configuration cannot change until AVIN power cycling.

The EEPROM setup (FORCE_SYNC_IN Bit and FORCE_SYNC_OUT Bit) overrides auto detection of the SYNC pin. Therefore, if the FORCE_SYNC_OUT Bit is set to 1, the user should not apply the external clock to SYNC pin, which may cause catastrophic damage to the device. The FORCE_SYNC_IN Bit has higher priority than the FORCE_SYNC_OUT Bit. Neither the FORCE_SYNC_IN Bit nor the FORCE_SYNC_OUT Bit are set as a factory-default setting.

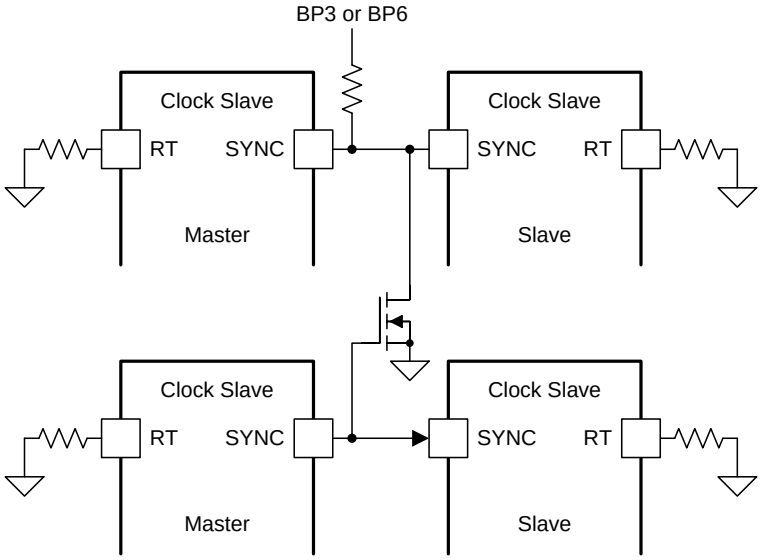

图 29. Phase Interleaving Timing

版权 © 2016, Texas Instruments Incorporated

7.3.9.1.3 SYNC Fault

The converter is allowed to stop switching after detecting the SYNC signal is expected, but not present or has been lost. The device also reports a live (essentially unlatched) sync_flt bit in the STATUS_MFR_SPECIFIC (80h) register. The SMBALERT is not triggered if the SYNC_FAULT bit goes high. The default SYNC fault response is as follows.

- For the case of a clock that is *lost* after it was previously present, the SYNC-loss detection latency is approximately 10 µs. During this delay time (between when the clock is lost to when the controller detects it), the clock slave (loop slave or loop master set as clock slave) continues to operate at a frequency that is approximately 40% less than the free-running frequency. The frequencies of two devices are most likely not identical during this 10-µs duration. The clock master continues to operate at the free-running frequency during the 10-µs duration.
- For the case of a clock signal that is never present, both phases (for 2-phase) or the standalone PWM-loop master (1-phase) remain off (never switch) while waiting for the external clock to arrive.

After the external clock is restored, seven clock cycles are counted and then the rail performs a new soft-start. No further user intervention (for example, power-cycle, CNTL toggle, CLEAR_FAULTS, or others) is required for the rail to start up after clock restoration

注

The SYNC fault response can be disabled by setting the SYNC_FAULT_DIS Bit in the MISC_CONFIG_OPTIONS (MFR_SPECIFIC_32) (F0h) register. The SYNC_FAULT_DIS Bit, when set, disables the sync_flt reporting status, and the devices that lost the SYNC clock input (loop slave or loop master set clock slave) continue to operate at a frequency approximately 40% less than the free-running frequency for approximately 10 µs, then back to the free-running frequency without shutting down. But the frequencies of two devices are most likely not identical because the clock master continues to operate at its own free-running frequency.

7.3.10 Current Sharing

For two devices to operate in a 2-phase application, the SYNC, VSHARE, and ISHARE pins of both devices should be connected respectively, as shown in 图 30. The loop master device shares the same VSHARE voltage. Essentially the internal COMP voltage is shared with the loop slave by connecting the VSHARE pin of each device together. The sensed current in each phase is compared first by connecting the ISHARE pin of each device, then the error current is added into the internal COMP. The resulting voltage is compared with the PWM ramp to generate the PWM pulse. This current sharing loop maintains the current balance between devices.

An additional resistor connected between the ISHARE pins of both devices can be used to lower the current-sharing loop gain for better stability margin. Use to calculate the current sharing gain (G_{ISHARE}).

$$G_{ISHARE} = 19.5 \times 10\ k\Omega / (10\ k\Omega + R_{SHARE})\ mV/A$$

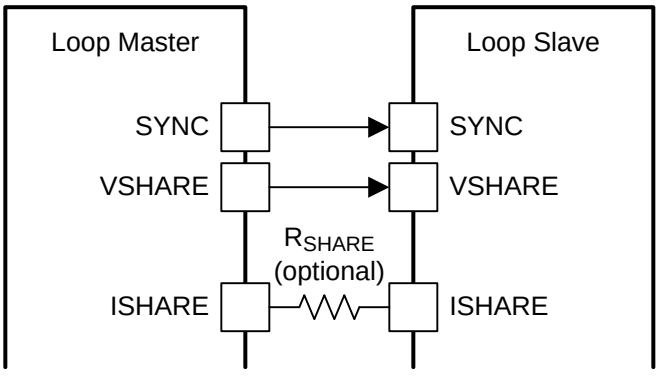

图 30. Current Sharing

In addition to sharing the same internal COMP voltage, the VSHARE pin is also used for fault communication between the loop master and slave devices. The VSHARE pin voltage is pulled low if any device encounters any fault conditions so that the other device sharing VSHARE pin is alerted and stops switching accordingly.

An optional high-frequency capacitor can be added between the VSHARE pin and ground in noisy systems, but the capacitance should not exceed 10 pF.

7.3.11 Soft-Start Time and TON_RISE Command

To control the inrush current required to charge the output capacitor bank during start up, the devices implement a soft-start time. When the device is enabled, the feedback reference voltage, V_{REF}, ramps from 0 V to the final level defined by 公式 3 at a slew rate defined by the TON_RISE command. The specified rise times are defined by the slew rate required to ramp the reference voltage from 0 V to the final value at each given rise time.

The actual rise time of the converter output is slightly less than the rise time defined by the TON_RISE command. This difference occurs because switching does not occur until the error-amplifier output reaches the valley of the PWM ramp. During the soft-start time, the error-amplifier output voltage starts at 0 V and then begins switching again only when the VSHARE voltage reaches the valley of the PWM ramp which is 1.23 V (typical). When the VSHARE voltage reaches the valley of the PWM ramp, the converter output voltage rises quickly until the feedback voltage, V_{FB}, reaches the V_{REF} level, at which point they track through the end of the soft-start period.

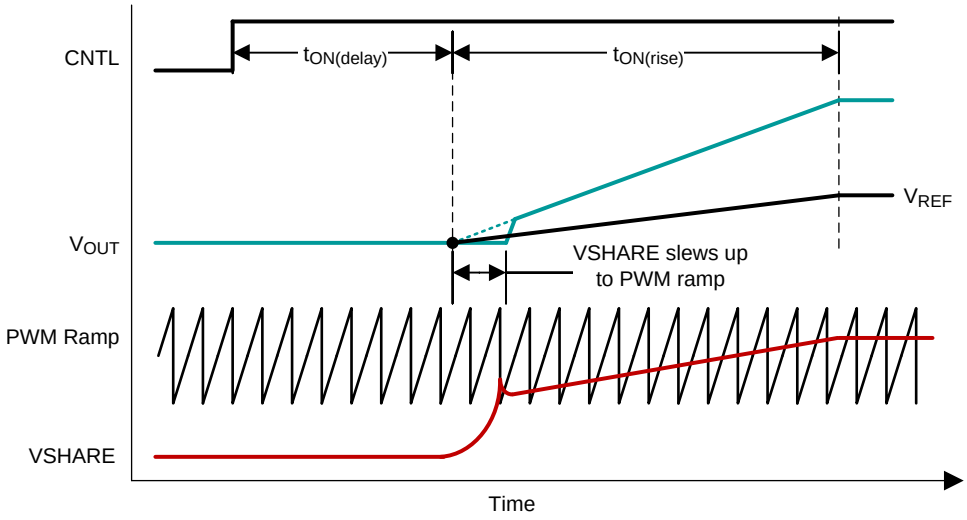

图 31. Soft-Start Timing

The devices support several soft-start times from 1 ms to 100 ms which are selected by the TON_RISE command.

7.3.12 Prebiased Output Start-Up

The devices prevent current from being discharged from the output during start-up, when a prebiased output condition exists. If the output is prebiased, no SW pulses occur until the internal soft-start voltage rises above the error-amplifier input voltage (FB pin). As soon as the soft-start voltage exceeds the error-amplifier input, and SW pulses start and the device limits synchronous rectification after each SW pulse with a narrow on-time. The on-time of the low-side MOSFET slowly increases on a cycle-by-cycle basis until 128 pulses have been generated and the synchronous rectifier runs fully complementary to the high-side MOSFET. This approach prevents the sinking of current from a prebiased output, and ensures the output-voltage start-up and ramp-to-regulation sequences are smooth and monotonic.

For prebias that is higher than regulation, the PWM-loop master device is forced to go through the 128 cycles of prebias operation at the end of TON_RISE time.

The output overvoltage warn is tripped when the FB pin is prebiased to higher than 5% about the regulation level. These devices respond to a prebiased output overvoltage condition immediately upon AVIN powered up and when the BP6 regulator voltage is above the BP6 UVLO of 3.73 V (typical).

版权 © 2016, Texas Instruments Incorporated

7.3.13 Soft-Stop time and TOFF_FALL Command

The devices implement the TOFF_FALL command to define the time for the output voltage to drop from regulation to 0 as shown in 图 24. Negative current in the devices can occur during the TOFF_FALL time to discharge the output voltage. The setting of the TOFF_FALL command to 0 ms causes the unit to bring the output voltage down to 0 as quickly as possible, which results in an effective TOFF_FALL time of 1 ms (fastest time supported). This feature can be disabled in the ON_OFF_CONFIG command for the turnoff controlled by the CNTL pin or bit 6 of the OPERATION register if the regulator is turned off by the OPERATION command. If the regulator is turned off by the OPERATION command, both the high-side and low-side FET drivers are turned off immediately and the output voltage is discharged by the load.

7.3.14 Output Current Telemetry and Low-Side MOSFET Overcurrent Protection

7.3.14.1 Output Current Telemetry

The devices sense the average output current using an internal sense FET as shown in 图 32. A sense FET conducts a scaled-down version of the power-stage current. Sampling this current in the middle of the low-side drive signal determines the average output current. This architecture achieves excellent current monitoring and better overcurrent threshold accuracy than the current sensing of a DC-resistance (DCR) inductor with minimal temperature variation and no dependence on power loss in a higher DCR inductor. Use the IOUT_CAL_OFFSET command to improve current sensing and overcurrent accuracy by removing systematic errors related to board layout after assembly. The devices continually digitize the sensed output current, and average it to reduce measurement noise. The devices then store the current value in the read-only register, READ_IOUT, which enables output-current telemetry.

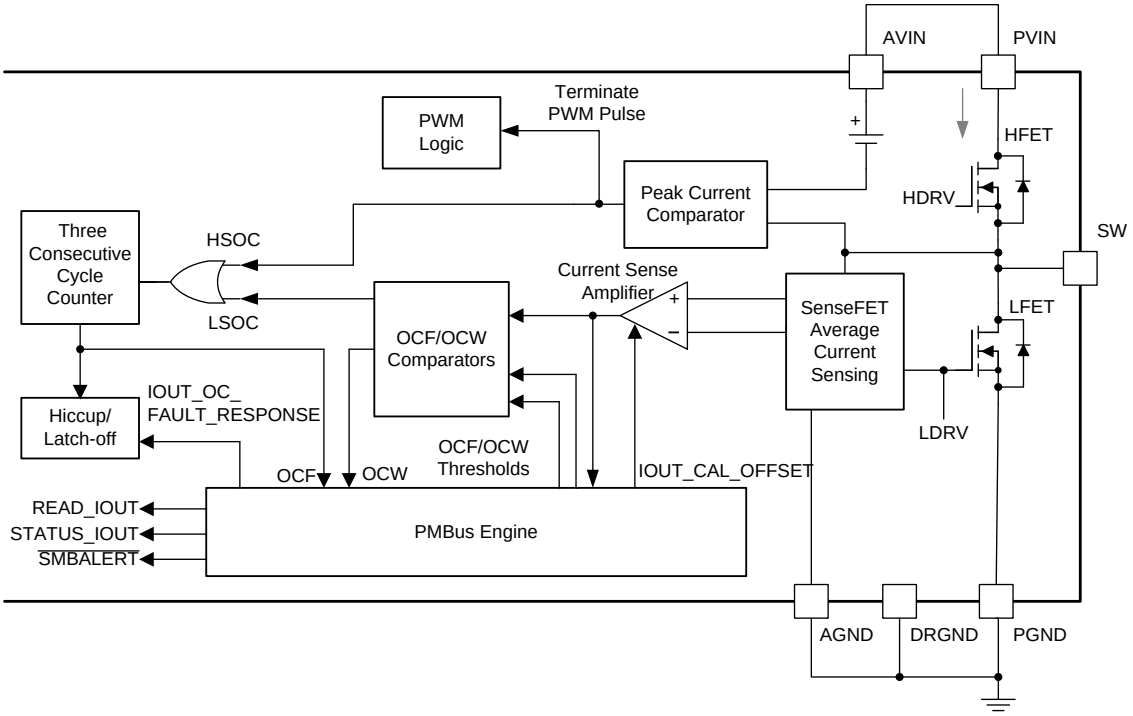

图 32. SenseFET Average Current Sensing and Overcurrent Protection

7.3.14.2 Low-Side MOSFET Overcurrent Protection

The devices implement low-side MOSFET overcurrent protection with programmable fault and warning thresholds. The IOUT_OC_FAULT_LIMIT and IOUT_OC_WARN_LIMIT commands set the low-side overcurrent thresholds.

If an overcurrent event is detected in a given switching cycle, the device increments an overcurrent counter as shown in 图 32. When the device detects three consecutive overcurrent events (either high-side or low-side), the converter responds by flagging the appropriate status registers, triggering the SMBALERT signal if it is not masked, and entering either continuous-restart-hiccup mode or latches off according to the IOUT_OC_FAULT_RESPONSE command. In continuous-restart-hiccup mode, the devices implement a seven TON_RISE time, followed by a normal soft-start attempt. When the overcurrent fault clears, normal operation resumes, otherwise, the device detects overcurrent and the process repeats. The IOUT_OC_FAULT_RESPONSE command can also be set to ignore the OC fault for debugging purposes. 表 2 summarizes the fault-response scheme.

7.3.14.3 Negative Overcurrent Protection

The devices also implement low-side MOSFET Rds,on based negative overcurrent protection. After detecting negative current (sinking from SW to PGND) beyond the negative OC limit, the low-side MOSFET gate drive will be turned off immediately. The low-side gate drive signal will always be turned on for the duration of the minimum off-time in Specifications to re-detect negative OC condition. If negative OC condition persists, the next low-side gate drive pulse will be skipped, except at the end of the clock period, where the low-side gate drive still being turned on for the minimum off-time. This is a cycle-by-cycle clamp. Set the DIS_NEGILIM bit in OPTIONS (MFR_SPECIFIC_21) can disable negative OC protection. The output Overvoltge proteciton has higher priority than negative OC protection, in other words, in case of output Overvoltage condition persists, the low-side FET will be turned on with the negative OC protection being ignored in order to discharge the output voltage and protect the load equipment.

7.3.15 High-Side MOSFET Short-Circuit Protection

The devices also implement a fixed high-side MOSFET overcurrent (HSOC) protection to limit peak current, and prevent inductor saturation in the event of a short circuit. The devices detect an overcurrent event by sensing the voltage drop across the high-side MOSFET when it is on. If the peak current reaches the I_{HOSC} level on any given cycle, the cycle terminates to prevent the current from increasing any further. High-side MOSFET overcurrent events are counted using the method shown in 图 32. If the devices detect three consecutive overcurrent events (high-side or low-side), the converter responds by flagging the appropriate status registers, triggering the SMBALERT signal if it is not masked, and entering either continuous-restart-hiccup mode or latches off according to the IOUT_OC_FAULT_RESPONSE command. For accurate overcurrent protection for the high-side MOSFET, the PVIN and AVIN pins must have the same potential because split-rail operation is not supported. The IOUT_OC_FAULT_RESPONSE command can also be set to ignore the OC fault for debugging purposes. When the IOUT_OC_FAULT_RESPONSE command is set to ignore, the device continues to have cycle-by-cycle HSOC protection. 表 2 summarizes the fault-response scheme.

7.3.16 Die Temperature Telemetry and Overtemperature Protection

An internal temperature sensor based off the bandgap reference protects the devices from thermal runaway. The internal thermal shutdown threshold, T_{SD}, is fixed at 145°C (typical). When the devices sense a temperature above T_{SD}, an otf_bg bit in the STATUS_MFR_SPECIFIC command is flagged, and power conversion stops until the sensed junction temperature decreases by the amount of the thermal shutdown hysteresis, T_{HYST} (20°C typical). The SMBALERT signal is triggered if it is not masked.

The devices also provide temperature telemetry and programmable internal overtemperature fault or warning thresholds using measurements from an internal temperature sensor as shown in 图 33. The temperature-sensor circuit applies two bias currents to an internal diode-connected NPN transistor, and measures ΔV_{BE} to infer the junction temperature of the sensor. The devices then digitize the result and compare it to the user-configured overtemperature fault and warning thresholds. When an internal overtemperature fault (OTF) is detected, power conversion stops until the sensed temperature decreases by 20°C. The READ_TEMPERATURE_1 (8Dh) register is continually updated with the digitized temperature measurement, enabling temperature telemetry. The OT_FAULT_LIMIT (4Fh) and OT_WARN_LIMIT (51h) commands set the overtemperature fault and warning thresholds through the PMBus interface. When an overtemperature event is detected, the device sets the appropriate flags in STATUS_TEMPERATURE (7Dh) command and triggers the SMBALERT signal if it is not masked.

The device response upon internal overtemperature fault can be set to Latch-off, Restart and Ignore in OT_FAULT_RESPONSE. The default response to an over temperature fault is to ignore. Fixed band gap-detected overtemperature (OT) faults are never ignored. The band gap OT faults always respond in a shutdown and attempted restart once the part cools. 表 2 summarizes the fault-response scheme.

版权 © 2016, Texas Instruments Incorporated

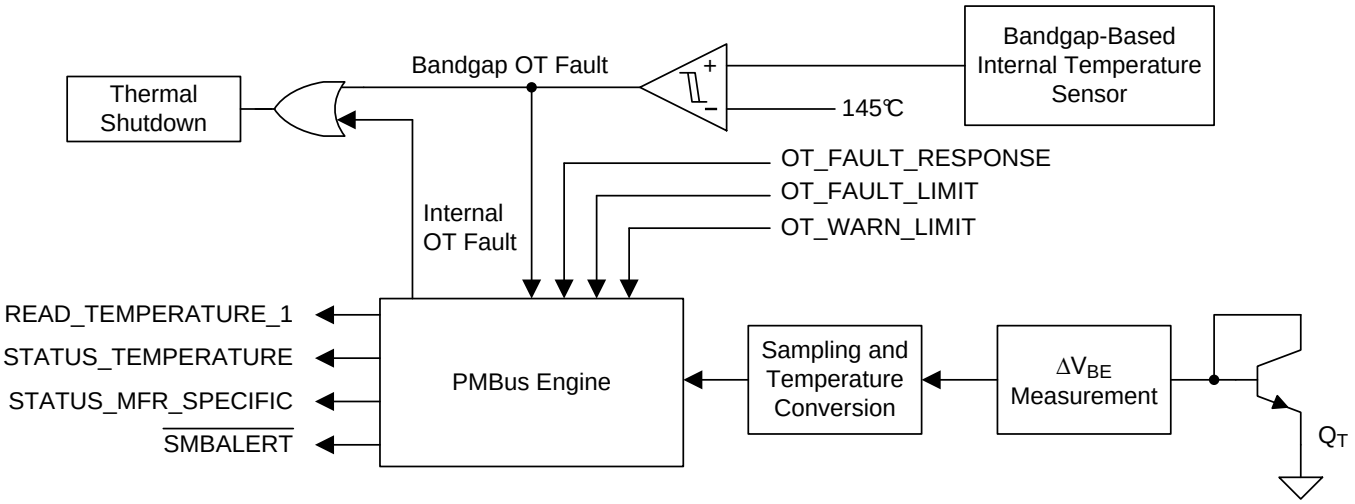

图 33. Overtemperature Protection

7.3.17 Output Voltage Telemetry and Over-/Under-voltage Protection

7.3.17.1 Output Voltage Telemetry

The output voltage is sensed at the remote sense amplifier output pin, and the device continually digitizes the sensed output voltage, and average it to reduce measurement noise. The devices then store the current value in the read-only register, READ_VOUT, which enables output voltage telemetry. Please refer to OPTIONS (MFR_SPECIFIC_21) for details of programming output voltage telemetry signal range, averaging and update rate.

7.3.17.2 Output Overvoltage and Undervoltage Protection

The devices include both output overvoltage protection and output undervoltage protection capability by comparing the FB pin voltage to internal selectable pre-set voltages, as defined by the PCT_OV_UV_WRN_FLT_LIMITS (MFR_SPECIFIC_07) (D7h) command.

If the FB pin voltage rises above the output overvoltage protection threshold, the device terminates normal switching and turns on the low-side MOSFET to discharge the output capacitor and prevent further increases in the output voltage. The device also declares an OV fault, flagging the appropriate status registers, triggering SMBALERT if it is not masked. Then the device enters continuous-restart-hiccup mode or latches off according to the VOUT_OV_FAULT_RESPONSE command. The devices respond to the output Overvoltage condition immediately upon AVIN powered up and BP6 regulator voltage above its own UVLO of 3.73 V (typical). The VOUT_OV_FAULT_RESPONSE can also be set to ignore the output overvotlage fault and continue without interruption. Under this configuration, the control loop continues to respond and adjust PWM duty cycle to keep output voltage within regulation.

If the FB pin voltage falls below the Undervoltage protection level after soft-start has completed, the device terminates normal switching and forces both the high-side and low-side MOSFETs off, and awaits an external reset or begins a hiccup time-out delay prior to restart, depending on the value of the VOUT_UV_FAULT_RESPONSE command. The device also declares a UV fault by flagging the appropriate status registers and triggering SMBALERT if it is not masked. The VOUT_UV_FAULT_RESPONSE can also be set to ignore the output undervoltage fault and continue without interruption for debug purpose.

The devices also provide FB referred fixed threshold (2.2 V typical) output overvoltage protection.

表 2 summarizes the fault-response scheme.

7.3.18 TON_MAX Fault

The TON_MAX_FAULT_LIMIT command sets an upper limit, in milliseconds, on how long the unit can attempt to power up the output without reaching the output undervoltage fault limit. The devices differentiate a startup UV fault and a regulation UV fault by implementing the TON_MAX_FAULT_LIMIT command. The TON_MAX_FAULT_LIMIT command can allow the devices more time than the soft-start time defined by TON_RISE to come into regulation and the UV detection is essentially delayed up to the TON_MAX_FAULT_LIMIT time. For more details, see the *TON_MAX_FAULT_LIMIT (62h)* section.

7.3.19 Power Good (PGOOD) Indicator

When the output voltage remains within the PGOOD window after the start-up period, PGOOD as an open-drain output is released, and rises to an externally supplied logic level. The PGOOD window is defined by OV warning limit and UV warning limit in PCT_OV_UV_WRN_FLT_LIMITS (MFR_SPECIFIC_07) (D7h), which can be programmed through the PMBus interface, as shown in 图 34. The PGOOD pin pulls low upon any fault condition on default. Please refer to 表 2 for the possible sources to pull down the PGOOD pin.

The PGOOD signal can be connected to the CNTL pin of another device to provide additional controlled turnon and turnoff sequencing.

The OVW or PGOOD signal trips when the FB pin is prebiased to higher than 5% about the regulation level. This level of prebias is unusual and it is beneficial to flag a warning in this situation.

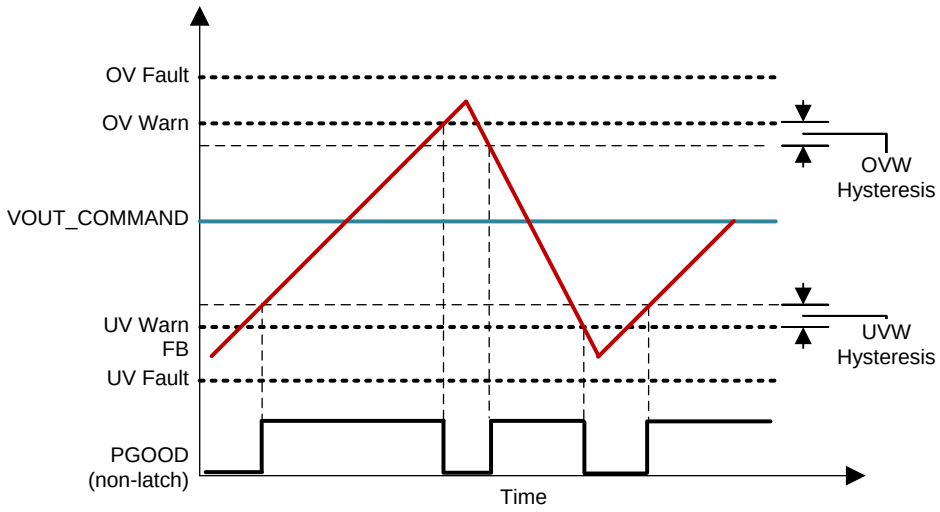

图 34. PGOOD Threshold and Hysteresis

注

Pulling PGOOD pin high before the devices gets input power could cause PGOOD pin going high due to the limited pulldown capability in un-powered condition. If this is not desired, increase the pullup resistance or reduce the external pullup supply voltage.

版权 © 2016, Texas Instruments Incorporated

7.3.20 Fault Protection Responses

表 2 summarizes the various fault protections and associated responses.

表 2. Fault Protection Summary

FAULT or WARN	PROGRAMMING	FAULT RESPONSE SETTING	FET BEHAVIOR	ACTIVE DURING TON_RISE	SOURCE OF SMBALERT	SMBALERT MASKABLE	PGOOD
Internal Over Temp Fault	OT_FAULT_LIMIT (4Fh)	Latch-off	Both FETs off	Yes	Yes	Yes	Low
		Restart	Both FETs off, then restart after cooling down(1)				Low
		Ignore	FETs still controlled by PWM				High
Internal Over Temp Warn	OT_WARN_LIMIT (51h)	Latch-off or Restart on Fault	PWM maintains control of FETs	Yes	Yes	Yes	Low
		Ignore Fault					High
Bandgap Over Temp Fault	Threshold fixed internally	Latch-off	Both FETs off	Yes	Yes	Yes	Low
		Restart	Both FETs off, then restart after cooling down(1)				
		Ignore	Both FETs off, then restart after cooling down(2)				
Low-Side OC Fault	IOUT_OC_FAULT_LIMIT (46h)	Latch-off	3 PWM counts, then both FETs off	Yes	Yes	Yes	Low
		Restart	3 PWM counts, then both FETs off, restart after 7×TON_RISE				Low
		Ignore	FETs still controlled by PWM				High
Low-Side OC Warn	IOUT_OC_WARN_LIMIT	Latch-off or Restart on Fault	PWM maintains control of FETs	Yes	Yes	Yes	Low
		Ignore Fault					High
High-Side OC Fault		Latch-off	3 PWM counts, then both FETs off	Yes	Yes	Yes	Low
		Restart	3 PWM counts, then both FETs off, restart after 7 × TON_RISE				Low
		Ignore	Cycle-by-cycle peak current limit				High
V_{OUT} OV Fault	PCT_OV_UV_WRN_FLT_LIMITS (MFR_SPECIFIC_07) (D7h)	Latch-off	High-side FET OFF, low-side FET response configured byOV_RESP_SEL Bit: latch ON or turn on till FB drops below 0.2 V	Yes	Yes	Yes	Low
		Restart	High-side FET OFF, low-side FET response configured byOV_RESP_SEL Bit: latch ON or turn on till FB drops below 0.2 V. Then restart after 7 × TON_RISE				
		Ignore	PWM maintains control of FETs				
V_{OUT} OV Warn	PCT_OV_UV_WRN_FLT_LIMITS (MFR_SPECIFIC_07) (D7h)	Latch-off or Restart on Fault	PWM maintains control of FETs	Yes	Yes	Yes	Low
		Ignore Fault					
V_{OUT} UV Fault	PCT_OV_UV_WRN_FLT_LIMITS (MFR_SPECIFIC_07) (D7h)	Latch-off	Both FETs off	No	Yes	Yes	Low
		Restart	Both FETs off, then restart after 7×TON_RISE				
		Ignore	PWM maintains control of FETs				

(1) When the overtemperature fault is tripped, the device shuts off both FETs and restarts until the sensed temperature decreases 20°C from the tripping threshold.
(2) The bandgap overtemperature Fault cannot be ignored, the device shuts off both FETs and restarts after the internal die temperature drops below the threshold.

版权 © 2016, Texas Instruments Incorporated

表 2. Fault Protection Summary (接下页)

FAULT or WARN	PROGRAMMING	FAULT RESPONSE SETTING	FET BEHAVIOR	ACTIVE DURING TON_RISE	SOURCE OF SMBALERT	SMBALERT MASKABLE	PGOOD
V_{OUT} UV Warn	PCT_OV_UV_WRN_FLT_LIMITS (MFR_SPECIFIC_07) (D7h)	Latch-off or Restart on Fault	PWM maintains control of FETs	No	Yes	Yes	Low
		Ignore Fault					
T_{ON} Max Fault	TON_MAX_FAULT_LIMIT	Latch-off	Both FETs off	No	Yes	Yes	Low
		Restart	Both FETs off, then restart after 7×TON_RISE				
		Ignore	PWM maintains control of FETs				
VIN UVLO	VIN_ON, VIN_OFF	Shut down	Both FETs off	Yes	Yes	Yes	Low

版权 © 2016, Texas Instruments Incorporated

注

The best practice is to have the fault response of the loop master and slave device set as the same to avoid unexpected behavior.

7.3.21 Switching Node

The SW pin connects to the switching node of the power-conversion stage and acts as the return path for the high-side gate driver. When configured as a synchronous buck stage, the voltage swing on SW normally traverses from below ground to well above the input voltage. Parasitic inductance in the high-side FET and the output capacitance (C_{OSS}) of both power FETs form a resonant circuit that can produce high frequency (> 100 MHz) ringing on this node. The voltage peak of this ringing, if not controlled, can be significantly higher than the input voltage. Ensure that the peak ringing amplitude does not exceed the absolute maximum rating limit for the pin.

In many cases, a series resistor and capacitor snubber network connected from the switching node to PGND can be helpful in damping the ringing and decreasing the peak amplitude. Provide provisions for snubber network components in the layout of the printed circuit board. If testing reveals that the ringing amplitude at the SW pin exceeds the limit, then include snubber components. For more information about snubber circuits design, refer to *Snubber Circuits: Theory, Design and Application* (SLUP100).

Placing a BOOT resistor in series with the BOOT capacitor slows down the turnon of the high-side FET and can help to reduce the peak ringing at the switching node as well.

7.3.22 PMBus General Description

Timing and electrical characteristics of the PMBus interface specification can be found in the *PMB Power Management Protocol Specification, Part 1, revision 1.3* available at http://pmbus.org. The devices support both the 100-kHz and 400-kHz bus timing requirements. The devices do not stretch pulses when communicating with the master device.

Communication over the PMBus interface can support the Packet Error Checking (PEC) scheme if desired. If the master supplies clock (CLK pin) pulses for the PEC byte, PEC is used. If the CLK pulses are not present before a STOP, the PEC is not used.

The devices support a subset of the commands in the PMBus 1.3 Power Management Protocol Specification. See Supported PMBus Commands for more information

The devices also support the SMBALERT response protocol. The SMBALERT response protocol is a mechanism by which a slave device (such as the devices) can alert the bus master that it is available for communication. The master processes this event and simultaneously accesses all slaves on the bus (that support the protocol) through the alert response address (ARA). Only the slave that caused the alert acknowledges this request. The host performs a modified receive byte operation to ascertain the slave address. At this point, the master can use the PMBus status commands to query the slave that caused the alert. By default these devices implement the *auto alert response*, a manufacturer specific improvement to the SMBALERT response protocol, intended to mitigate the issue of *bus hogging*. For more information, see the *Auto ARA Response* section. For more information on the SMBus alert response protocol, refer to the System Management Bus (SMBus) specification.

The devices contain nonvolatile memory that stores configuration settings and scale factors. However, the device does not save the settings programmed into this nonvolatile memory. The STORE_DEFAULT_ALL (11h) or STORE_USER_ALL (11h) command must be used to commit the current settings to nonvolatile memory as device defaults. The settings that are capable of being stored in nonvolatile memory are noted in the detailed command descriptions.

7.3.23 PMBus Address

The PMBus specification requires that each device connected to the PMBus have a unique address on the bus. The devices each have 64 possible addresses (0 through 63 in decimal) that can be assigned by connecting resistors from the ADDR0 and ADDR1 pins to AGND. The address is set in the form of two octal (0 to 7) digits, one digit for each pin. ADDR1 is the high order digit and ADDR0 is the low-order digit. These address selection resistors must be 1% tolerance or better. Using resistors other than the recommended values can result in devices responding to adjacent addresses.

The E48 series resistors with no worse than 1% tolerance suggested for each digit value are shown in 表 3.

版权 © 2016, Texas Instruments Incorporated

表 3. Required Address Resistors

DIGIT	RESISTOR VALUE (kΩ)
0	7.15
1	14
2	22.6
3	34.8
4	51.1
5	78.7
6	121
7	187

The devices also detect values that are out of range on the ADDR0 and ADDR1 pins. If the device detects that either pin has an out-of-range resistance connected to it, the device continues to respond to PMBus interface commands, but does so at address 127 decimal, which is outside of the possible programmed addresses. It is possible but not recommended to use the device in this condition, especially if other devices are present on the bus or if another device could possibly occupy the 127 decimal address.

Certain addresses in the I^2C address space are reserved for special functions and it is possible to set the address of the devices to respond to these addresses. The user is responsible for knowing which of these reserved addresses are in use in a system and for setting the address of the devices accordingly so as not to interfere with other system operations. The devices can be set to respond to the global call address or 0. It is recommended not to set the devices to this address unless the user is certain that no other devices respond to this address and that the overall bus is not affected by having such an address present.

7.3.24 PMBus Connections

The devices support both the 100-kHz and 400-kHz bus speeds, 1.8-V or 3.3-V and 5-V PMBus-interface logic level. For more information, see the *PMBus Interface* section of the *Specifications*.

7.3.25 Auto ARA (Alert Response Address) Response

By default, the devices implement the *auto alert response*, a manufacturer specific improvement to the standard SMBALERT response protocol defined in the SMBus specification. The auto alert response is designed to prevent SMBALERT monopolizing in the case of a persistent fault condition on the bus. The user can choose to disable the auto ARA response, and use the standard SMBALERT response as defined in the SMBus specification, by using the EN_AUTO_ARA Bit of the OPTIONS (MFR_SPECIFIC_21) register.

In the case of a fault condition, the slave device experiencing the fault pulls down the shared SMBALERT line, to alert the host that a fault condition has occurred. To establish which slave device has experienced the fault, the host issues a modified receive byte operation to the alert response address (ARA), to which only the slave pulling down on SMBALERT should respond. The SMBus protocol provides a method for address arbitration in the case that multiple slaves on the same bus are experiencing fault conditions. When the host has established the address of the offending device, it must take any necessary action to release the SMBALERT line. For more information on the standard SMBus alert response protocol, refer to the SMBus specification.

In the case of a non-persistent fault (a single-time event, such as an invalid command or data byte), the host can ascertain the address of the slave experiencing a fault using the standard ARA response, and simply issue CLEAR_FAULTS to release the SMBALERT line, and resume normal operation. However, in the case of a persistent fault (one which remains active for some time, such as a short-circuit, or thermal shutdown), once the device issues a CLEAR_FAULTS command, the fault immediately re-triggers, and SMBALERT continues to be pulled low. In this case, the device holds low the SMBALERT line until the host masks the SMBALERT line using SMBALERT_MASK and then issues the CLEAR_FAULTS command. Because the SMBALERT line remains low, the host cannot be alerted to other fault conditions on the bus until it clears SMBALERT. 图 35 and 图 36 show this response.

版权 © 2016, Texas Instruments Incorporated

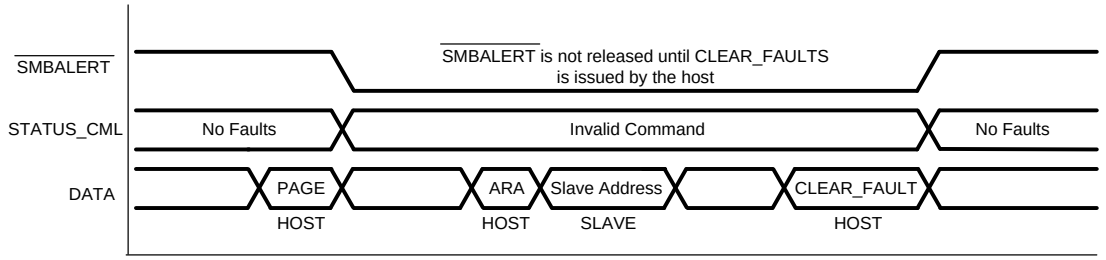

图 35. Example Standard ARA Response to Nonpersistent Fault

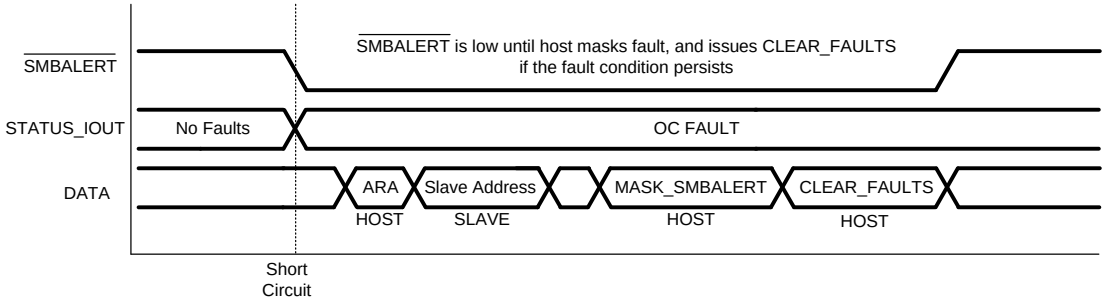

图 36. Example Standard ARA Response to a Persistent Fault

To mitigate the problem of SMBALERT *bus hogging* described previously, the devices implement the Auto ARA response. When Auto ARA is enabled, the devices releases SMBALERT automatically after successfully responding to access from the host at the alert response address. In this case, even when the device is experiencing a persistent fault, it does not hold the SMBALERT line low following successful notification of the host, and the host can be alerted to other faults on the bus in the normal manner. Examples of the auto ARA response are shown in 图 37 and 图 38.

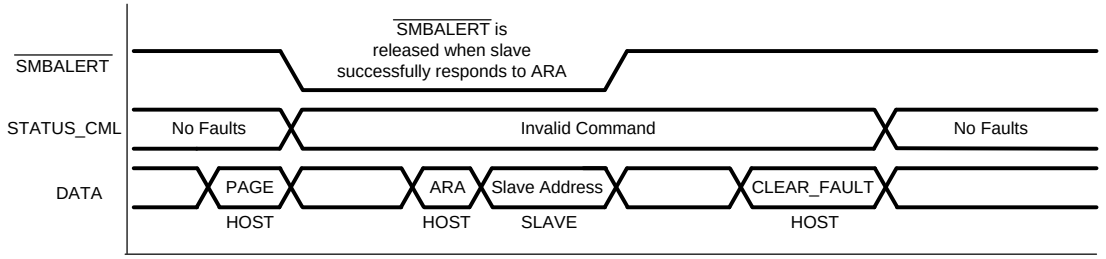

图 37. Example Auto ARA Response to Nonpersistent Fault

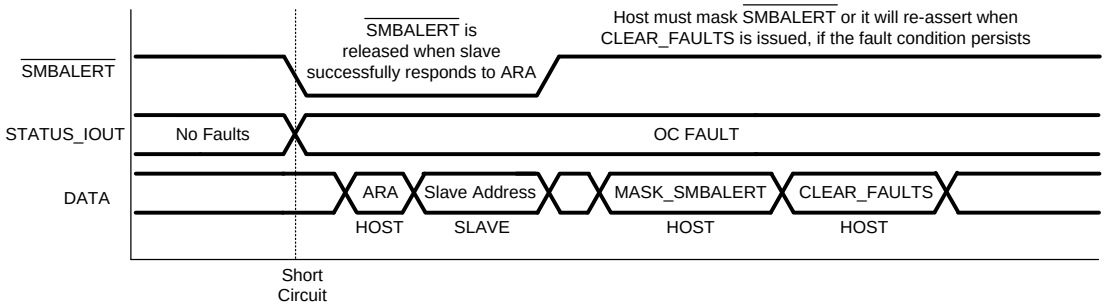

图 38. Example Auto ARA Response to Persistent Fault

7.4 Device Functional Modes

7.4.1 Continuous Conduction Mode

The devices operate in continuous conduction mode (CCM) at a fixed frequency, regardless of the output current. For the first 128 switching cycles, the low-side MOSFET on-time is slowly increased to prevent excessive current sinking in the event the device is started with a prebiased output. Following the first 128 clock cycles, the low-side MOSFET and the high-side MOSFET on-times are fully complementary.

7.4.2 Operation with CNTL Signal Control

According to the value in the ON_OFF_CONFIG register, the devices can be commanded to use the CNTL pin to enable or disable regulation, regardless of the state of the OPERATION command. The CNTL pin can be configured as either active high or active low (inverted) logic.

7.4.3 Operation with OPERATION Control

According to the value in the ON_OFF_CONFIG register, the devices can be commanded to use the OPERATION command to enable or disable regulation, regardless of the state of the CNTL signal.

7.4.4 Operation with CNTL and OPERATION Control

According to the value in the ON_OFF_CONFIG register, the devices can be commanded to require both a signal on the CNTL pin, and the OPERATION command to enable or disable regulation.

7.5 Programming

7.5.1 Supported PMBus Commands

The commands listed in 表 4 are implemented as described to conform to the PMBus 1.3 specification. 表 4 also lists the default for the bit behavior and register values.

表 4. Supported PMBus Commands and Default Values

CMD CODE	PMBus 1.3 COMMAND NAME	PMBus COMMAND DESCRIPTION	DEFAULT BEHAVIOR	DEFAULT REGISTER VALUE	NVM
01h	OPERATION	Can be configured through ON_OFF_CONFIG to be used to turn the output on and off with or without input from the CTRL pin.	OPERATION is not used to enable regulation	00h	No
02h	ON_OFF_CONFIG	Configures the combination of CNTL pin input and OPERATION command for turning output on and off.	CNTL only. Active High	16h	Yes
03h	CLEAR_FAULTS	Clears all fault status registers to 0x00 and releases $\overline{\text{SMBALERT}}$.	Write-only	n/a	No
10h	WRITE_PROTECT	Used to control writing to the volatile operating memory (PMBus and restore from EEPROM).	Allow writes to all registers	00h	Yes
11h	STORE_DEFAULT_ALL	Stores all current storable register settings into EEPROM as new defaults.	Write-only	n/a	No
12h	RESTORE_DEFAULT_ALL	Restores all storable register settings from EEPROM.	Write-only	n/a	No
15h	RESTORE_USER_ALL	Stores all current storable register settings into EEPROM as new defaults.	Write-only	n/a	No
16h	RESTORE_USER_ALL	Restores all storable register settings from EEPROM.	Write-only	n/a	No
19h	CAPABILITY	Provides a way for a host system to determine key PMBus capabilities of the device.	Read only. PMBus v1.3, 400 kHz, PEC and SMBus Alert Response Protocol supported.	B0h	No
1Bh	SMBALERT_MASK	Mask Warn or Fault status bits	Mask PGOODz only	n/a	Yes
20h	VOUT_MODE	Read-only output mode indicator.	Linear, exponent = –9	17h	No
21h	VOUT_COMMAND	Default Regulation Setpoint	600mV	0133h	Yes

版权 © 2016, Texas Instruments Incorporated

Programming (接下页)

表 4. Supported PMBus Commands and Default Values (接下页)

CMD CODE	PMBus 1.3 COMMAND NAME	PMBus COMMAND DESCRIPTION	DEFAULT BEHAVIOR	DEFAULT REGISTER VALUE	NVM
24h	VOUT_MAX	Sets the maximum output voltage. VOUT_MAX imposes a higher bound to any attempted V_{OUT} setting.	If VOUT_SCALE_LOOP = 1: VOUT_MAX will restore to 1.65 V.	034Dh	No
			If VOUT_SCALE_LOOP = 0.5: VOUT_MAX will restore to 3.3 V.	069Ah	
			If VOUT_SCALE_LOOP = 0.25: VOUT_MAX will restore to 6 V.	0C00h	
27h	VOUT_TRANSITION_RATE	Sets the rate at which the output should change voltage.	1 mV/us	D03Ch	No
29h	VOUT_SCALE_LOOP	Sets output sense scaling ratio for main control loop.	1	F004h	Yes
2Bh	VOUT_MIN	Sets the minimum output voltage. VOUT_MIN imposes a lower bound to any attempted V_{OUT} setting.	If VOUT_SCALE_LOOP = 1: VOUT_MIN will restore to 0.35 V.	00B3h	No
			If VOUT_SCALE_LOOP = 0.5: VOUT_MIN will restore to 0.7 V.	0166h	
			If VOUT_SCALE_LOOP = 0.25: VOUT_MIN will restore to 1.4 V.	02CCh	
35h	VIN_ON	Sets value of input voltage at which the device should start power conversion.	4.5 V	F012h	Yes
36h	VIN_OFF	Sets value of input voltage at which the device should stop power conversion.	4 V	F010h	Yes
39h	IOUT_CAL_OFFSET	Can be set to null out offsets in the current sensing circuit.	0.0000 A	E000h	Yes
41h	VOUT_OV_FAULT_RESPONSE	Sets output overvoltage fault response.	Restart	BFh	Yes
45h	VOUT_UV_FAULT_RESPONSE	Sets output undervoltage fault response.	Restart	BFh	Yes
46h	IOUT_OC_FAULT_LIMIT	Sets the value of the output current that causes an overcurrent fault condition.	42 A	F854h	Yes
47h	IOUT_OC_FAULT_RESPONSE	Sets response to output overcurrent faults to latch-off, hiccup mode or ignore.	Restart	FFh	Yes
4Ah	IOUT_OC_WARN_LIMIT	Sets the value of the output current that causes an overcurrent warning condition.	37 A	F84Ah	No
4Fh	OT_FAULT_LIMIT	Sets the value of the sensed temperature that causes an overtemperature fault condition.	145°C	0091h	Yes
50h	OT_FAULT_RESPONSE	Sets response to over temperature faults to latch-off, hiccup mode or ignore.	Ignore	3Fh	Yes
51h	OT_WARN_LIMIT	Sets the value of the sensed temperature that causes an overtemperature warning condition.	120°C	0078h	No
60h	TON_DELAY	Sets the turnon delay.	0 ms	0000h	Yes
61h	TON_RISE	Sets the time from when the output starts to rise until the voltage has entered the regulation band.	3 ms	0003h	Yes
62h	TON_MAX_FAULT_LIMIT	Sets an UPPER limt in milliseconds, on how long the unit can attempt to power up the output without reaching the output undervoltage fault limit. The time begins counting as the device enters the soft-start period.	Disabled	0000h	No
63h	TON_MAX_FAULT_RESPONSE	Sets the soft start timeout fault response.	Restart	BFh	Yes
64h	TOFF_DELAY	Sets the turnoff delay.	0 ms	0000h	Yes
65h	TOFF_FALL	Sets the soft stop fall time.	0 ms	0000h	Yes
78h	STATUS_BYTE	Returns one byte summarizing the most critical faults.		Current status	No
79h	STATUS_WORD	Returns two bytes summarizing fault and warning conditions.		Current status	No
7Ah	STATUS_VOUT	Returns one byte detailing if an output fault or warning has occurred		Current status	No

版权 © 2016, Texas Instruments Incorporated

Programming (接下页)

表 4. Supported PMBus Commands and Default Values (接下页)

CMD CODE	PMBus 1.3 COMMAND NAME	PMBus COMMAND DESCRIPTION	DEFAULT BEHAVIOR	DEFAULT REGISTER VALUE	NVM
7Bh	STATUS_IOUT	Returns one byte detailing if an overcurrent fault or warning has occurred		Current status	No
7Ch	STATUS_INPUT	Returns one byte of information relating to the status of the converter's input related faults.		Current status	No
7Dh	STATUS_TEMPERATURE	Returns one byte detailing if a sensed temperature fault or warning has occurred.		Current status	No
7Eh	STATUS_CML	Returns one byte containing PMBus serial communication faults.		Current status	No
80h	STATUS_MFR_SPECIFIC	Returns one byte detailing if internal overtemperature or address detection fault has occurred.		Current status	No
8Bh	READ_VOUT	Returns the output voltage in volts.	Read only	Current status	No
8Ch	READ_IOUT	Returns the output current in amps.	Read only	Current status	No
8Dh	READ_TEMPERATURE_1	Returns the sensed die temperature in degrees Celsius.	Read-only	Current status	No
98h	PMBUS_REVISION	Returns PMBus revision to which the device is compliant.	PMBus 1.3	33h	No
ADh	IC_DEVICE_ID	This Read-only Block Read command returns a single word (16 bits) with the unique Device Code identifier for each device for which this device can be configured. The BYTE_COUNT field in the Block Read command is 2 (indicating 2 bytes follow): Low Byte first, then High Byte.	TPS546C23	4623h	No
AEh	IC_DEVICE_REV	This Read-only Block Read command returns a single word (16 bits) with the unique Device revision identifier. The BYTE_COUNT field in the Block Read command is 2 (indicating 2 bytes follow): Low Byte first, then High Byte.	Read only	0001h	No
D0h	MFR_SPECIFIC_00	User scratch pad.		0000h	Yes
D4h	VREF_TRIM (MFR_SPECIFIC_04) (D4h)	Applies a fixed offset voltage to the Error Amplifier Reference voltage (EA_REF).	Fixed offset of 0 mV	0000h	Yes
D5h	STEP_VREF_MARGIN_HIGH (MFR_SPECIFIC_05) (D5h)	Increases the value of the reference voltage by shifting the reference higher.	If RSMHI_VAL = 0: STEP_VREF_MARGIN_HIGH will restore to 17.6 mV	If RSMHI_VAL = 0: 0009h	No
			If RSMHI_VAL = 1: STEP_VREF_MARGIN_HIGH will restore to 29.3 mV	If RSMHI_VAL = 1: 000fh	
D6h	STEP_VREF_MARGIN_LOW (MFR_SPECIFIC_06) (D6h)	Decreases the value of the reference voltage by shifting the reference lower.	If RSMLO_VAL = 0: STEP_VREF_MARGIN_LOW will restore to –17.6 mV	If RSMLO_VAL = 0: fff7h	No
			If RSMLO_VAL = 1: STEP_VREF_MARGIN_LOW will restore to –29.3 mV	If RSMLO_VAL = 1: fff1h	
D7h	PCT_OV_UV_WRN_FLT_LIMITS (MFR_SPECIFIC_07) (D7h)	Sets the PGOOD, VOUT_UNDER_VOLTAGE (UV) and VOUT_OVER_VOLTAGE (OV) Limits as a percentage of nominal.	–17% for UV Fault, –12% for UV Warning, +12% for OV Warning, +17% for OV Fault.	00h	Yes
E5h	OPTIONS (MFR_SPECIFIC_21)	Sets user selectable options.	See detailed command description	1184h	Yes
F0h	MISC_CONFIG_OPTIONS (MFR_SPECIFIC_32)	Sets miscellaneous user selectable options.	See detailed command description	0013h	Yes

7.6 Register Maps

This family of devices supports the following commands from the PMBus 1.3 specification.

Copyright © 2016, Texas Instruments Incorporated

Table 5. Legend for Register Access Type

Access Type	Code	Description
Read Type		
R	r	Read
Write Type		
W	w	Write
Other		
superscript E r/w^{E}	^{E}	Bit is backed up with nonvolatile EEPROM

7.6.1 OPERATION (01h)

The OPERATION command turns the device output on or off in conjunction with input from the CNTL signal. It is also used to set the output voltage to the upper or lower margin voltages. The unit stays in the commanded operating mode until a subsequent OPERATION command or a change in the state of the CNTL pin instructs the device to change to another mode.

For PWM loop slave device, which is recognized during power-up calibration, this command cannot be accessed. Any writes to this command will be ignored. An attempt to read or write this command will result in a NACK'd command, the reporting of an IVC fault, and triggering of SMB_ALERT.

COMMAND	OPERATION							
Format	Unsigned binary							
Bit Position	7	6	5	4	3	2	1	0
Access	r/w	r/w	r/w	r/w	r/w	r/w	r	r
Function	ON	OFF	MARGIN				X	X
Default Value	0	0	0	0	0	0	X	X

7.6.1.1 On Bit

This bit is an enable command to the converter.

- 0: output switching is disabled. Both drivers placed in an off or low state.
- 1: output switching is enabled if the input voltage is above undervoltage lockout, OPERATION is configured as a gating signal in ON_OFF_CONFIG, and no fault conditions exist.

7.6.1.2 Off Bit

This bit sets the turnoff behavior when commanding the unit to turn off through OPERATION[7] (the *On* bit).

- 0: Immediately turn off the output (not honoring the programmed turnoff delay (TOFF_DELAY) and ramp down (TOFF_FALL)) when commanded off through OPERATION[7] (the *On* bit).
- 1: Use the programmed turnoff delay (TOFF_DELAY) and ramp down (TOFF_FALL) when commanded off through OPERATION[7] (also called *soft off*).

NOTE

The device ignores any values written to read-only bits. Additionally, both the on and off bits being set at the same time is not allowed and considered invalid data per section 12.1 of the PMBus Specification Part II; any attempt to do so causes the device to set the cml bit in the STATUS_BYTE and the ivd bit in the STATUS_CML registers, and triggers SMBALERT signal.

7.6.1.3 Margin Bit

If Margin Low is enabled, load the value from the STEP_VREF_MARGIN_LOW command. If Margin High is enabled, load the value from the STEP_VREF_MARGIN_HIGH command.

- 0001: Margin Off. Output voltage source is VOUT_COMMAND. OV and UV faults are ignored.
- 0000, 0010, 0011: Margin Off. Output voltage source is VOUT_COMMAND. OV/UV faults behave normally as programmed in their respective fault response registers.

Copyright © 2016, Texas Instruments Incorporated

- 0101: Margin Low (Ignore Fault). Output voltage defined directly below.
- 0110: Margin Low (Act On Fault). Output voltage defined directly below.
- 1001: Margin High (Ignore Fault). Output voltage defined directly below.
- 1010: Margin High (Act On Fault). Output voltage defined directly below.
- 11XX, 0100, 0111, 1000, 1011: Shall be invalid and shall declare an Invalid Data Fault (Part II Rev 1.3 Section 10.9.3, Page 52)

VOUT_MARGIN_LOW data shall be equal to:
VOUT_COMMAND + (VREF_TRIM – STEP_VREF_MARGIN_LOW) / VOUT_SCALE_LOOP

VOUT_MARGIN_HIGH data shall be equal to:
VOUT_COMMAND + (VREF_TRIM + STEP_VREF_MARGIN_HIGH) / VOUT_SCALE_LOOP

For the Margin Low, Ignore Fault configuration (essentially [5:2] = 4'b0101), any incoming UV faults shall trigger the normal UVF status, and trigger SMB_ALERT (albeit the state machine response will be to ignore and not respond). If the desired response is to have the device to not trigger SMB_ALERT for UVF events when margining, they must set the UVF SMBALERT_MASK bit. For the Margin High, Ignore Fault configuration (essentially [5:2] = 4'b1001), any incoming OV faults shall trigger the normal OVF status, and trigger SMB_ALERT (albeit the state machine response will be to ignore and not respond). If the desired response is to have the device to not trigger SMB_ALERT for UVF events when margining, they must set the UVF SMBALERT_MASK bit. OVF and UVF can also be ignored when VOUT_COMMAND is the VOUT source by programming [5:2] to a value of 4'b0001. OVF and UVF events will still set status and trigger SMB_ALERT.

7.6.2 ON_OFF_CONFIG (02h)

The ON_OFF_CONFIG command configures the combination of CNTL pin input and serial bus commands needed to turn the unit on and off. The contents of this register can be stored to nonvolatile memory using the STORE_DEFAULT_ALL (11h) command. The default value in ON_OFF_CONFIG register is to have the device power up by CNTL pin only with the active high polarity and use the programmed turnoff delay (TOFF_DELAY) and ramp down (TOFF_FALL) for powering off the converter.

For PWM loop slave device, this command cannot be accessed. Any writes to this command will be ignored. An attempt to read or write this command will result in a NACK'd command, the reporting of an IVC fault, and triggering of SMB_ALERT.

COMMAND	ON_OFF_CONFIG							
Format	Unsigned binary							
Bit Position	7	6	5	4	3	2	1	0
Access	r	r	r	r/w^E	r/w^E	r/w^E	r/w^E	r/w^E
Function	X	X	X	pu	cmd	cpr	pol	cpa
Default Value	X	X	X	1	0	1	1	0

7.6.2.1 pu Bit

The pu bit sets the default to either operate any time power is present or for power conversion to be controlled by CNTL pin and PMBus OPERATION command. This bit is used in conjunction with the cpr, cmd, and on bits to determine start up.

BIT VALUE	ACTION
0	Device powers up any time power is present regardless of state of the CNTL pin.
1	Device does not power up until commanded by the CNTL pin and/or OPERATION command as programmed in bits [3:0] of the ON_OFF_CONFIG register.

7.6.2.2 cmd Bit

The cmd bit controls how the device responds to the OPERATION command. This bit is used in conjunction with the cpr, pu, and on bits to determine start up.

Copyright © 2016, Texas Instruments Incorporated

BIT VALUE	ACTION
0	Device ignores the “on” bit in the OPERATION command.
1	Device responds to the “on” bit in the OPERATION command.

7.6.2.3 cpr Bit

The cpr bit sets the CNTL pin response. This bit is used in conjunction with the cmd, pu, and on bits to determine start up.

BIT VALUE	ACTION
0	Device ignores the CNTL pin. Power conversion is controlled only by the OPERATION command.
1	Device requires the CNTL pin to be asserted to start the unit.

7.6.2.4 pol Bit

The pol bit controls the polarity of the CNTL pin. For a change to become effective, the contents of the ON_OFF_CONFIG register must be stored to nonvolatile memory using the STORE_DEFAULT_ALL command and the device power cycled. Simply writing a new value to this bit does not change the polarity of the CNTL pin.

BIT VALUE	ACTION
0	CNTL pin is active low.
1	CNTL pin is active high.

7.6.2.5 cpa Bit

The cpa bit sets the CNTL pin action when turning the converter off.

BIT VALUE	ACTION
0	Use the programmed turnoff delay (TOFF_DELAY) and ramp down (TOFF_FALL).
1	Immediately turn off the output (not honoring the programmed turnoff delay (TOFF_DELAY) and ramp down (TOFF_FALL)).

7.6.3 CLEAR_FAULTS (03h)

The CLEAR_FAULTS command is used to clear any fault bits that have been set. This command clears all bits in all status registers simultaneously. At the same time, the device negates (clears, releases) its SMBALERT signal output if the device is asserting the SMBALERT signal. The CLEAR_FAULTS command does not cause a unit that has latched off for a fault condition to restart. If the fault is still present when the bit is cleared, the fault bit is immediately reset and the host notified by the usual means.

NOTE

- To get a reliable clear fault result, the clear_fault command should be issued (8 × TON_RISE + TON_DELAY) after the switcher shuts down.
- In the case of OV fault with a *latch off* response, the LS FET latches on when the fault is detected. If the OV_RESP_SEL Bit in (F0h) MFR_SPECIFIC_32 is set to 1, then the LS FET releases when the FB pin voltage falls below 0.2 V. Otherwise, it remains on until the CLEAR_FAULTS command is issued. The CLEAR FAULTS command causes the LS FET to turn off.
- CNTL pin toggling can also clear fault, but the logic low duration should be higher than 100 ns for the internal circuit to recognize.

7.6.4 WRITE_PROTECT (10h)

The WRITE_PROTECT command is used to control writing to the PMBus device. The intent of this command is to provide protection against accidental changes. This command is not intended to provide protection against deliberate or malicious changes to the device configuration or operation. All supported command parameters may have their parameters read, regardless of the WRITE_PROTECT settings. Write protection also prevents protected registers from being updated in the event of a RESTORE_DEFAULT_ALL. The contents of this register can be stored to nonvolatile memory using the STORE_DEFAULT_ALL command.

Copyright © 2016, Texas Instruments Incorporated

COMMAND	WRITE_PROTECT							
Format	Unsigned binary							
Bit Position	7	6	5	4	3	2	1	0
Access	r/w^{E}	r/w^{E}	r/w^{E}	X	X	X	X	X
Function	bit7	bit6	bit5	X	X	X	X	X
Default Value	0	0	0	X	X	X	X	X

Copyright © 2016, Texas Instruments Incorporated

7.6.4.1 bit5

BIT VALUE	ACTION
0	Enable all writes as permitted in bit6 or bit7
1	Disable all writes except the WRITE_PROTECT, OPERATION, ON_OFF_CONFIG, and VOUT_COMMAND. (bit6 and bit7 must be 0 to be valid data)

7.6.4.2 bit6

BIT VALUE	ACTION
0	Enable all writes as permitted in bit5 or bit7
1	Disable all writes except for the WRITE_PROTECT, and OPERATION commands. (bit5 and bit7 must be 0 to be valid data)

7.6.4.3 bit7

BIT VALUE	ACTION
0	Enable all writes as permitted in bit5 or bit6
1	Disable all writes except for the WRITE_PROTECT command. (bit5 and bit6 must be 0 to be valid data)

In any case, only one of the three bits may be set at any one time. Attempting to set more than one bit results in an alert being generated and the cml bit is STATUS_WORD being set. An invalid setting of the WRITE_PROTECT command results in no write protection.

Data Byte Value	ACTION
1000 0000	Disables all WRITES except to the WRITE_PROTECT command.
0100 0000	Disables all WRITES except to the WRITE_PROTECT, and OPERATION commands.
0010 0000	Disables all WRITES except to the WRITE_PROTECT, OPERATION, ON_OFF_CONFIG, and VOUT_COMMAND commands.

7.6.5 STORE_DEFAULT_ALL (11h)

The STORE_DEFAULT_ALL command stores all of the current storable register settings in the EEPROM memory as the new defaults on power up.

It is permissible to use this command while the device is switching. Note however that the device continues to switch but ignores all fault conditions until the internal store process has completed. Issuing STORE_DEFAULT_ALL also causes the device to be unresponsive through PMBus for a period of approximately 100 ms.

EEPROM programming faults cause the device to NACK and set the cml bit in the STATUS_BYTE and the mem bit in the STATUS_CML registers.

7.6.6 RESTORE_DEFAULT_ALL (12h)

The RESTORE_DEFAULT_ALL command restores all of the storable register settings from EEPROM memory to those registers which are unprotected according to current setting of WRITE_PROTECT. Issuing STORE_DEFAULT_ALL also causes the device to be unresponsive through PMBus for a period of approximately 100 ms.

Copyright © 2016, Texas Instruments Incorporated

NOTE

Do not use this command while the device is actively switching, this causes the device to stop switching and the output voltage to fall during the restore event. Depending on loading conditions, the output voltage could reach an undervoltage level and trigger an undervoltage fault response if programmed to do so. The command can be used while the device is switching, but this usage is not recommended as it results in a restart that could disrupt power sequencing requirements in more complex systems. TI strongly recommends stopping the device before issuing this command.

7.6.7 STORE_USER_ALL (11h)

The STORE_USER_ALL command stores all of the current storable register settings in the EEPROM memory as the new defaults on power up.

It is permissible to use this command while the device is switching. Note however that the device continues to switch but ignores all fault conditions until the internal store process has completed. Issuing STORE_USER_ALL also causes the device to be unresponsive through PMBus for a period of approximately 100 ms.

EEPROM programming faults cause the device to NACK and set the cml bit in the STATUS_BYTE and the mem bit in the STATUS_CML registers.

This command shres the same harware implementation as STORE_DEFAULT_ALL.

7.6.8 RESTORE_USER_ALL (12h)

The RESTORE_USER_ALL command restores all of the storable register settings from EEPROM memory to those registers which are unprotected according to current setting of WRITE_PROTECT. Issuing STORE_USER_ALL also causes the device to be unresponsive through PMBus for a period of approximately 100 ms.

This command shres the same harware implementation as RESTORE_DEFAULT_ALL.

NOTE

Do not use this command while the device is actively switching, this causes the device to stop switching and the output voltage to fall during the restore event. Depending on loading conditions, the output voltage could reach an undervoltage level and trigger an undervoltage fault response if programmed to do so. The command can be used while the device is switching, but this usage is not recommended as it results in a restart that could disrupt power sequencing requirements in more complex systems. TI strongly recommends stopping the device before issuing this command.

7.6.9 CAPABILITY (19h)

The CAPABILITY command provides a way for a host system to determine some key capabilities of this PMBus device.

COMMAND	CAPABILITY							
Format	Unsigned binary							
Bit Position	7	6	5	4	3	2	1	0
Access	r	r	r	r	r	r	r	r
Function	PEC	SPD		ALRT	Reserved			
Default Value	1	0	1	1	0	0	0	0

The default values indicate that the device supports packet-error checking (PEC), a maximum bus speed of 400 kHz (SPD) and the SMBus alert-response protocol using SMBALERT.

7.6.10 SMBALERT_MASK (1Bh)

The SMBALERT_MASK command can be used to prevent a warning or fault condition from asserting the SMBALERT signal.

Copyright © 2016, Texas Instruments Incorporated

NOTE

The command uses the SMBus Write Word command protocol to overlay a “mask byte” with an associated/designated status register. It uses the SMBus Block Write/Block Read protocol – with a block size = 1, to read the mask settings for any given status register. If the host in the Block_Count field of the Block Write portion sends a block size unequal to 1 the device returns a NACK. The device always returns a Block Count of 1 upon reads of SMBALERT_MASK.

The bits in the mask byte align with the bits in the corresponding status register. For example, if the STATUS_TEMPERATURE command were sent with the mask byte 01000000b, then an Overtemperature Warning condition would be blocked from asserting SMBALERT. Please refer to the PMBus v1.3 specification - section 15.38 (SMBALERT_MASK Command) and the SMBus specification Block Write/Block Read protocol for further details.

There are 19 maskable SMBALERT sources in the TPS546C23. Each of these 19 status conditions has an associated EEPROM backed mask bit. These sources are represnted and identified in the status register command descriptions by a particular status bit denoted as having EEPROM backup (for example a bit access of r/w^E). Writes and reads to SMBALERT_MASK command code accepts only the following as valid STATUS_x command codes:

- STATUS_WORD
- STATUS_VOUT
- STATUS_IOUT
- STATUS_INPUT
- STATUS_TEMPERATURE
- STATUS_CML
- STATUS_MFR_SPECIFIC

Attempting to write a mask byte for any STATUS_X command code other than this list causes the device to set the cml bit in the STATUS_BYTE and the ivd bit in the STATUS_CML registers, and triggers SMBALERT. Attempting to read a mask byte for any STATUS_x command code other than this list returns 00h for the mask byte. Refer to these individual command descriptions for further details on their specific SMBALERT masking capabilities.

There is 1 unique status bit in the TPS546C23 that warrants special clarification: PGOOD_Z (STATUS_WORD[10]) is maskable as an SMBALERT source through SMBALERT_MASK commands to STATUS_WORD. If the user wants to write, or read, the mask bit for PGOOD_Z, the user must put 79h in the STATUS_x COMMAND_CODE field of the SMBALERT_MASK command. PGOOD_Z SMBALERT_MASK bit default to 1.

7.6.11 VOUT_MODE (20h)

The PMBus specification dictates that the data word for the VOUT_MODE command is one byte that consists of a 3-bit mode and 5-bit exponent parameter, as shown below. The 3-bit mode sets whether the device uses the Linear or Direct modes for output voltage related commands. The 5-bit parameter sets the exponent value for the linear data mode. The mode and exponent parameters are fixed and do not permit the user to change the values.

For loop slave device, this command cannot be accessed. Any writes to this command will be ignored. An attempt to read or write this command will result in a NACK’d command, the reporting of an IVC fault, and triggering of SMB_ALERT.

COMMAND	VOUT_MODE							
Bit Position	7	6	5	4	3	2	1	0
Access	r	r	r	r	r	r	r	r
Function	Mode			Exponent				
Default Value	0	0	0	1	0	1	1	1

Copyright © 2016, Texas Instruments Incorporated

7.6.11.1 Mode Bit

Value fixed at 000, linear mode.

7.6.11.2 Exponent Bit

Value fixed at 10111, Exponent for Linear mode values is –9 (equivalent of 1.95mV/count).

7.6.12 VOUT_COMMAND (21h)

The VOUT_COMMAND command sets the output voltage in volts. The contents of this register can be stored to nonvolatile memory using the STORE_DEFAULT_ALL command. The exponent is set be VOUT_MODE at –9 (equivalent of 1.953 mV/count). The programmed internal reference voltage is computed as:

$$EA_REF = [(VOUT_COMMAND \times VOUT_SCALE_LOOP) + (VREF_TRIM + STEP_VREF_MARGIN_HIGH \times OPERATION[5] + STEP_VREF_MARGIN_LOW \times OPERATION[4])] \times 2^{-9} \text{ (V)} \quad (5)$$

For loop slave device, this command cannot be accessed. Any writes to this command will be ignored. An attempt to read or write this command will result in a NACK'd command, the reporting of an IVC fault, and triggering of SMB_ALERT.

The range of valid VOUT_COMMAND values is dependent upon the configured VOUT_SCALE_LOOP (29h) as follows:

VOUT_SCALE_LOOP	Vout Range (volts)	VOUT_COMMAND data valid range
1	0.35 to 1.65	179 to 845
0.5	0.7 to 3.3	358 to 1690
0.25	1.4 to 5.5	716 to 2816

Any VOUT_COMMAND > 2816 (5.5-V maximum V_{OUT} equivalent) is treated as *invalid data*:

- NACK the data byte
- Do not update VOUT_COMMAND
- Set CML bit in STATUS_BYTE
- Set IVD bit in STATUS_CML

If the value programmed to VOUT_COMMAND exceeds the value stored in either VOUT_MIN or VOUT_MAX. In this case, VOUT_COMMAND will be set to the appropriate VOUT_MIN or VOUT_MAX value (which ever was violated). See the command descriptions for (28h) VOUT_MIN or (24h) VOUT_MAX for the specific status bits set in either case.

COMMAND	VOUT_COMMAND															
Format	Linear, unsigned binary															
Bit Position	7	6	5	4	3	2	1	0	7	6	5	4	3	2	1	0
Access	r	r	r	r	r/w^E	r/w^E	r/w^E	r/w^E	r/w^E	r/w^E	r/w^E	r/w^E	r/w^E	r/w^E	r/w^E	r/w^E
Function	Mantissa															
Default Value	0	0	0	0	0	0	0	1	0	0	1	1	0	0	1	1

7.6.12.1 Exponent

Value fixed at 10111, Exponent for Linear mode values is –9 (equivalent of 1.95mV/count, specified in VOUT_MODE command).

7.6.12.2 Mantissa

This is the Mantissa for the linear format. The default for this bit value is: 0000 0001 0011 0011 (binary) 486 (decimal) (equivalent Vout default = 0.6 V).

7.6.13 VOUT_MAX (24h)

The VOUT_MAX command sets the maximum output voltage. The purpose is to protect the devices on the output rail supplied by this device from a higher than acceptable output voltage. VOUT_MAX imposes an upper bound to any attempt to program the output voltage to a VOUT_EQUIV setting by changing any of the following registers:

Copyright © 2016, Texas Instruments Incorporated

- VOUT_COMMAND
- VOUT_MAX
- VOUT_MIN
- OPERATION[5]
- OPERATION[4]
- VREF_TRIM
- STEP_VREF_MARGIN_HIGH
- STEP_VREF_MARGIN_LOW
- VOUT_SCALE_LOOP

The exponent is set be VOUT_MODE at –9 (equivalent of 1.953 mV/count). Use Equation 6 to calculate the programmed output voltage.

$$\text{MAXIMUM } V_{OUT} \text{ allowed} = \text{VOUT_MAX} \times \text{VOUT_MODE (V)} = \text{VOUT_MAX} \times 2^{-9} \text{ (V)} \quad (6)$$

The range of valid VOUT_MAX values is dependent upon the configured (29h) VOUT_SCALE_LOOP as shown in Equation 7.

$$\text{MAXIMUM VOUT Reference allowed} = \text{VOUT_MAX} \times \text{VOUT_SCALE_LOOP x VOUT_MODE (V)} = \text{VOUT_MAX} \times \text{VOUT_SCALE_LOOP} \times 2^{-9} \text{ (V)} \quad (7)$$

Copyright © 2016, Texas Instruments Incorporated

If, while the output voltage is turned on, any attempt is made to program: (1) VOUT_EQUIV to be greater than VOUT_MAX; (2) VOUT_MAX to be less than, or equal to, VOUT_MIN, or; (3) VOUT_MIN to be greater than, or equal to, VOUT_MAX – the device will:

- Clamp the internal reference voltage to VOUT_MAX × VOUT_SCALE_LOOP × VOUT_MODE value. In the event VOUT_MAX < VOUT_MIN, VOUT_MAX shall dominate.
- Sets the OTH (other) bit in the STATUS_BYTE
- Sets the VFW bit in the STATUS_WORD
- Sets the VOUT_MAX_MIN_Warning bit in the STATUS_VOUTregister
- Notifies the host through the $\overline{\text{SMBALERT}}$ pin

For loop slave device, this command cannot be accessed. Any writes to this command will be ignored. An attempt to read or write this command will result in a NACK'd command, the reporting of an IVC fault, and triggering of SMB_ALERT.

COMMAND	VOUT_MAX															
Format	Linear, unsigned binary															
Bit Position	7	6	5	4	3	2	1	0	7	6	5	4	3	2	1	0
Access	r	r	r	r	r/w	r/w	r/w	r/w	r/w	r/w	r/w	r/w	r/w	r/w	r/w	r/w
Function	Mantissa															

7.6.13.1 Exponent

Value fixed at 10111, Exponent for Linear mode values is –9 (equivalent of 1.95 mV/count, specified in VOUT_MODE command).

7.6.13.2 Mantissa

The range of valid VOUT_MAX values is dependent upon the configured (29h) VOUT_SCALE_LOOP as follows.

If VOUT_SCALE_LOOP = 1:

- default: 0000 0011 0100 1101 (binary) 845 (decimal) (equivalent VOUT_MAX = 1.65 V)
- Minimum: 0000 0001 0001 1010 (binary) 282 (decimal) (equivalent VOUT_MAX = 0.55 V)
- Maximum: 0000 0011 0100 1101 (binary) 845 (decimal) (equivalent VOUT_MAX = 1.65 V)

If VOUT_SCALE_LOOP = 0.5:

- default: 0000 0110 1001 1010 (binary) 1690 (decimal) (equivalent VOUT_MAX = 3.3 V)
- Minimum: 0000 0010 0011 0100 (binary) 564 (decimal) (equivalent VOUT_MAX = 1.1 V)
- Maximum: 0000 0110 1001 0000 (binary) 1690 (decimal) (equivalent VOUT_MAX = 3.3 V)

If VOUT_SCALE_LOOP = 0.25:

- default: 0000 1100 0000 0000 (binary) 3072 (decimal) (equivalent VOUT_MAX = 6 V)
- Minimum: 0000 0100 0110 1000 (binary) 1128 (decimal) (equivalent VOUT_MAX = 2.2 V)
- Maximum: 0000 1100 0000 0000 (binary) 3072 (decimal) (equivalent VOUT_MAX = 6 V)

7.6.14 VOUT_TRANSITION_RATE (27h)

The VOUT_TRANSITION_RATE command sets the rate of change in mV/µs of any output voltage change during normal operation (also includes vout changes in TOFF_DELAY state. In contrast the soft-start transition rate is controlled by TON_RISE and the TOFF_FALL transition rate is controlled by TOFF_FALL command).

For PWM loop slave device, this command cannot be accessed. Any writes to this command will be ignored. An attempt to read or write this command will result in a NACK'd command, the reporting of an IVC fault, and triggering of SMB_ALERT.

Copyright © 2016, Texas Instruments Incorporated

Only 8 fixed output voltage transition rates are available in the device. As such, the range of programmed V_{OUT}-transition rates are sub-divided into 8 *buckets* that then selects one of the 8 fixed V_{OUT}-transition rates. Programmed values are rounded to the nearest *bucket/transition rate* as outlined below:

COMMAND	VOUT_TRANSITION_RATE															
Format	Linear, two's complement binary															
Bit Position	7	6	5	4	3	2	1	0	7	6	5	4	3	2	1	0
Access	r	r	r	r	r	r	r	r	r	r/w	r/w	r/w	r/w	r/w	r/w	r/w
Function	Exponent					Mantissa										
Default Value	1	1	0	1	0	0	0	0	0	0	1	1	1	1	0	0

7.6.14.1 Exponent

default: 11010 (binary) –6 (decimal) (0.015625)

These default settings are not programmable.

7.6.14.2 Mantissa

default: 000 0011 1100 (binary) 60 (decimal) (equivalent VOUT_TRANSITION_RATE = 1 mV/µs)

NOTE

Using VOUT_TRANSITION_RATE to slew Vref faster than the voltage loop can track is possible. This usage causes a control related overshoot/undershoot response on the output voltage.

VOUT_TRANSITION rate (mV/µs)	VOUT_TRANSITION Mantissa (d)	
	Greater than	Less than or equal to
0.067	—	5
0.1	5	7
0.143	7	12
0.222	12	17
0.333	17	25
0.5	25	47
1	47	79
1.5	79	—

7.6.15 VOUT_SCALE_LOOP (29h)

The VOUT_SCALE_LOOP command is equal to the feedback resistor ratio (R_{BIAS} / (R_{BIAS} + R1) in the configuration shown in 图 25). This command is limited to only 3 possible options/ratios: 1 (default, no R_{BIAS} needed), 0.5, and 0.25. Attempting to write a value unequal to one of these three options cause the device to set the cml bit in the STATUS_BYTE, and the ivd bit in the STATUS_CML registers. Additionally, SMBALERT is asserted and the value of VOUT_SCALE_LOOP remains unchanged. The contents of this register can be stored to nonvolatile memory using the STORE_DEFAULT_ALL command.

For loop slave device, this command cannot be accessed. Any writes to this command will be ignored. An attempt to read or write this command will result in a NACK'd command, the reporting of an IVC fault, and triggering of SMB_ALERT.

NOTE

Construct the feedback resistor ratio appropriately (see 表 1). If the VOUT_SCALE_LOOP does not match the external feedback resistor ratio, the converter will regulate the output with the reference voltage as outlined in 公式 1 and 公式 2.

Program the VOUT_SCALE_LOOP setting before the output is turned on.

Copyright © 2016, Texas Instruments Incorporated

For the range checking to work properly and to avoid invalid data scenarios:

- VOUT_SCALE_LOOP should be changed first, if needed.
- VOUT_MIN and VOUT_MAX should be changed after VOUT_SCALE_LOOP, if needed.
- Additionally, it is assumed that VOUT_SCALE_LOOP will be programmed before the output is turned on; but, the hardware will not do anything to prohibit changing VOUT_SCALE_LOOP in any state.

COMMAND	VOUT_SCALE_LOOP															
Format	Linear, two's complement binary															
Bit Position	7	6	5	4	3	2	1	0	7	6	5	4	3	2	1	0
Access	r	r	r	r	r	r	r	r	r	r	r	r	r	r/w^{E}	r/w^{E}	r/w^{E}
Function	Exponent					Mantissa										
Default Value	1	1	1	1	0	0	0	0	0	0	0	0	0	1	0	0

7.6.15.1 Exponent

default: 11110 (binary) –2 (decimal) (equivalent LSB = 0.25)

These default settings are not programmable.

7.6.15.2 Mantissa

default: 000 0000 0100 (binary) 4 (decimal) (equivalent VOUT_SCALE_LOOP voltage = 1)

For VOUT_SCALE_LOOP = 1, mantissa = 004h. ($4 \times 2^{-2} = 1$)

For VOUT_SCALE_LOOP = 0.5, mantissa = 002h. ($2 \times 2^{-2} = 0.5$)

For VOUT_SCALE_LOOP = 0.25, mantissa = 001h. ($1 \times 2^{-2} = 0.25$)

7.6.16 VOUT_MIN (2Bh)

The VOUT_MIN command sets the minimum output voltage. The purpose is to protect the devices on the output rail supplied by this device from a lower than acceptable output voltage. VOUT_MIN imposes a lower bound to any attempt to program the output voltage to a VOUT_EQUIV setting by changing any of the following registers:

- VOUT_COMMAND
- VOUT_MAX
- VOUT_MIN
- OPERATION[5]
- OPERATION[4]
- VREF_TRIM
- STEP_VREF_MARGIN_HIGH
- STEP_VREF_MARGIN_LOW
- VOUT_SCALE_LOOP

The exponent is set be VOUT_MODE at –9 (equivalent of 1.953 mV/count). Use Equation 8 to calculate the programmed output voltage.

$$\text{MINIMUM VOUT allowed} = \text{VOUT_MIN} \times \text{VOUT_MODE (V)} = \text{VOUT_MIN} \times 2^{-9} \text{ (V)} \quad (8)$$

The range of valid VOUT_MIN values is dependent upon the configured (29h) VOUT_SCALE_LOOP as shown in Equation 9.

$$\text{MINIMUM VOUT allowed} = \text{VOUT_MIN} \times \text{VOUT_SCALE_LOOP} \times \text{VOUT_MODE (V)} = \text{VOUT_MIN} \times \text{VOUT_SCALE_LOOP} \times 2^{-9} \text{ (V)} \quad (9)$$

Copyright © 2016, Texas Instruments Incorporated

If, while the output voltage is turned on, any attempt is made to program: (1) VOUT_EQUIV to be less than VOUT_MIN, the device will:

- Clamp the internal reference voltage to VOUT_MIN × VOUT_SCALE_LOOP × VOUT_MODE value. In the event VOUT_MAX < VOUT_MIN, VOUT_MAX shall dominate.
- Sets the OTH (other) bit in the STATUS_BYTE
- Sets the VFW bit in the STATUS_WORD
- Sets the VOUT_MAX_MIN_Warning bit in the STATUS_VOUTregister
- Notifies the host through the SMBALERT pin

For loop slave device, this command cannot be accessed. Any writes to this command will be ignored. An attempt to read or write this command will result in a NACK'd command, the reporting of an IVC fault, and triggering of SMB_ALERT.

COMMAND	VOUT_MIN															
Format	Linear, unsigned binary															
Bit Position	7	6	5	4	3	2	1	0	7	6	5	4	3	2	1	0
Access	r	r	r	r	r/w	r/w	r/w	r/w	r/w	r/w	r/w	r/w	r/w	r/w	r/w	r/w
Function	Mantissa															

7.6.16.1 Exponent

Value fixed at 10111, Exponent for Linear mode values is –9 (equivalent of 1.95 mV/count, specified in VOUT_MODE command).

7.6.16.2 Mantissa

The range of valid VOUT_MIN values is dependent upon the configured (29h) VOUT_SCALE_LOOP as follows.

If VOUT_SCALE_LOOP = 1:

- default: 0000 0000 1011 0011 (binary) 179 (decimal) (equivalent VOUT_MIN = 0.35 V)
- Minimum: 0000 0000 1011 0011 (binary) 179 (decimal) (equivalent VOUT_MIN = 0.35 V)
- Maximum: 0000 0011 0000 0000 (binary) 768 (decimal) (equivalent VOUT_MIN = 1.5 V)

If VOUT_SCALE_LOOP = 0.5:

- default: 0000 0001 0110 0110 (binary) 358 (decimal) (equivalent VOUT_MIN = 0.7 V)
- Minimum: 0000 0001 0110 0110 (binary) 358 (decimal) (equivalent VOUT_MIN = 0.7 V)
- Maximum: 0000 0110 0000 0000 (binary) 1536 (decimal) (equivalent VOUT_MIN = 3 V)

If VOUT_SCALE_LOOP = 0.25:

- default: 0000 0010 1100 1100 (binary) 716 (decimal) (equivalent VOUT_MIN = 1.4 V)
- Minimum: 0000 0010 1100 1100 (binary) 716 (decimal) (equivalent VOUT_MIN = 1.4 V)
- Maximum: 0000 1100 0000 0000 (binary) 3072 (decimal) (equivalent VOUT_MIN = 6 V)

7.6.17 VIN_ON (35h)

The VIN_ON command sets the value of the input voltage at which the unit should start operation assuming all other required startup conditions are met. Values are mapped to the nearest supported increment. Values outside the supported range are treated as invalid data and cause the device set the CML bit in the STATUS_BYTE and the invalid data (ivd) bit in the STATUS_CML registers, and trigger SMBALERT signal. The value of VIN_ON remains unchanged on an out-of-range write attempt. The contents of this register can be stored to nonvolatile memory using the STORE_DEFAULT_ALL command.

Copyright © 2016, Texas Instruments Incorporated

The supported VIN_ON values are shown in Table 6:

Table 6. Supported VIN_ON Values

VIN_ON Values (V)				
4.25	4.5 (default)	4.75	5	5.25
5.5	5.75	6	6.25	6.5
6.75	7	7.25	7.5	7.75

VIN_ON must be set higher than VIN_OFF. Attempting to write either VIN_ON lower than VIN_OFF or VIN_OFF higher than VIN_ON results in the new value being rejected, SMBALERT signal being asserted along with the CML bit in STATUS_BYTE and the invalid data bit in STATUS_CML.

The data word that accompanies this command is divided into a fixed 5-bit exponent and an 11-bit mantissa. The four most significant bits of the mantissa are fixed, while the lower 4 bits may be altered.

COMMAND	VIN_ON															
Format	Linear, two's complement binary															
Bit Position	7	6	5	4	3	2	1	0	7	6	5	4	3	2	1	0
Access	r	r	r	r	r	r	r	r	r	r	r	r	r/w^{E}	r/w^{E}	r/w^{E}	r/w^{E}
Function	Exponent					Mantissa										
Default Value	1	1	1	1	0	0	0	0	0	0	0	1	0	0	1	0

7.6.17.1 Exponent

default: 11110 (binary) –2 (decimal) (equivalent LSB = 0.25 V)

These default settings are not programmable.

7.6.17.2 Mantissa

default: 000 0001 0010 (binary) 18 (decimal) (equivalent VIN_ON voltage = 4.5 V)

Minimum: 000 0001 0001 (binary) 17 (decimal) (equivalent VIN_ON voltage = 4.25 V)

Maximum: 000 0001 1111 (binary) 31 (decimal) (equivalent VIN_ON voltage = 7.75 V)

7.6.18 VIN_OFF (36h)

The VIN_OFF command sets the value of the input voltage at which the unit should stop operation. Values are mapped to the nearest supported increment. Values outside the supported range is treated as invalid data and causes the device to set the CML bit in the STATUS_BYTE and the invalid data (ivd) bit in the STATUS_CML registers, and trigger SMBALERT signal. The value of VIN_OFF remains unchanged during an out-of-range write attempt. The contents of this register can be stored to nonvolatile memory using the STORE_DEFAULT_ALL command.

The supported VIN_OFF values are shown in Table 7:

Table 7. Supported VIN_OFF Values

VIN_OFF Values (V)				
4 (default)	4.25	4.5	4.75	5
5.25	5.5	5.75	6	6.25
6.5	6.75	7	7.25	7.5

VIN_ON must be set higher than VIN_OFF. Attempting to write either VIN_ON lower than VIN_OFF or VIN_OFF higher than VIN_ON results in the new value being rejected, SMBALERT being asserted along with the cml bit in STATUS_BYTE and the invalid data bit in STATUS_CML.

The data word that accompanies this command is divided into a fixed 5 bit exponent and an 11 bit mantissa. The 4 most significant bits of the mantissa are fixed, while the lower 7 bits may be altered.

Copyright © 2016, Texas Instruments Incorporated

COMMAND	VIN_OFF															
Format	Linear, two's complement binary															
Bit Position	7	6	5	4	3	2	1	0	7	6	5	4	3	2	1	0
Access	r	r	r	r	r	r	r	r	r	r	r	r	r/w^E	r/w^E	r/w^E	r/w^E
Function	Exponent					Mantissa										
Default Value	1	1	1	1	0	0	0	0	0	0	0	1	0	0	0	0

7.6.18.1 Exponent

default: 11110 (binary) –2 (decimal) (equivalent LSB = 0.25 V)

These default settings are not programmable.

7.6.18.2 Mantissa

default: 000 0001 0000 (binary) 16 (decimal) (equivalent VIN_OFF voltage = 4 V)

Minimum: 000 0001 0000 (binary) 16 (decimal) (equivalent VIN_OFF voltage = 4 V)

Maximum: 000 0001 1110 (binary) 30 (decimal) (equivalent VIN_OFF voltage = 7.5 V)

7.6.19 IOUT_CAL_OFFSET (39h)

The IOUT_CAL_OFFSET command is used to compensate for offset errors in the READ_IOUT results and the IOUT_OC_FAULT_LIMIT and IOUT_OC_WARN_LIMIT thresholds. The units are amperes. The default setting is 0 A. The resolution of the argument for this command is 62.5 mA and the range is +3.9375 A to –4 A. Values written outside of this range alias into the supported range. This occurs because the read-only bits are fixed. The exponent is always –4 and the 5 MSB bits of the Mantissa are always equal to the sign bit. The contents of this register can be stored to nonvolatile memory using the STORE_DEFAULT_ALL command.

COMMAND	IOUT_CAL_OFFSET															
Format	Linear, two's complement binary															
Bit Position	7	6	5	4	3	2	1	0	7	6	5	4	3	2	1	0
Access	r	r	r	r	r	r/w^E	r	r	r	r	r/w^E	r/w^E	r/w^E	r/w^E	r/w^E	r/w^E
Function	Exponent					Mantissa										
Default Value	1	1	1	0	0	0	0	0	0	0	0	0	0	0	0	0

7.6.19.1 Exponent

default: 11100 (binary) –4 (decimal) (LSB = 62.5 mA)

These default settings are not programmable.

7.6.19.2 Mantissa

MSB is programmable with sign, next 4 bits are sign extend only.
Lower six bits are programmable with a default value of 0 (decimal).

7.6.20 VOUT_OV_FAULT_RESPONSE (41h)

The VOUT_OV_FAULT_RESPONSE command instructs the device on what action to take in response to an Output Over Voltage Fault based on MFR_SPECIFIC_07 (PCT_OV_UV_WRN_FLT_LIMITS). The device also:

- Sets the OVF bit in the STATUS_BYTE
- Sets the VFW bit in the STATUS_WORD
- Sets the OVF bit in the STATUS_VOUT register, and
- Notifies the host by asserting $\overline{\text{SMBALERT}}$

For loop slave device, this command cannot be accessed. Any writes to this command will be ignored. An attempt to read or write this command will result in a NACK'd command, the reporting of an IVC fault, and triggering of SMB_ALERT.

The contents of this register can be stored to nonvolatile memory using the STORE_DEFAULT_ALL command.

Copyright © 2016, Texas Instruments Incorporated

The default response to a output overvoltage fault is to shut down and restart with 7 × TON_RISE time delay.

COMMAND	VOUT_OV_FAULT_RESPONSE							
Format	Unsigned binary							
Bit Position	7	6	5	4	3	2	1	0
Access	r/w^E	r	r/w^E	r/w	r/w	r	r	r
Function	RSP[1]	0	RS[2]	RS[1]	RS[0]	TD[2]	TD[1]	TD[0]
Default Value	1	0	1	1	1	1	1	1

7.6.20.1 RSP[1] Bit

This bit sets the output voltage overvoltage response to either ignore or not. The default for this bit is 1.

BIT VALUE	ACTION
0	The PMBus device continues operation without interruption. Note: In this *ignore* fault response mode, the associated fault status bits is set. Additionally, SMBALERT remains triggered if it is not masked.
1	The PMBus device shuts down and restarts according to RS[2:0].

7.6.20.2 RS[2:0] Bits

These bits are output voltage overvoltage retry setting. The default for this bit is 111b.

BIT VALUE	ACTION
000	A zero value for the retry setting means that the unit does not attempt to restart. The output remains disabled until the fault is cleared (Refer to section 10.7 of the PMBus specification)
111	A one value for the retry setting means that the unit goes through a normal startup (Soft start) continuously, without limitation, until it is commanded off or bias power is removed or another fault condition causes the unit to shutdown.

Any value other than 000 or 111 is not accepted. Attempting to write any other value is rejected, causing the device to assert SMBALERT along with the CML bit in STATUS_BYTE and the invalid data bit in STATUS_CML. Note: because all 3 bits must be the same, only one (bit 5) is stored in EEPROM.

7.6.20.3 TD[2:0] Bits

These bits are output voltage overvoltage retry time delay retting. The default for this bit is 111b.

BIT VALUE	ACTION
000	A zero value for the retry time delay setting means that the unit does not attempt to delay a restart. This is only supported when Restart is disabled by RS[2:0] = 000. The output remains disabled until the fault is cleared (Refer to section 10.7 of the PMBus specification)
111	A one value for the retry time delay setting means that the unit waits 7 TON_RISE times before it goes through a normal startup (Soft start). This is only supported when Restart is enabled by RS[2:0] = 111.

These bits are direct reflections of the RS[2] (bit 5) value in this register.

7.6.21 VOUT_UV_FAULT_RESPONSE (45h)

The VOUT_UV_FAULT_RESPONSE command instructs the device on what action to take in response to an Output Under Voltage Fault based on MFR_SPECIFIC_07 (PCT_OV_UV_WRN_FLT_LIMITS). The device also:

- Sets the oth bit in the STATUS_BYTE
- Sets the VFW bit in the STATUS_WORD
- Sets the UVF bit in the STATUS_VOUT register, and
- Notifies the host by asserting SMBALERT

For loop slave device, this command cannot be accessed. Any writes to this command will be ignored. An attempt to read or write this command will result in a NACK'd command, the reporting of an IVC fault, and triggering of SMB_ALERT.

Copyright © 2016, Texas Instruments Incorporated

The contents of this register can be stored to nonvolatile memory using the STORE_DEFAULT_ALL command.

The default response to a output undervoltage fault is to shut down and restart with 7 × TON_RISE time delay.

COMMAND	VOUT_UV_FAULT_RESPONSE							
Format	Unsigned binary							
Bit Position	7	6	5	4	3	2	1	0
Access	r/w^E	r	r/w^E	r/w	r/w	r	r	r
Function	RSP[1]	0	RS[2]	RS[1]	RS[0]	TD[2]	TD[1]	TD[0]
Default Value	1	0	1	1	1	1	1	1

7.6.21.1 RSP[1] Bit

This bit sets the output voltage undervoltage response to either ignore or not. The default for this bit is 1.

BIT VALUE	ACTION
0	The PMBus device continues operation without interruption. Note: In this *ignore* fault response mode, the associated fault status bits are set. Additionally, SMBALERT continues to be triggered if it is not masked.
1	The PMBus device shuts down and restarts according to RS[2:0].

7.6.21.2 RS[2:0] Bits

These bits are output voltage undervoltage retry setting. The default for this bit is 111b.

BIT VALUE	ACTION
000	A zero value for the retry setting means that the unit does not attempt to restart. The output remains disabled until the fault is cleared (Refer to section 10.7 of the PMBus specification)
111	A one value for the retry setting means that the unit goes through a normal startup (soft start) continuously, without limitation, until it is commanded off or bias power is removed or another fault condition causes the unit to shutdown.

Any value other than 000 or 111 is not accepted. Attempting to write any other value is rejected, causing the device to assert SMBALERT along with the CML bit in STATUS_BYTE and the invalid data bit in STATUS_CML. Because all 3 bits must be the same, only one (bit 5) is stored in EEPROM.

7.6.21.3 TD[2:0] Bits

These bits are output voltage undervoltage retry time delay retting. The default for this bit is 111b.

BIT VALUE	ACTION
000	A zero value for the retry time delay setting means that the unit does not attempt to delay a restart. This is only supported when Restart is disabled by RS[2:0] = 000. The output remains disabled until the fault is cleared (Refer to section 10.7 of the PMBus specification)
111	A one value for the retry time delay setting means that the unit waits 7 TON_RISE times before it goes through a normal startup (Soft start). This is only supported when Restart is enabled by RS[2:0] = 111.

These bits are direct reflections of the RS[2] (bit 5) value in this register.

7.6.22 IOUT_OC_FAULT_LIMIT (46h)

The IOUT_OC_FAULT_LIMIT command sets the value of the output current, in amperes, that causes the overcurrent detector to indicate an overcurrent fault condition. The IOUT_OC_FAULT_LIMIT should be set equal to or greater than the IOUT_OC_WARN_LIMIT. Writing a value to IOUT_OC_FAULT_LIMIT less than IOUT_OC_WARN_LIMIT causes the device to set the CML bit in the STATUS_BYTE and the invalid data (ivd) bit in the STATUS_CML registers as well as assert the SMBALERT signal. The contents of this register can be stored to nonvolatile memory using the STORE_DEFAULT_ALL command. Since 2-LSBs are not stored in EEPROM, on STORE, always round up. If IOUT_OC_FAULT_LIMIT [1:0] > 0, add 1 to IOUT_OC_FAULT_LIMIT [6:2]

Copyright © 2016, Texas Instruments Incorporated

The IOUT_OC_FAULT_LIMIT takes a two-byte data word formatted as shown below:

COMMAND	IOUT_OC_FAULT_LIMIT															
Format	Linear, two's complement binary															
Bit Position	7	6	5	4	3	2	1	0	7	6	5	4	3	2	1	0
Access	r	r	r	r	r	r	r	r	r	r/w^E	r/w^E	r/w^E	r/w^E	r/w^E	r/w	r/w
Function	Exponent					Mantissa										
Default Value	See Below															

7.6.22.1 Exponent

default: 11111 (binary) –1 (decimal) (0.5 A)

These default settings are not programmable.

7.6.22.2 Mantissa

The upper four bits are fixed at 0.

The lower seven bits are programmable.

Use Equation 10 to calculate the actual output current for a given mantissa and exponent.

$$I_{OUT(oc)} = \text{Mantissa} \times 2^{\text{Exponent}} = \frac{\text{Mantissa}}{2} \quad (10)$$

The default values and allowable ranges for each device are summarized below:

DEVICE	OC_FAULT_LIMIT			UNIT
	MIN	DEFAULT	MAX	
TPS546C23	5	42	52	A

7.6.23 IOUT_OC_FAULT_RESPONSE (47h)

The IOUT_OC_FAULT_RESPONSE command instructs the device on what action to take in response to an IOUT_OC_FAULT_LIMIT. The device also:

- Sets the OCF bit in the STATUS_BYTE
- Sets the OCFW bit in the STATUS_WORD
- Sets the OCF bit in the STATUS_IOUT register, and
- Notifies the host by asserting $\overline{\text{SMBALERT}}$

The contents of this register can be stored to nonvolatile memory using the STORE_DEFAULT_ALL command.

The default response to an overcurrent fault is to shut down and restart with 7 × TON_RISE time delay.

COMMAND	IOUT_OC_FAULT_RESPONSE							
Format	Unsigned binary							
Bit Position	7	6	5	4	3	2	1	0
Access	r/w^E	r/w	r/w^E	r/w	r/w	r	r	r
Function	RSP[1]	RSP[0]	RS[2]	RS[1]	RS[0]	TD[2]	TD[1]	TD[0]
Default Value	1	1	1	1	1	1	1	1

7.6.23.1 RSP[1:0] Bits

These bits set the overcurrent fault response to either ignore or not. The default for this bit is 11b. Any value other than 00b or 11b will not be accepted, such and attempt will cause the 'cml' bit in the STATUS_BYTE register and the *ivd* bit in the STATUS_CML register to be set, and assert $\overline{\text{SMBALERT}}$. Because both bits must be the same, only one (bit 7) is stored in EEPROM. The default for this bit is 11b.

Copyright © 2016, Texas Instruments Incorporated

BIT VALUE	ACTION
00	The PMBus device continues operation without interruption. Note: In this “ignore” fault response mode, the associated fault status bits are set. Additionally, SMBALERT continues to be triggered if it is not masked.
11	The PMBus device shuts down and restarts according to RS[2:0].

7.6.23.2 RS[2:0] Bits

These bits are overcurrent fault retry setting. The default for this bit is 111b.

BIT VALUE	ACTION
000	A zero value for the retry setting means that the unit does not attempt to restart. The output remains disabled until the fault is cleared (Refer to section 10.7 of the PMBus specification)
111	A one value for the retry setting means that the unit goes through a normal startup (soft-start) continuously, without limitation, until it is commanded off or bias power is removed or another fault condition causes the unit to shutdown.

Any value other than 000 or 111 is not accepted. Attempting to write any other value is rejected, causing the device to assert SMBALERT along with the CML bit in STATUS_BYTE and the invalid data bit in STATUS_CML. Because all 3 bits must be the same, only one (bit 5) is stored in EEPROM.

7.6.23.3 TD[2:0] Bits

These bits are over current retry time delay retting. The default for this bit is 111b.

BIT VALUE	ACTION
000	A zero value for the retry time delay setting means that the unit does not attempt to delay a restart. This is only supported when Restart is disabled by RS[2:0] = 000. The output remains disabled until the fault is cleared (Refer to section 10.7 of the PMBus specification)
111	A one value for the retry time delay setting means that the unit waits 7 TON_RISE times before it goes through a normal startup (Soft start). This is only supported when Restart is enabled by RS[2:0] = 111.

These bits are direct reflections of the RS[2] (bit 5) value in this register.

7.6.24 IOUT_OC_WARN_LIMIT (4Ah)

The IOUT_OC_WARN_LIMIT command sets the value of the output current, in amperes, that causes the overcurrent detector to indicate an overcurrent warning. When this current level is exceeded the device:

- Sets the oth bit in the STATUS_BYTE
- Sets the OCFW bit in the STATUS_WORD
- Sets the OCW bit in the STATUS_IOUT register, and
- Notifies the host by asserting SMBALERT

The IOUT_OC_WARN_LIMIT threshold should always be set to less than or equal to the IOUT_OC_FAULT_LIMIT. Writing a value to IOUT_OC_WARN_LIMIT greater than IOUT_OC_FAULT_LIMIT causes the device to set the CML bit in the STATUS_BYTE and the invalid data (ivd) bit in the STATUS_CML registers as well as assert the SMBALERT signal. In such case, the register content will remain unchanged. This behavior can be overridden by the user setting Data Limit Override (DLO) in MFR_SPECIFIC_21[4].

The default IOUT_OC_WARN_LIMIT is always set to relative to 87.5% of the OCF value. Because the IOUT_OC_WARN_LIMIT is not stored in EEPROM, the IOUT_OC_WARN_LIMIT register is set to 12.5% less than the stored OCF threshold upon any RESTORE from EEPROM (reset_restore, or RESTORE_DEFAULT_ALL command). The digital math to achieve this is: OCW_default = (OCF – OCF/8).

Copyright © 2016, Texas Instruments Incorporated

The IOUT_OC_WARN_LIMIT takes a two byte data word formatted as shown below:

COMMAND	IOUT_OC_WARN_LIMIT															
Format	Linear, two's complement binary															
Bit Position	7	6	5	4	3	2	1	0	7	6	5	4	3	2	1	0
Access	r	r	r	r	r	r	r	r	r	r/w	r/w	r/w	r/w	r/w	r/w	r/w
Function	Exponent					Mantissa										
Default Value	See Below															

7.6.24.1 Exponent

default: 11111 (binary) –1 (decimal) (0.5 A)

These default settings are not programmable.

7.6.24.2 Mantissa

The upper four bits are fixed at 0.

Lower seven bits are programmable.

The actual output warning current level for a given mantissa and exponent is:

$$I_{OUT\,(OCW)} = \text{Mantissa} \times 2^{\text{Exponent}} = \frac{\text{Mantissa}}{2} \tag{11}$$

The default values and allowable ranges for each device are summarized below:

DEVICE	OC_WARN_LIMIT			UNIT
	MIN	DEFAULT	MAX	
TPS546C23	4	37	50	A

7.6.25 OT_FAULT_LIMIT (4Fh)

The OT_FAULT_LIMIT command sets the value of the temperature, in degrees Celsius, that causes an overtemperature fault condition, when the sensed temperature from the external sensor exceeds this limit.

The OT_FAULT_LIMIT must always be greater than the OT_WARN_LIMIT. Writing a value to OT_FAULT_LIMIT less than or equal to OT_WARN_LIMIT causes the device to set the CML bit in the STATUS_BYTE and the invalid data (ivd) bit in the STATUS_CML registers as well as asserts the SMBALERT signal. The contents of this register can be stored to nonvolatile memory using the STORE_DEFAULT_ALL command.

The OT_FAULT_LIMIT takes a two byte data word formatted as shown below.

COMMAND	OT_FAULT_LIMIT															
Format	Linear, two's complement binary															
Bit Position	7	6	5	4	3	2	1	0	7	6	5	4	3	2	1	0
Access	r	r	r	r	r	r	r	r	r/w^E	r/w^E	r/w^E	r/w^E	r/w^E	r/w^E	r/w^E	r/w^E
Function	Exponent					Mantissa										
Default Value	0	0	0	0	0	0	0	0	1	0	0	1	0	0	0	1

7.6.25.1 Exponent

default: 00000 (binary) 0 (decimal) (represents mantissa with steps of 1 degree Celcius)

These default settings are not programmable.

7.6.25.2 Mantissa

default: 000 1001 0001 (binary) 145 (decimal) (145°C)

Minimum: 000 0111 1000 (binary) (equivalent OTF = 120°C)

Maximum: 000 1010 0101 (binary) (equivalent OTF = 165°C)

Copyright © 2016, Texas Instruments Incorporated

7.6.26 OT_FAULT_RESPONSE (50h)

The OT_FAULT_RESPONSE command instructs the device on what action to take in response to an OT_FAULT_LIMIT. The device also:

- Sets the OTFW bit in the STATUS_BYTE
- Sets the OTF bit in the STATUS_TEMPERATURE
- Notifies the host by asserting SMBALERT

When the overtemperature fault is tripped, the fault flag is latched until the external sensed temperature decreases 20°C from the OT_FAULT_LIMIT.

The contents of this register can be stored to nonvolatile memory using the STORE_DEFAULT_ALL command.

The default response to an over temperature fault is to ignore. Fixed Bandgap Detected Overtemperature faults are never ignored. The Bandgap OT faults always respond in a shutdown and attempted restart once the part cools.

COMMAND	OT_FAULT_RESPONSE							
Format	Unsigned binary							
Bit Position	7	6	5	4	3	2	1	0
Access	r/w^{E}	r	r/w^{E}	r/w	r/w	r	r	r
Function	RSP[1]	0	RS[2]	RS[1]	RS[0]	TD[2]	TD[1]	TD[0]
Default Value	0	0	1	1	1	1	1	1

7.6.26.1 RSP[1] Bit

This bit sets the over temperature fault response to either ignore or not. The default for this bit is 0.

BIT VALUE	ACTION
0	The PMBus device continues operation without interruption. Note: In this “ignore” fault response mode, the associated fault status bits are set. Additionally, SMBALERT continues to be triggered if it is not masked.
1	The PMBus device shuts down and restarts according to RS[2:0].

7.6.26.2 RS[2:0] Bits

These bits are over temperature fault retry setting. The default for this bit is 111b.

BIT VALUE	ACTION
000	A zero value for the Retry Setting means that the unit does not attempt to restart. The output remains disabled until the fault is cleared (Refer to section 10.7 of the PMBus specification)
111	A one value for the Retry Setting means that the unit goes through a normal startup (Soft start) continuously, without limitation, until it is commanded off or bias power is removed or another fault condition causes the unit to shutdown.

Any value other than 000 or 111 is not accepted. Attempting to write any other value is rejected, causing the device to assert SMBALERT along with the CML bit in STATUS_BYTE and the invalid data bit in STATUS_CML. Because all 3 bits must be the same, only one (bit 5) is stored in EEPROM.

NOTE

The programmed response here is also applied to the bandgap-detected overtemperture (OT) faults with the one exception of the *ignore* response. The fixed Bandgap-detected overtemperature faults are never ignored. The bandgap OT faults always respond in a shutdown and attempted restart when the part cools.

7.6.26.3 TD[2:0] Bits

These bits are overtemperature fault retry time delay retting. The default for this bit is 111b.

Copyright © 2016, Texas Instruments Incorporated

BIT VALUE	ACTION
000	A zero value for the retry time delay setting means that the unit does not attempt to delay a restart. This is only supported when restart is disabled by RS[2:0] = 000. The output remains disabled until the fault is cleared (Refer to section 10.7 of the PMBus specification)
111	A one value for the retry time delay setting means that the unit waits 7 TON_RISE times before it goes through a normal startup (soft start). This is only supported when restart is enabled by RS[2:0] = 111.

These bits are direct reflections of the RS[2] (bit 5) value in this register.

7.6.27 OT_WARN_LIMIT (51h)

The OT_WARN_LIMIT command sets the value of the temperature, in degrees Celsius, that causes an overtemperature warning condition, when the sensed temperature from the external sensor exceeds this limit. Upon triggering the overtemperature warning, the device takes the following actions:

- Sets the TEMPERATURE bit in the STATUS_BYTE
- Sets the OT Warning bit in the STATUS_TEMPERATURE
- Notifies the host by asserting $\overline{\text{SMBALERT}}$

Once the overtemperature warning is tripped, the warning flag is latched until the external sensed temperature decreases 20°C from the OT_WARN_LIMIT.

The OT_WARN_LIMIT must always be less than the OT_FAULT_LIMIT. Writing a value to OT_WARN_LIMIT greater than or equal to OT_FAULT_LIMIT causes the device to set the CML bit in the STATUS_BYTE and the invalid data (ivd) bit in the STATUS_CML registers as well as assert the $\overline{\text{SMBALERT}}$ signal. In such case, the register content will remain unchanged. This behavior can be overridden by the user setting Data Limit Override (DLO) in MFR_SPECIFIC_21[4].

The default OT_WARN_LIMIT is mathematically derived from the EEPROM backed OTF limit by subtracting 25 from (4Fh) OT_FAULT_LIMIT to reach the default OT_WARN_LIMIT. If the calculated OTW is less than 100°C, then the default value is set to 100°C. OTW=max(OTF-25, 100)

The OT_WARN_LIMIT takes a two byte data word formatted as shown below:

COMMAND	OT_WARN_LIMIT															
Format	Unsigned binary															
Bit Position	7	6	5	4	3	2	1	0	7	6	5	4	3	2	1	0
Access	r	r	r	r	r	r	r	r	r/w	r/w	r/w	r/w	r/w	r/w	r/w	r/w
Function	Exponent					Mantissa										
Default Value	0	0	0	0	0	0	0	0	0	1	1	1	1	0	0	0

7.6.27.1 Exponent

default: 00000 (binary) 0 (decimal) (represents mantissa with steps of 1 degree Celcius)

These default settings are not programmable.

7.6.27.2 Mantissa

default: 000 0111 1000 (binary) 120 (decimal) (120°C) 25°C less than default OTF

Minimum: 000 0110 0100 (binary) (equivalent OTF = 100°C)

Maximum: 000 1000 1100 (binary) (equivalent OTF = 140°C)

7.6.28 TON_DELAY (60h)

The TON_DELAY command sets the time in milliseconds, from when a start condition is received to when the output voltage starts to rise. The contents of this register can be stored to nonvolatile memory using the STORE_DEFAULT_ALL command.

For loop slave device, this command cannot be accessed. Any writes to this command will be ignored. An attempt to read or write this command will result in a NACK'd command, the reporting of an IVC fault, and triggering of SMB_ALERT.

Copyright © 2016, Texas Instruments Incorporated

The TON_DELAY command is formatted as a linear mode two's complement binary integer.

COMMAND	TON_DELAY															
Format	Linear, two's complement binary															
Bit Position	7	6	5	4	3	2	1	0	7	6	5	4	3	2	1	0
Access	r	r	r	r	r	r	r	r	r	r/w^{E}	r/w^{E}	r/w^{E}	r/w^{E}	r/w^{E}	r/w^{E}	r/w^{E}
Function	Exponent					Mantissa										
Default Value	0	0	0	0	0	0	0	0	0	0	0	0	0	0	0	0

7.6.28.1 Exponent

default: 00000 (binary) 0 (decimal) (1 millisecond)

These default settings are not programmable.

7.6.28.2 Mantissa

The upper four bits are fixed at 0. The lower seven bits are programmable with a default value of 000 0000 0000 (binary) (0 ms).

Only 16 fixed TON_DELAY times are available in the device. As such, the range of programmed TON_DELAY settings are sub-divided into 16 *buckets* that then selects one of the 16 supported times. Programmed values are rounded to the nearest *bucket/transition rate* as outlined in the table Supported TON_DELAY Values:

Table 8. Supported TON_DELAY Values

EFFECTIVE TON_DELAY (ms)	PROGRAMMED TON_DELAY MANTISSA (decimal)	
	Greater than	Less than or equal to
0 (50 us)	—	0
1	0	1
2	1	2
3	2	3
4	3	4
5	4	5
6	5	6
7	6	9
10	9	12
14	12	17
19	17	22
27	22	32
37	32	44
52	44	62
72	62	86
100	86	—

7.6.29 TON_RISE (61h)

The TON_RISE command sets the time in milliseconds, from when the reference starts to rise until the voltage has entered the regulation band. The contents of this register can be stored to nonvolatile memory using the STORE_DEFAULT_ALL command.

For loop slave device, this command cannot be accessed. Any writes to this command will be ignored. An attempt to read or write this command will result in a NACK'd command, the reporting of an IVC fault, and triggering of SMB_ALERT.

Programming a value of 0 instructs the unit to bring its output voltage to the programmed regulation value as quickly as possible. For the TPS546C23 device, this results in an effective TON_RISE time of 1ms (fastest time supported).

Copyright © 2016, Texas Instruments Incorporated

The TON_RISE command is formatted as a linear mode two's complement binary integer.

COMMAND	TON_RISE															
Format	Linear, two's complement binary															
Bit Position	7	6	5	4	3	2	1	0	7	6	5	4	3	2	1	0
Access	r	r	r	r	r	r	r	r	r	r/w^E	r/w^E	r/w^E	r/w^E	r/w^E	r/w^E	r/w^E
Function	Exponent					Mantissa										
Default Value	0	0	0	0	0	0	0	0	0	0	0	0	0	0	1	1

7.6.29.1 Exponent

default: 00000 (binary) 0 (decimal) (1 millisecond)

These default settings are not programmable.

7.6.29.2 Mantissa

The upper four bits are fixed at 0. The lower seven bits are programmable with a default value of 000 0000 0011 (binary) (3 ms). For PWM loop slave device, the effective TON_RISE time is locked at 100 ms.

The supported TON_RISE times over PMBus are shown in Table 9:

Table 9. Supported TON_RISE Values

Effective TON_RISE (ms)	Programmed TON_RISE Mantissa (d)	
	Greater than	Less than or equal to
1	—	1
2	1	2
3	2	3
4	3	4
5	4	5
6	5	6
7	6	9
10	9	12
14	12	17
19	17	22
27	22	32
37	32	44
52	44	62
72	62	86
100	86	—

7.6.30 TON_MAX_FAULT_LIMIT (62h)

The TON_MAX_FAULT_LIMIT command sets an UPPER limt in milliseconds, on how long the unit can attempt to power up the output without reaching the output undervoltage fault limit. The time begins counting as soon as the device enters the soft-start state begins to ramp the output. In other words, the TON_MAX_FAULT_LIMIT timer starts at the beginning of the TON_RISE state.

For loop slave device, this command cannot be accessed. Any writes to this command will be ignored. An attempt to read or write this command will result in a NACK'd command, the reporting of an IVC fault, and triggering of SMB_ALERT.

When TON_MAX_FAULT_LIMIT is set to 0, the TON_MAX_FAULT timer is disabled, which means that there is no limit and that the unit can attempt to bring up the output voltage indefinitely.

The device does not prohibit setting TON_MAX_FAULT_LIMIT < TON_RISE, however, in this configuration, the device will trigger a TON_MAX_FAULT if the VOUT has not risen above the UVF threshold by 4 seconds after the TON_DELAY and TON_RISE times expire.

Copyright © 2016, Texas Instruments Incorporated

The TON_MAX_FAULT_LIMIT command is formatted as a linear mode two's complement binary integer.

COMMAND	TON_MAX_FAULT_LIMIT															
Format	Linear, two's complement binary															
Bit Position	7	6	5	4	3	2	1	0	7	6	5	4	3	2	1	0
Access	r	r	r	r	r	r	r	r	r	r/w	r/w	r/w	r/w	r/w	r/w	r/w
Function	Exponent					Mantissa										
Default Value	0	0	0	0	0	0	0	0	0	0	0	0	0	0	0	0

7.6.30.1 Exponent

default: 00000 (binary) 0 (decimal) (Disable)

These default settings are not programmable.

7.6.30.2 Mantissa

The upper four bits are fixed at 0.

This register is not EEPROM backed, a RESTORE_DEFAULT_ALL command causes the TON_MAX_FAULT_LIMIT to restore to the default 0 ms value.

The supported TON_MAX_FAULT_LIMIT times over PMBus are shown in Supported TON_MAX_FAULT_LIMIT Values:

Table 10. Supported TON_MAX_FAULT_LIMIT Values

Effective TON_MAX_FAULT_LIMIT (ms)	Programmed TON_MAX_FAULT_LIMIT Mantissa (d)	
	Greater than	Less than or equal to
No Limit (timer disabled)	—	0
1	0	1
2	1	2
3	2	3
4	3	4
5	4	5
6	5	6
7	6	9
10	9	12
14	12	17
19	17	22
27	22	32
37	32	44
52	44	62
72	62	86
100	86	—

Copyright © 2016, Texas Instruments Incorporated

7.6.31 TON_MAX_FAULT_RESPONSE (63h)

The TON_MAX_FAULT_RESPONSE command instructs the device on what action to take in response to an TON_MAX_FAULT_LIMIT.

The device also:

- Sets the oth bit in the STATUS_BYTE
- Sets the VFW bit in the STATUS_WORD
- Sets the TONMAXF bit in the STATUS_VOUT register, and
- Notifies the host by asserting SMBALERT

For loop slave device, this command cannot be accessed. Any writes to this command will be ignored. An attempt to read or write this command will result in a NACK'd command, the reporting of an IVC fault, and triggering of SMB_ALERT.

The contents of this register can be stored to nonvolatile memory using the STORE_DEFAULT_ALL command.

The default response to a TON_MAX_FAULT is to shut down and restart with 7 × TON_RISE time delay.

COMMAND	TON_MAX_FAULT_RESPONSE							
Format	Unsigned binary							
Bit Position	7	6	5	4	3	2	1	0
Access	r/w^E	r	r/w^E	r/w	r/w	r	r	r
Function	RSP[1]	0	RS[2]	RS[1]	RS[0]	TD[2]	TD[1]	TD[0]
Default Value	1	0	1	1	1	1	1	1

7.6.31.1 RSP[1] Bit

This bit sets the TON_MAX_FAULT response to either ignore or not. The default for this bit is 1.

BIT VALUE	ACTION
0	The PMBus device continues operation without interruption. Note: In this *ignore* fault response mode, the associated fault status bits are set. Additionally, SMBALERT continues to be triggered if it is not masked.
1	The PMBus device shuts down and restarts according to RS[2:0].

7.6.31.2 RS[2:0] Bits

These bits are TON_MAX_FAULT retry setting. The default for this bit is 111b.

BIT VALUE	ACTION
000	A zero value for the retry setting means that the unit does not attempt to restart. The output remains disabled until the fault is cleared (Refer to section 10.7 of the PMBus specification)
111	A one value for the retry setting means that the unit goes through a normal startup (soft start) continuously, without limitation, until it is commanded off or bias power is removed or another fault condition causes the unit to shutdown.

Any value other than 000 or 111 is not accepted. Attempting to write any other value is rejected, causing the device to assert SMBALERT along with the CML bit in STATUS_BYTE and the invalid data bit in STATUS_CML. Because all 3 bits must be the same, only one (bit 5) is stored in EEPROM.

7.6.31.3 TD[2:0] Bits

These bits are TON_MAX_FAULT retry time delay retting. The default for this bit is 111b.

BIT VALUE	ACTION
000	A zero value for the retry time delay setting means that the unit does not attempt to delay a restart. This is only supported when restart is disabled by RS[2:0] = 000. The output remains disabled until the fault is cleared (Refer to section 10.7 of the PMBus specification)

Copyright © 2016, Texas Instruments Incorporated

BIT VALUE	ACTION
111	A one value for the retry time delay setting means that the unit waits 7 TON_RISE times before it goes through a normal startup (soft start). This is only supported when restart is enabled by RS[2:0] = 111.

These bits are direct reflections of the RS[2] (bit 5) value in this register.

7.6.32 TOFF_DELAY (64h)

The TOFF_DELAY command sets the time in milliseconds, from when a stop condition is received and when the output voltage starts to fall. The contents of this register can be stored to nonvolatile memory using the STORE_DEFAULT_ALL command.

For loop slave device, this command cannot be accessed. Any writes to this command will be ignored. An attempt to read or write this command will result in a NACK'd command, the reporting of an IVC fault, and triggering of SMB_ALERT.

The TOFF_DELAY command is formatted as a linear mode two's complement binary integer.

COMMAND	TOFF_DELAY															
Format	Linear, two's complement binary															
Bit Position	7	6	5	4	3	2	1	0	7	6	5	4	3	2	1	0
Access	r	r	r	r	r	r	r	r	r	r/w^{E}	r/w^{E}	r/w^{E}	r/w^{E}	r/w^{E}	r/w^{E}	r/w^{E}
Function	Exponent					Mantissa										
Default Value	0	0	0	0	0	0	0	0	0	0	0	0	0	0	0	0

7.6.32.1 Exponent

default: 00000 (binary) 0 (decimal) (1 millisecond)

These default settings are not programmable.

7.6.32.2 Mantissa

The upper four bits are fixed at 0. The lower seven bits are programmable with a default value of 000 0000 0000 (binary) (0 ms).

Only 16 fixed TOFF_DELAY times are available in the device. As such, the range of programmed TOFF_DELAY settings are sub-divided into 16 *buckets* that then selects one of the 16 supported times. Programmed values are rounded to the nearest *bucket/transition rate* as outlined in the table Supported TOFF_DELAY Values:

Table 11. Supported TOFF_DELAY Values

EFFECTIVE TOFF_DELAY (ms)	PROGRAMMED TOFF_DELAY MANTISSA (decimal)	
	Greater than	Less than or equal to
0	—	0
1	0	1
2	1	2
3	2	3
4	3	4
5	4	5
6	5	6
7	6	9
10	9	12
14	12	17
19	17	22
27	22	32
37	32	44
52	44	62

Copyright © 2016, Texas Instruments Incorporated

Table 11. Supported TOFF_DELAY Values (continued)

EFFECTIVE TOFF_DELAY (ms)	PROGRAMMED TOFF_DELAY MANTISSA (decimal)	
	Greater than	Less than or equal to
72	62	86
100	86	—

7.6.33 TOFF_FALL (65h)

The TOFF_FALL command sets the time in milliseconds, from the end of the TOFF_DELAY time until the voltage reaches 0 V. The contents of this register can be stored to nonvolatile memory using the STORE_DEFAULT_ALL command.

Programming a value of 0 instructs the unit to bring its output voltage down to 0 as quickly as possible. For the TPS546C23 device, this results in actively ramping down the output voltage in 1 ms (the fastest supported ramp down).

For loop slave device, this command cannot be accessed. Any writes to this command will be ignored. An attempt to read or write this command will result in a NACK'd command, the reporting of an IVC fault, and triggering of SMB_ALERT.

The TOFF_FALL command is formatted as a linear mode two's complement binary integer.

COMMAND	TOFF_FALL															
Format	Linear, two's complement binary															
Bit Position	7	6	5	4	3	2	1	0	7	6	5	4	3	2	1	0
Access	r	r	r	r	r	r	r	r	r	r/w^{E}	r/w^{E}	r/w^{E}	r/w^{E}	r/w^{E}	r/w^{E}	r/w^{E}
Function	Exponent					Mantissa										
Default Value	0	0	0	0	0	0	0	0	0	0	0	0	0	0	0	0

7.6.33.1 Exponent

default: 00000 (binary) 0 (decimal) (1 millisecond)

These default settings are not programmable.

7.6.33.2 Mantissa

The upper four bits are fixed at 0. The lower seven bits are programmable with a default value of 000 0000 0000 (binary) (0 ms).

The supported TOFF_FALL times over PMBus are shown in Supported TOFF_FALL Values:

Table 12. Supported TOFF_FALL Values

Effective TOFF_FALL (ms)	Programmed TOFF_FALL Mantissa (d)	
	Greater than	Less than or equal to
1	—	1
2	1	2
3	2	3
4	3	4
5	4	5
6	5	6
7	6	9
10	9	12
14	12	17
19	17	22
27	22	32
37	32	44
52	44	62

Copyright © 2016, Texas Instruments Incorporated

Table 12. Supported TOFF_FALL Values (continued)

Effective TOFF_FALL (ms)	Programmed TOFF_FALL Mantissa (d)	
	Greater than	Less than or equal to
72	62	86
100	86	—

7.6.34 STATUS_BYTE (78h)

The STATUS_BYTE command returns one byte of information with a summary of the most critical device faults.

COMMAND	STATUS_BYTE							
Format	Unsigned binary							
Bit Position	7	6	5	4	3	2	1	0
Access	r	r	r	r	r	r	r	r
Function	X	OFF	OVF	OCF	X	OTFW	CML	oth
Default Value	0	X	0	0	0	0	0	1

A 1 in any of these bit positions indicates that:

OFF The device is not providing power to the output, regardless of the reason. In this family of devices, this flag means that the converter is not enabled.

OVF An output overvoltage fault has occurred. This bit directly reflects the state of STATUS_VOUT[7] – OVF. If the user wants this fault source to be masked and not trigger SMBALERT, they must do it by masking STATUS_VOUT[7]. Per the PMBus v1.3 spec sections 10.2.4 and 10.2.5, this bit is not clearable through a PMBus write. In contrast, the bit is to be cleared by clearing the bits in STATUS_VOUT that cause this bit to be set. For loop slave device, this bit is 0.

OCF An output overcurrent fault has occurred. This bit directly reflect the state of STATUS_IOUT[7] – OCF. If the user wants this fault sourced to be masked and not trigger SMBALERT, they must do it by masking STATUS_IOUT[7]. Per the PMBus v1.3 spec sections 10.2.4 and 10.2.5, this bit is not clearable through a PMBus write. In contrast, the bit is to be cleared by clearing the bits in STATUS_IOUT that cause this bit to be set.

OTFW A temperature fault or warning has occurred. Check STATUS_TEMPERATURE. Per the PMBus v1.3 spec sections 10.2.4 and 10.2.5, this bit is not clearable through a PMBus write. In contrast, the bit is to be cleared by clearing the bits in STATUS_TEMPERATURE that cause this bit to be set.

CML A communications, memory or logic fault has occurred. Check STATUS_CML. Per the PMBus v1.3 spec sections 10.2.4 and 10.2.5, this bit is not clearable through a PMBus write. In contrast, the bit is to be cleared by clearing the bits in STATUS_CML that cause this bit to be set.

oth A fault or warning not listed through bits 1-7 has occurred, which include an undervoltage fault, over current warning, overvotlge warning, undervoltage warning, TON_MAX_FAULT, LOW_VIN, VOUT_MAX_MIN_Warning, OTF_BG, or IV_PPV1. Check other status registers. Per the PMBus v1.3 spec sections 10.2.4 and 10.2.5, this bit is not clearable through a PMBus write. In contrast, the bit is to be cleared by clearing the bits in STATUS_VOUT, STATUS_IOUT, STATUS_IOUT (7Bh), or STATUS_MFR_SPECIFIC (80h)that cause this bit to be set. The default for this bit is 1 because the default of STATUS_INPUT[3] LOW_Vin defaulting to 1.

Copyright © 2016, Texas Instruments Incorporated

7.6.35 STATUS_WORD (79h)

The STATUS_WORD command returns two bytes of information with a summary of the device fault and warning conditions. The low byte is identical to the STATUS_BYTE above. The additional byte reports the warning conditions for output overvoltage and overcurrent, as well as the power good status of the converter.

COMMAND	STATUS_WORD (low byte) = STATUS_BYTE							
Format	Unsigned binary							
Bit Position	7	6	5	4	3	2	1	0
Access	r	r	r	r	r	r	r	r
Function	X	OFF	OVF	OCF	x	OTFW	CML	oth
Default Value	0	X	0	0	0	0	0	1

COMMAND	STATUS_WORD (high byte)							
Format	Unsigned binary							
Bit Position	7	6	5	4	3	2	1	0
Access	r	r	r	r	r^E	r	r	r
Function	VFW	OCFW	INPUT	MFR	PGOOD_Z	X	X	X
Default Value	0	0	X	0	X	0	0	0

A 1 in any of the high byte bit positions indicates that:

VFW An output voltage fault or warning has occurred (OVF or OVW or UVW or UVF or VOUT_MAX_Warning or TONMAXF). Check STATUS_VOUT. Per the PMBus v1.3 spec sections 10.2.4 and 10.2.5, this bit is not clearable through a PMBus write. In contrast, the bit is to be cleared by clearing the bits in STATUS_VOUT that cause this bit to be set.

OCFW An output current warning or fault has occurred (OCF or OCW). Check STATUS_IOUT. Per the PMBus v1.3 spec sections 10.2.4 and 10.2.5, this bit is not clearable through a PMBus write. In contrast, the bit is to be cleared by clearing the bits in STATUS_IOUT that cause this bit to be set.

INPUT INPUT fault or warning in STATUS_INPUT is present. Check STATUS_INPUT. Per the PMBus v1.3 spec sections 10.2.4 and 10.2.5, this bit is not clearable through a PMBus write. In contrast, the bit is to be cleared by clearing the bits in STATUS_INPUT that cause this bit to be set.

MFR An manufacturer specific fault or warning condition has occurred (over temperature fault from Bandgap or IV_PPV1). Check STATUS_MFR_SPECIFIC. Per the PMBus v1.3 spec sections 10.2.4 and 10.2.5, this bit is not clearable through a PMBus write. In contrast, the bit is to be cleared by clearing the bits in STATUS_MFR_SPECIFIC that cause this bit to be set.

PGOOD_Z Power is not good, and the following condition is present: output over or under voltage warning or fault, TON_MAX_FAULT, over temperature warning or fault, over current warning or fault, insufficient input voltage. Please refer to the FAULT RESPONSE table for the possible sources to trigger PGOOD_Z. The signal is unlatched and always represents the current state of the device. The factory default setting for PGOOD_Z mask bit is 1, indicating that PGOOD_Z itself cannot trigger SMBALERT by default. If unmask PGOOD_Z bit, the SMBALERT is set not to trigger before Power Good going high the first time, which is to avoid the device holding up SMBALERT bus when it is not commanded to start up and PGOOD stays low.

Copyright © 2016, Texas Instruments Incorporated

7.6.36 STATUS_VOUT (7Ah)

The STATUS_VOUT command returns one byte of information relating to the status of the output voltage related faults.

COMMAND	STATUS_VOUT							
Format	Unsigned binary							
Bit Position	7	6	5	4	3	2	1	0
Access	r/w^E	r/w^E	r/w^E	r/w^E	r/w^E	r/w^E	r	r
Function	OVF	OVW	UVW	UVF	VOUT_MAX_MIN_Warning	TONMAXF	X	X
Default Value	0	0	0	0	0	0	0	0

A 1 in any of these bit positions indicates that:

OVF The device has seen the output voltage rise above the output overvoltage fault threshold VOUT_OV_FAULT_LIMIT. This bit is writeable to clear and the EEPROM bit is for SMBALERT_MASK. For loop slave device, this bit is forced to 0.

OVW The device has seen the output voltage rise above the output overvoltage warn threshold VOUT_OV_WARN_LIMIT. This bit is writeable to clear and the EEPROM bit is for SMBALERT_MASK. For loop slave device, this bit is forced to 0.

UVW The device has seen the output voltage fall below the output undervoltage warn threshold VOUT_UV_WARN_LIMIT. This bit is writeable to clear and the EEPROM bit is for SMBALERT_MASK. For loop slave device, this bit is forced to 0.

UVF The device has seen the output voltage fall below the output undervoltage fault threshold VOUT_UV_FAULT_LIMIT. This bit is writeable to clear and the EEPROM bit is for SMBALERT_MASK. For loop slave device, this bit is forced to 0.

VOUT_MAX_MIN_Warning An attempt is made to program the VOUT_COMMAND in excess of the value in VOUT_MAX or under the value in VOUT_MIN. This bit is writeable to clear and the EEPROM bit is for SMBALERT_MASK. For loop slave device, this bit is forced to 0.

TONMAXF A TON_MAX_FAULT has occurred. This bit is writeable to clear and the EEPROM bit is for SMBALERT_MASK. For loop slave device, this bit is forced to 0.

7.6.37 STATUS_IOUT (7Bh)

The STATUS_IOUT command returns one byte of information relating to the status of the output current related faults.

COMMAND	STATUS_IOUT							
Format	Unsigned binary							
Bit Position	7	6	5	4	3	2	1	0
Access	r/w^E	r	r/w^E	r	r	r	r	r
Function	OCF	X	OCW	X	X	X	X	X
Default Value	0	0	0	0	0	0	0	0

A 1 in any of these bit positions indicates that:

OCF The device has seen the output current rise above the level set by IOUT_OC_FAULT_LIMIT. This bit is writeable to clear and the EEPROM bit is for SMBALERT_MASK.

OCW The device has seen the output current rise above the level set by IOUT_OC_WARN_LIMIT. This bit is writeable to clear and the EEPROM bit is for SMBALERT_MASK.

Copyright © 2016, Texas Instruments Incorporated

7.6.38 STATUS_INPUT (7Ch)

The STATUS_INPUT command returns one byte of information relating to the status of the input-related faults of the converter.

COMMAND	STATUS_INPUT							
Format	Unsigned binary							
Bit Position	7	6	5	4	3	2	1	0
Access	r	r	r	r	r/w^E	r	r	r
Function	X	X	X	X	LOW_Vin	X	X	X
Default Value	0	0	0	0	1	0	0	0

A 1 in any of these bit positions indicates that:

LOW_Vin The unit is off because of insufficient input voltage. The bit sets when the unit powers up and stays set until the first time AVIN exceeds VIN_ON. During the initial power up, LOW_Vin is not latched and does not trigger SMBALERT. Once AVIN does exceed VIN_ON for the first time, any subsequent AVIN < VIN_OFF events are latched, trigger SMBALERT. This bit is writeable to clear and the EEPROM bit is for SMBALERT_MASK.

7.6.39 STATUS_TEMPERATURE (7Dh)

The STATUS_TEMPERATURE command returns one byte of information relating to the status of the external temperature related faults.

COMMAND	STATUS_TEMPERATURE							
Format	Unsigned binary							
Bit Position	7	6	5	4	3	2	1	0
Access	r/w^E	r/w^E	r	r	r	r	r	r
Function	OTF	OTW	X	X	X	X	X	X
Default Value	0	0	0	0	0	0	0	0

A 1 in any of these bit positions indicates that:

OTF The measured external temperature value of READ_TEMPERATURE_1 is equal to or greater than the level set by OT_FAULT_LIMIT. This bit is writeable to clear and the EEPROM bit is for SMBALERT_MASK. However, once cleared, the bit is set again unless the value in READ_TEMPERATURE_1 has fallen 20°C from the OT_FAULT_LIMIT.

OTW The measured external temperature value of READ_TEMPERATURE_1 is equal to or greater than the level set by OT_WARN_LIMIT. This bit is writeable to clear and the EEPROM bit is for SMBALERT_MASK. However, once cleared, the bit is set again unless the value in READ_TEMPERATURE_1 has fallen 20°C from the OT_WARN_LIMIT.

7.6.40 STATUS_CML (7Eh)

The STATUS_CML command returns one byte of information relating to the status of the communication-related faults of the converter.

COMMAND	STATUS_CML							
Format	Unsigned binary							
Bit Position	7	6	5	4	3	2	1	0
Access	r/w^E	r/w^E	r/w^E	r/w^E	r	r	r/w^E	r
Function	ivc	ivd	pec	mem	X	X	oth	X
Default Value	0	0	0	0	0	0	0	0

A 1 in any of these bit positions indicates that:

ivc An invalid or unsupported command has been received. This bit is writeable to clear and the EEPROM bit is for SMBALERT_MASK.

ivd An invalid or unsupported data has been received. This bit is writeable to clear and the EEPROM

Copyright © 2016, Texas Instruments Incorporated

bit is for SMBALERT_MASK.

pec A packet error check failed. This bit is writeable to clear and the EEPROM bit is for SMBALERT_MASK.

mem A fault has been detected with the internal memory. This bit is writeable to clear and the EEPROM bit is for SMBALERT_MASK.

oth Some other communication fault or error has occurred. This bit is writeable to clear and the EEPROM bit is for SMBALERT_MASK.

7.6.41 STATUS_MFR_SPECIFIC (80h)

The STATUS_MFR_SPECIFIC command returns one byte of information relating to the status of manufacturer-specific faults or warnings.

COMMAND	STATUS_MFR_SPECIFIC							
Format	Unsigned binary							
Bit Position	7	6	5	4	3	2	1	0
Access	r/w^E	r	r	r/w^E	r	r	r	r
Function	otf_bg	illzero	illmany1s	iv_ppv1	iv_ppv0	0	is_Slave	sync_flt
Default Value	0	0	0	0	0	0	0	0

A 1 in any of these bit positions indicates that:

otf_bg The internal temperature from bandgap is above the thermal shutdown (TSD) fault threshold. This bit is writeable to clear and the EEPROM bit is for SMBALERT_MASK.

illzero The operation FSM has hit an illegal *ZERO* state. The FSM is a one-hot implementation, so all zeros in the state is illegal and should never occur. This event is informational only and would not trigger $\overline{\text{SMBALERT}}$.

illmany1s The operation FSM for has hit an illegal *more than one hot* state. The FSM is a one-hot implementation, so a state where multiple state bits are HI is illegal and should never occur. This event is informational only and would not trigger $\overline{\text{SMBALERT}}$.

iv_ppv1 The ADDR1 detection fails to resolve 4 consecutive values. To avoid initial turnon events from clearing this condition and the user not being aware why the default ADDR1 value was used, this bit is only clearable through the CLEAR_FAULTS command or writing a logic 1 to this bit, essentially off and on events do not clear it as with the other standard status bits. This condition will trigger $\overline{\text{SMBALERT}}$.

iv_ppv0

sync_flt A synchronization fault. This could be because (a) Clock slave: an expected external SYNC was never present; or present, then lost, or (b) Clock master: an internal SYNC signal is not sensed on the SYNC pin. This bit is a live (essentially, unlatched) indicator. This event is informational only and would not trigger $\overline{\text{SMBALERT}}$.

7.6.42 READ_VOUT (8Bh)

The READ_VOUT commands returns two bytes of data in the linear data format that represent the output voltage of the converter. The output voltage is sensed at the remote sense amplifier output pin so voltage drop to the load is not accounted for. The data format is as shown below:

COMMAND	READ_VOUT															
Format	Linear, two's complement binary															
Bit Position	7	6	5	4	3	2	1	0	7	6	5	4	3	2	1	0
Access	r	r	r	r	r	r	r	r	r	r	r	r	r	r	r	r
Function	Mantissa															
Default Value	0	0	0	0	0	0	0	0	0	0	0	0	0	0	0	0

Copyright © 2016, Texas Instruments Incorporated

7.6.42.1 Exponent

Value fixed at 10111, Exponent for linear mode values is –9 (equivalent of 1.95 mV/count, specified in the VOUT_MODE command).

7.6.42.2 Mantissa

Use Equation 12 to calculate the output voltage.

$$V_{OUT} = \text{Mantissa} \times 2^{\text{Exponent}} \quad (12)$$

7.6.43 READ_IOUT (8Ch)

The READ_IOUT commands returns two bytes of data in the linear data format that represent the output current of the converter. The average output current is sensed according to the method described in *Low-Side MOSFET Current Sensing and Overcurrent Protection*. The data format is as shown below:

COMMAND	READ_IOUT															
Format	Linear, two's complement binary															
Bit Position	7	6	5	4	3	2	1	0	7	6	5	4	3	2	1	0
Access	r	r	r	r	r	r	r	r	r	r	r	r	r	r	r	r
Function	Exponent					Mantissa										
Default Value	1	1	1	0	0	0	0	0	0	0	0	0	0	0	0	0

The device scales the output current before it reaches the internal analog to digital converter so that resolution of the output current read is 62.5 mA. The maximum value that can be reported is 40 A. The user must set the IOUT_CAL_OFFSET parameter correctly to obtain accurate results. Use Equation 13 to calculate the output current.

$$I_{OUT} = \text{Mantissa} \times 2^{\text{Exponent}} \quad (13)$$

7.6.43.1 Exponent

default: 11100 (binary) -4 (decimal) (62.5 mA LSB)

These default settings are not programmable.

7.6.43.2 Mantissa

The lower 10 bits are the result of the ADC conversion of the average output current, as indicated by the output of the internal current sense amplifier. The 11th bit is fixed at 0 because only positive numbers are considered valid. Any computed negative current is reported as 0 A.

Copyright © 2016, Texas Instruments Incorporated

7.6.44 READ_TEMPERATURE_1 (8Dh)

The READ_TEMPERATURE_1 command returns the external temperature in degrees Celsius.

COMMAND	READ_TEMPERATURE_1															
Format	Linear, two's complement binary															
Bit Position	7	6	5	4	3	2	1	0	7	6	5	4	3	2	1	0
Access	r	r	r	r	r	r	r	r	r	r	r	r	r	r	r	r
Function	Exponent					Mantissa										

7.6.44.1 Exponent

default: 00000 (binary) 0 (decimal)

These default settings are not programmable.

7.6.44.2 Mantissa

The lower 11 bits are the result of the ADC conversion of the external temperature.

7.6.45 PMBUS_REVISION (98h)

The PMBUS_REVISION command returns a single, unsigned binary byte that indicates that these devices are compatible with the 1.3 revision of the PMBus specification (Part I and Part II).

COMMAND	PMBUS_REVISION							
Format	Unsigned binary							
Bit Position	7	6	5	4	3	2	1	0
Access	r	r	r	r	r	r	r	r
Default Value	0	0	1	1	0	0	1	1

7.6.46 IC_DEVICE_ID (ADh)

Th IC_DEVICE_ID command is a read-only block-read command that returns a single word (16 bits) with the unique device-code identifier for each device for which this device can be configured. The BYTE_COUNT field in the block read command is 2 (indicating 2 bytes follow): low byte first, high byte second.

COMMAND	IC_DEVICE_ID															
Format	Linear, binary															
Bit Position	7	6	5	4	3	2	1	0	7	6	5	4	3	2	1	0
Access	r	r	r	r	r	r	r	r	r	r	r	r	r	r	r	r
Default Value	See below															

The default for the device identifier code is 4623h – Code Identifier for TPS546C23.

7.6.47 IC_DEVICE_REV (AEh)

The IC_DEVICE_REV command is a read-only block-read command that returns a single word (16 bits) with the unique Device revision identifier. The DEVICE_REV starts at 0 with the first silicon and is incremented with each subsequent silicon revision. The BYTE_COUNT field in the Block Read command is 2 (indicating 2 bytes follow): low byte first, high byte second.

COMMAND	IC_DEVICE_REV															
Format	Linear, tbinary															
Bit Position	7	6	5	4	3	2	1	0	7	6	5	4	3	2	1	0
Access	r	r	r	r	r	r	r	r	r	r	r	r	r	r	r	r
Default Value	See below															

The default of the device identifier code is 0001b.

7.6.48 MFR_SPECIFIC_00 (D0h)

The MFR_SPECIFIC_00 command is dedicated as a user scratch pad. Only the lower 8 bits are writeable for users. This is a read word command, with only the lower 8 bits accessible. This command is not a read byte command. The contents of this register can be stored to nonvolatile memory using the STORE_DEFAULT_ALL command.

COMMAND	MFR_SPECIFIC_00															
Format	Unsigned binary															
Bit Position	7	6	5	4	3	2	1	0	7	6	5	4	3	2	1	0
Access	r	r	r	r	r	r	r	r	r/w^{E}	r/w^{E}	r/w^{E}	r/w^{E}	r/w^{E}	r/w^{E}	r/w^{E}	r/w^{E}
Function	User scratch pad															
Default Value	0	0	0	0	0	0	0	0	0	0	0	0	0	0	0	0

7.6.49 VREF_TRIM (MFR_SPECIFIC_04) (D4h)

The VREF_TRIM command applies a fixed offset voltage to the Error Amplifier reference (EA_REF) voltage. It is most typically used to trim the output voltage at the time the PMBus device is assembled into the end user's system. The contents of this register can be stored to nonvolatile memory using the STORE_DEFAULT_ALL command.

For loop slave device, this command cannot be accessed. Any writes to this command will be ignored. An attempt to read or write this command will result in a NACK'd command, the reporting of an IVC fault, and triggering of SMB_ALERT.

The settings of the VOUT_MODE command determine the effect of VREF_TRIM command. In this device, the VOUT_MODE is fixed to Linear with an exponent of –9 (decimal).

$$EA_REF = [(VOUT_COMMAND \times VOUT_SCALE_LOOP) + (VREF_TRIM + STEP_VREF_MARGIN_HIGH \times OPERATION[5] + STEP_VREF_MARGIN_LOW \times OPERATION[4])] \times 1.953\ mV \quad (14)$$

The maximum trim ranges between –64*1.953 mV to +63*1.953 mV in 1.953-mV steps.

If a value outside this range is given with this command, the device sets the reference voltage to the upper or lower limit depending on the direction of the setting, asserts SMBALERT and sets the CML bit in STATUS_BYTE and the invalid data bit in STATUS_CML.

The value of EA_REF including VREF_TRIM is also limited by the values of VOUT_MAX, VOUT_MIN, VOUT_COMMAND, VOUT_SCALE_LOOP and STEP_VREF_MARGIN_HIGH/LOW. See VOUT_MAX and VOUT_MIN for additional details.

The EA_REF voltage transition occurs at the rate determined by the current state:

- Soft-Start: TON_RISE command
- Steady-State: VOUT_TRANSITION_RATE command
- TOFF_DELAY: VOUT_TRANSITION_RATE command
- Soft-Stop: TOFF_FALL command

The VREF_TRIM has two data bytes formatted as two's complement binary integer and can have positive and negative values.

COMMAND	VREF_TRIM															
Format	Linear, two's complement binary															
Bit Position	7	6	5	4	3	2	1	0	7	6	5	4	3	2	1	0
Access	r/w^{E}	r	r	r	r	r	r	r	r	r	r/w^{E}	r/w^{E}	r/w^{E}	r/w^{E}	r/w^{E}	r/w^{E}
Function	High Byte								Low Byte							
Default Value	0	0	0	0	0	0	0	0	0	0	0	0	0	0	0	0

Copyright © 2016, Texas Instruments Incorporated

High Byte:

default: 0000 0000 (binary) 0 (decimal)

Minimum: 1111 1111 (binary) (sign extended)

Maximum: 0000 0000 (binary) (sign extended)

Low Byte:

default: 0000 0000 (binary) 0 (decimal)

Minimum: 1100 0000 (binary) –64 (decimal) (–125 mV) (sign extended, two's compliment)

Maximum: 0011 1111 (binary) 63 (decimal) (123 mV)

7.6.50 STEP_VREF_MARGIN_HIGH (MFR_SPECIFIC_05) (D5h)

The STEP_VREF_MARGIN_HIGH command, specifing a positive offset voltage on EA_VREF, is used to increase the reference voltage by shifting the reference higher. When the OPERATION command is set to *Margin High*, the output will increase by the voltage indicated by this command.

For loop slave device, this command cannot be accessed. Any writes to this command will be ignored. An attempt to read or write this command will result in a NACK'd command, the reporting of an IVC fault, and triggering of SMB_ALERT.

The effect of this command is determined by the settings of the VOUT_MODE command. In this device, the VOUT_MODE is fixed to Linear with an exponent of –9 (decimal). The actual reference voltage commanded by a margin high command can be found in Equation 14.

The margin high range is between 0 and 31 × 1.953 mV in 1.953-mV steps.

If a value outside this range is given with this command, the device sets the reference voltage to the upper or lower limit depending on the direction of the setting, asserts SMBALERT and sets the CML bit in STATUS_BYTE and the invalid data bit in STATUS_CML.

The value of EA_REF including STEP_VREF_MARGIN_HIGH is also limited by the values of VOUT_MAX, VOUT_MIN, VOUT_COMMAND, VOUT_SCALE_LOOP and VREF_TRIM. See VOUT_MAX and VOUT_MIN for additional details.

The EA_REF voltage transition occurs at the rate determined by the current state:

- Soft-Start: TON_RISE command
- Steady-State: VOUT_TRANSITION_RATE command
- TOFF_DELAY: VOUT_TRANSITION_RATE command
- Soft-Stop: TOFF_FALL command

COMMAND	STEP_VREF_MARGIN_HIGH															
Format	Linear, two's complement binary															
Bit Position	7	6	5	4	3	2	1	0	7	6	5	4	3	2	1	0
Access	r	r	r	r	r	r	r	r	r	r	r	r/w	r/w	r/w	r/w	r/w
Function	High Byte								Low Byte							

High Byte:

default: 0000 0000 (binary) 0 (decimal)

Low Byte:

Minimum: 0000 0000 (binary) 0 (decimal) (0 mV)

Maximum: 0001 1111 (binary) 31 (decimal) (60.5 mV)

The read-writeable bits in this register do NOT have direct EEPROM backup; however, the register does restore to one of two configurable values as determined by RSMHI_VAL in (E5h) MFR_SPECIFIC_21 (OPTIONS).

- RSMHI_VAL = 0: STEP_VREF_MARGIN_HIGH will restore to 0009h (9 decimal or 17.6 mV).
- RSMHI_VAL = 1: STEP_VREF_MARGIN_HIGH will restore to 000fh (15 decimal or 29.3 mV).

Copyright © 2016, Texas Instruments Incorporated

7.6.51 STEP_VREF_MARGIN_LOW (MFR_SPECIFIC_06) (D6h)

The STEP_VREF_MARGIN_LOW command, specifying a negative offset voltage on EA_VREF, is used to decrease the reference voltage by shifting the reference lower. When the OPERATION command is set to *Margin Low*, the output will decrease by the voltage indicated by this command.

For loop slave device, this command cannot be accessed. Any writes to this command will be ignored. An attempt to read or write this command will result in a NACK'd command, the reporting of an IVC fault, and triggering of SMB_ALERT.

The effect of this command is determined by the settings of the VOUT_MODE command. In this device, the VOUT_MODE is fixed to Linear with an exponent of –9 (decimal). The actual reference voltage commanded by a margin low command can be found in Equation 14.

The margin low range is between -64*1.953 mV and -1*1.953 mV in 1.953-mV steps.

If a value outside this range is given with this command, the device sets the reference voltage to the upper or lower limit depending on the direction of the setting, asserts SMBALERT and sets the CML bit in STATUS_BYTE and the invalid data bit in STATUS_CML.

The value of EA_REF including STEP_VREF_MARGIN_LOW is also limited by the values of VOUT_MAX, VOUT_MIN, VOUT_COMMAND, VOUT_SCALE_LOOP and VREF_TRIM. See VOUT_MAX and VOUT_MIN for additional details.

The EA_REF voltage transition occurs at the rate determined by the current state:

- Soft-Start: TON_RISE command
- Steady-State: VOUT_TRANSITION_RATE command
- TOFF_DELAY: VOUT_TRANSITION_RATE command
- Soft-Stop: TOFF_FALL command

COMMAND	STEP_VREF_MARGIN_LOW															
Format	Linear, two's complement binary															
Bit Position	7	6	5	4	3	2	1	0	7	6	5	4	3	2	1	0
Access	r/w	r	r	r	r	r	r	r	r	r	r/w	r/w	r/w	r/w	r/w	r/w
Function	High Byte								Low Byte							

High Byte:

default: 1111 1111 (binary) (MSB is sign bit, sign extended)

Low Byte:

Minimum: 1100 0000 (binary) –64 (decimal) (–125 mV)

Maximum: 1111 1111 (binary) –1 (decimal) (–2 mV)

The read-writeable bits in this register do NOT have direct EEPROM backup; however, the register does restore to one of two configurable values as determined by RSMLO_VAL in (E5h) MFR_SPECIFIC_21 (OPTIONS).

- RSMLO_VAL = 0: STEP_VREF_MARGIN_LOW will restore to fff7h (–9 decimal or –17.6 mV)
- RSMLO_VAL = 1: STEP_VREF_MARGIN_LOW will restore to fff1h (–15 decimal or –29.3 mV)

7.6.52 PCT_OV_UV_WRN_FLT_LIMITS (MFR_SPECIFIC_07) (D7h)

The PCT_OV_UV_WRN_FLT_LIMITS command is used to set the PGOOD, VOUT_UNDER_VOLTAGE (UV) and VOUT_OVER_VOLTAGE (OV) limits as a percentage of nominal.

For loop slave device, this command cannot be accessed. Any writes to this command will be ignored. An attempt to read or write this command will result in a NACK'd command, the reporting of an IVC fault, and triggering of SMB_ALERT.

Copyright © 2016, Texas Instruments Incorporated

The PCT_OV_UV_WRN_FLT_LIMITS takes a one byte data formatted as shown below:

COMMAND	PCT_OV_UV_WRN_FLT_LIMITS							
Format	Unsigned binary							
Bit Position	7	6	5	4	3	2	1	0
Access	r	r	r	r	r	r	r/w^{E}	r/w^{E}
Function	X	X	X	X	X	X	PCT_MSB	PCT_LSB
Default Value	0	0	0	0	0	0	0	0

The PGOOD, VOUT_UNDER_VOLTAGE (UV) and VOUT_OVER_VOLTAGE (OV) settings are shown in Table 13, as a percentage of nominal reference voltage on the FB pin.

Table 13. OV/UV Protection Settings (Typical Values)

PCT_MSB	PCT_LSB	UV FAULT	UV WARN	OV WARN	OV FAULT	UNIT
0	0	–83%	–88%	112%	117%	EA_REF
0	1	–88%	–90%	110%	112%	EA_REF
1	0	–72%	–78%	112%	117%	EA_REF
1	1	–58%	–64%	112%	117%	EA_REF

The PGOOD pin may trip if the output voltage is too high (using OV WARN) or too low (using UV WARN). Additionally, the PGOOD pin has hysteresis. When the OV WARN output voltage OV WARN is tripped, the FB voltage must lower below the 105% of EA_REF, before PGOOD is reset. Likewise, when output voltage UV WARN is tripped, the FB voltage must rise above 95% of EA_REF, before PGOOD is reset.

7.6.53 OPTIONS (MFR_SPECIFIC_21) (E5h)

The OPTIONS register can be used for setting user selectable options, as shown below. The contents of this register can be stored to nonvolatile memory using the STORE_DEFAULT_ALL command.

COMMAND	OPTIONS															
Format	Unsigned binary															
Bit Position	7	6	5	4	3	2	1	0	7	6	5	4	3	2	1	0
Access	r	r/w^{E}	r/w^{E}	r/w^{E}	r/w^{E}	r/w^{E}	r/w	r/w^{E}	r/w^{E}	r/w^{E}	r/w^{E}	r/w	r/w	r/w^{E}	r/w^{E}	r/w^{E}
Function	X	RSMHI_VAL	RSMLO_VAL	x	RST_VOUT_oSD	x	READ_VOUT_RANGE[1:0]		EN_AUTO_ARA	AVG_PROG[1:0]		DLO	VSM	EN_ADC_CNTL	EN_RESET_B	DIS_NEGILIM
Default Value	0	0	0	1	0	0	0	1	1	0	0	0	0	1	0	0

7.6.53.1 DIS_NEGILIM Bit

When set, this bit disables the negative current limit protection on the LFET.

7.6.53.2 EN_RESET_B Bit

When set, this bit enables the RESET_B functionality of the $\overline{\text{RESET}}$/PGD pin.

BIT VALUE	ACTION
0	$\overline{\text{RESET}}$/PGD pin = PGOOD
1	$\overline{\text{RESET}}$/PGD pin = RESET_B

Copyright © 2016, Texas Instruments Incorporated

7.6.53.3 EN_ADC_CNTL Bit

This bit enables ADC operation used for voltage, current and temperature monitoring.

BIT VALUE	ACTION
0	Disable ADC operation
1	Enable ADC operation

NOTE

The EN_ADC_CNTL bit must be set to enable output voltage, current and temperature telemetry. When the EN_ADC_CNTL bit is zero, the READ_VOUT, READ_IOUT and READ_TEMPERATURE_2 registers do not update continuously, and retain the previous values from the last time EN_ADC_CNTL was set.

7.6.53.4 VSM Bit

This bit configures the measurement system for fast, V_{OUT}-only measurement mode. Setting this bit disables READ_IOUT, and READ_TEMPERATURE_1, and instead allows the device to update READ_VOUT more frequently. This bit does not have EEPROM backup.

BIT VALUE	ACTION
0	Measure V_{OUT}, temperature, and I_{OUT}
1	Measure only V_{OUT}

NOTE

For READ_VOUT, multiple samples (defined by AVG_PROG[1:0] Bits) are obtained and averaged. When entering and exiting VSM mode, the first calculated result could lose one sample, for example, 7 sampled value but averaged by 8, resulting the first updated READ_VOUT data point have worst case error about 1/8 of the nominal value.

7.6.53.5 DLO Bit

This bit allows bypassing the normal valid data checks on register writes. This feature is included for flexibility during debug to quickly generate fault conditions and/or possibly work around any data limit protection mechanisms prohibiting output voltage programming. This bit does not have EEPROM backup.

BIT VALUE	ACTION
0	Normal PMBus data write restrictions
1	Data write restrictions are overridden for the following registers: SMBALERT_MASK, VOUT_COMMAND, VOUT_SCALE_LOOP, VREF_TRIM, STEP_VREF_MARGIN_HIGH, STEP_VREF_MARGIN_LOW, IOUT_OC_FAULT_LIMIT, IOUT_OC_WARN_LIMIT, OT_FAULT_LIMIT, OT_WARN_LIMIT, VOUT_MIN, VOUT_MAX, VIN_ON, VIN_OFF, and OPERATION.

NOTE

CAUTION: Users should use this bit with extreme caution. Setting this bit allows invalid data conditions to be programmed into the device which can lead to damage. Invalid data written into any register when DLO is enabled does NOT set the IVD bit; nor trigger SMBALERT. The invalid data is simply allowed to be programmed. Furthermore, invalid data programmed into a command/status register while DLO is enabled, does not trigger SMBALERT upon deassertion of DLO. So, it is possible to exit DLO mode with invalid data in command/status registers. Use with extreme caution.

Copyright © 2016, Texas Instruments Incorporated

7.6.53.6 AVG_PROG[1:0] Bits

These bits configure programmable digital measurement averaging. Bits provide programmable averaging for current (READ_IOUT), temperature (READ_TEMPERATURE_1), and voltage (READ_VOUT). The default (00b) yields 16x averaging for all three parameters; however, this default can be changed and stored in EEPROM, if necessary. The programming options are as follows:

BIT VALUE	ACTION
00	Accumulating Averaging = 16x
01	Accumulating Averaging = 0x. Use this setting to bypass the averagers. Every sample from measurement system updates corresponding READ_XXX CSR.
10	Accumulating Averaging = 8x
11	Accumulating Averaging = 32x

7.6.53.7 EN_AUTO_ARA Bit

This bit enables auto-alert response address response. When this feature is enabled, and after the device has successfully responded to an ARA transaction, the hardware automatically masks any fault source currently set from reasserting SMBALERT. This prevents PMBus *bus hogging* in the case of a persistent fault in a device that consistently wins ARA arbitration because of the device address. In contrast, when this bit is cleared, immediate reassertion of SMBALERT is allowed in the event of a persistent fault and the responsibility is upon the host to mask each source individually.

7.6.53.8 READ_VOUT_RANGE[1:0] Bits

The ADC input voltage range is limited to 0.9 V. For READ_VOUT, the output voltage is divided down before input to ADC. Large signal amplitude gives better signal-to-noise ratio. The READ_VOUT_RANGE[1:0] bits are used to force the input voltage divider of the internal ADC for output voltage measurement to one of the 3 possible values.

VOUT_SCALE_LOOP	READ_VOUT_RANGE[1:0]	OUT
1	00b	1/2 IN
x	11b	
0.5	00b	1/4 IN
x	10b	
0.25	00b	1/8 IN
x	01b	

7.6.53.9 RST_VOUT_oSD Bit

When set high, this bit is used to force VOUT_COMMAND to the default value upon any shutdown or fault condition:

- FAULT with programmed shutdown response
- FAULT with programmed restart response
- Normal, controlled shutdown (e.g. CNTL pin)
- LOW_VIN

7.6.53.10 RSMLO_VAL Bit

The restore step-margin low-value (RSMLO_VAL) bit is used to configure the default restore value for (D6h) MFR_SPECIFIC_06 (STEP_VREF_MARGIN_LOW).

BIT VALUE	ACTION
0	STEP_VREF_MARGIN_LOW will restore to fff7h (–9 decimal or –17.6 mV)
1	STEP_VREF_MARGIN_LOW will restore to fff1h (–15 decimal or –29.3 mV)

Copyright © 2016, Texas Instruments Incorporated

7.6.53.11 RSMHI_VAL Bit

This restore step margin high value (RSMHI_VAL) bit is used to configure the default restore value for (D5h) MFR_SPECIFIC_05 (STEP_VREF_MARGIN_HIGH).

BIT VALUE	ACTION
0	STEP_VREF_MARGIN_HIGH will restore to 0009h (9 decimal or 17.6 mV)
1	STEP_VREF_MARGIN_HIGH will restore to 000fh (15 decimal or 29.3 mV)

7.6.54 MISC_CONFIG_OPTIONS (MFR_SPECIFIC_32) (F0h)

This user-accessible register is used for miscellaneous options, as shown below. The contents of this register can be stored to nonvolatile memory using the STORE_DEFAULT_ALL command.

COMMAND	MISC_CONFIG_OPTIONS															
Format	Unsigned binary															
Bit Position	7	6	5	4	3	2	1	0	7	6	5	4	3	2	1	0
Access	r	r	r	r	r	r	r	r/w^{E}	r/w^{E}	r/w^{E}	r	r/w^{E}	r	r/w^{E}	r/w^{E}	r/w^{E}
Function	X	X	X	X	X	X	X	SYNC_FAULT_DIS	FORCE_SYNC_IN	FORCE_SYNC_OUT	X	EN_AVS_USER	X	HSOC_USER_TRIM[1:0]		OV_RESP_SEL
Default Value	0	0	0	0	0	0	0	0	0	0	0	1	0	0	1	1

7.6.54.1 OV_RESP_SEL Bit

This bit selects between two options for low-side FET behavior after an output overvoltage fault condition. Regardless of the setting of this bit, the low-side FET latches on when an output OV fault is detected (if the OV_FAULT_RESPONSE is not programmed to *ignore*).

BIT VALUE	ACTION
0	The low-side FET remains on until either the part initiates a new startup of the output voltage or the CLEAR_FAULTS command is given while the part is in the *DISABLE* operational state
1	The low-side FET turns off as soon as the sensed output (at FB pin) drops below 0.2 V.

Copyright © 2016, Texas Instruments Incorporated

7.6.54.2 HSOC_USER_TRIM[1:0] Bits

These trim bits are provided so the user can adjust the HSOC threshold to account for the application-specific requirements for input-voltage sensing parasitics and component-current handling. The bit settings are defined as follows:

BIT VALUE	ACTION
00	HSOC change from default = 0
01	HSOC change from default = 12.5%
10	HSOC change from default = –25%
11	HSOC change from default = –12.5%

7.6.54.3 EN_AVS_USER Bit

Setting this bit high is required enabling the COMP-level shifter that eliminates overshoot and undershoot of V_{OUT} when the reference is ramped. The value of this bit is latched when the driver is enabled to swtich which prevents the user from enabling or disabling the level shifter while the output is switching.

7.6.54.4 FORCE_SYNC_OUT Bit

This bit forces the device to output the free-running clock on the SYNC pin.

7.6.54.5 FORCE_SYNC_IN Bit

This bit forces the device to be synchronized to an external PWM clock applied on the SYNC pin.

7.6.54.6 SYNC_FAULT_DIS Bit

When set, this bit disables any reporting (digital status) and response (analog and digital) upon SYNC_FAULT.

版权 © 2016, Texas Instruments Incorporated

8 Applications and Implementation

注

Information in the following applications sections is not part of the TI component specification, and TI does not warrant its accuracy or completeness. TI's customers are responsible for determining suitability of components for their purposes. Customers should validate and test their design implementation to confirm system functionality.

8.1 Application Information

The TPS546C23 devices are highly-integrated, synchronous step-down DC-DC converters. These devices are used to convert a higher DC-input voltage to a lower DC-output voltage, with a maximum output current of 35 A. Use the following design procedure to select key component values for this device, and set the appropriate behavioral options through the PMBus.

8.2 Typical Application

8.2.1 4.5-V to 18-V Input, 1-V Typical Output, 35-A Converter

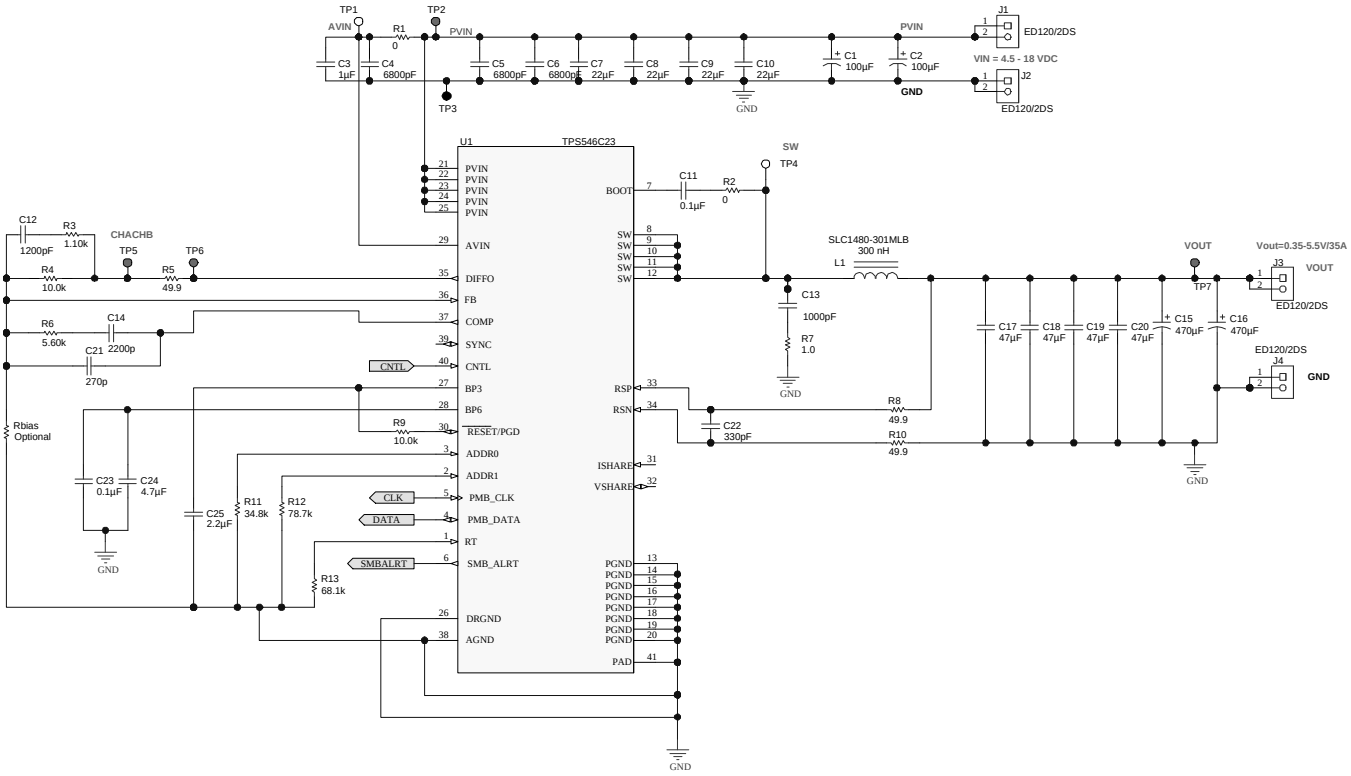

Copyright © 2016, Texas Instruments Incorporated

Figure 39. Typical Application Schematic, TPS546C23

Copyright © 2016, Texas Instruments Incorporated

Typical Application (continued)

8.2.1.1 Design Requirements

For this design example, use the input parameters listed in Table 14.

Table 14. Design Parameters

DESIGN PARAMETER		TEST CONDITIONS	MIN	TYP	MAX	UNIT
V_{IN}	Input voltage		4.5	12	18	V
$V_{IN(ripple)}$	Input ripple voltage	I_{OUT} = 35 A		0.3		V
V_{OUT}	Output voltage			1		V
$\Delta V_{O(\Delta VI)}$	Line regulation	4.5 V ≤ V_{IN} ≤ 18 V			0.5%	
$\Delta V_{O(\Delta IO)}$	Load regulation	0 V ≤ I_{OUT} ≤ 35 A			0.5%	
V_{PP}	Output ripple voltage	I_{OUT} = 35 A		12		mV
ΔV_{OUT}	V_{OUT} deviation during load transient	ΔI_{OUT} = 10 A, Vin = 12 V		30		mV
I_{OUT}	Output current	4.5 V ≤ V_{IN} ≤ 18 V	0		35	A
t_{SS}	Soft-start time			5		ms
I_{OC}	Output overcurrent trip point			40		A
η	Efficiency	V_{OUT} = 1 V, I_{OUT} = 17 A, V_{IN} = 12 V		90%		
f_{SW}	Switching frequency			300		kHz

8.2.1.2 Detailed Design Procedure

8.2.1.2.1 Switching Frequency Selection

There is a tradeoff between higher and lower switching frequencies for buck converters. Higher switching frequencies may produce smaller solution size using lower valued inductors and smaller output capacitors compared to a power supply that switches at a lower frequency. However, the higher switching frequency causes extra switching losses, which decrease efficiency and impact thermal performance. In this design, a moderate switching frequency of 300 kHz achieves both a small solution size and a high-efficiency operation. With the frequency selected, use Equation 15 to calculate the timing resistor (R_T). The standard value of 68.1 kΩ is used in the design.

$$R_T = \frac{2.01 \times 10^{10}}{f_{SW}} = \frac{2.01 \times 10^{10}}{300\ \text{kHz}} = 67\ \text{k}\Omega \tag{15}$$

8.2.1.2.2 Inductor Selection

Use Equation 16 to calculate the value of the output inductor (L). The coefficient, KIND, represents the amount of inductor-ripple current relative to the maximum output current. The output capacitor filters the inductor-ripple current. Therefore, selecting a high inductor-ripple current impacts the selection of the output capacitor because the output capacitor must have a ripple-current rating equal to or greater than the inductor-ripple current. Generally, the KIND coefficient should be kept between 0.2 and 0.3 for balanced performance. Using this target ripple current, the required inductor size can be calculated as shown in Equation 16.

$$L = \frac{V_{OUT}}{V_{IN(Max)} \times f_{SW(Min)}} \times \frac{V_{IN} - V_{OUT}}{I_{OUT(Max)} \times KIND} = 1\,V \times \frac{1\,V \times (18\,V - 1\,V)}{18\,V \times 300\,kHz \times 35 \times 0.3} = 299\ nH \tag{16}$$

Selecting a value of 0.3 for the KIND coefficient, the target inductance, L, is 299 nH. Considering the variation and derating of the inductance and the 300-nH inductor, use Equation 17, Equation 18, and Equation 19 to calculate the inductor-ripple current (I_{RIPPLE}), RMS current ($I_{L(rms)}$), and peak current ($I_{L(peak)}$), respectively. These values should be used to select an inductor with approximately the target inductance value, and current ratings that allow normal operation with some margin.

$$I_{RIPPLE} = \frac{V_{OUT}}{V_{IN(Max)} \times f_{SW(Min)}} \times \frac{V_{IN(Max)} - V_{OUT}}{L1} = \frac{1\,V \times (18\,V - 1\,V)}{18\,V \times 300\,kHz \times 300\,nH} = 10.5\ A \tag{17}$$

$$I_{L(rms)} = \sqrt{\left(I_{OUT(Max)}\right)^2 + \frac{1}{12}\left(I_{RIPPLE}\right)^2} = \sqrt{(35\ A)^2 + \frac{1}{12}(10.5\ A)^2} = 35.13\ A \tag{18}$$

Copyright © 2016, Texas Instruments Incorporated

$$I_{L(peak)} = I_{OUT} + \frac{1}{2} I_{RIPPLE} = 35\ A + \frac{1}{2} \times 10.5\ A = 40.25\ A \quad (19)$$

Considering the required inductance, RMS current, and peak current, the 300-nH inductor, SLC1480-301ML, from Coilcraft was selected for this application.

8.2.1.2.3 Output Capacitor Selection

Consider the following when selecting the value of the output capacitor:

- The output-voltage deviation during load transient
- The output-voltage ripple

8.2.1.2.4 Output Voltage Deviation During Load Transient

The desired response to a load transient is the first criterion for output capacitor selection. The output capacitor must supply the load with the required current when not immediately provided by the regulator. When the output capacitor supplies load current, the impedance of the capacitor affects the magnitude of the voltage deviation during the transient.

To meet the requirements for control-loop stability, the device requires the addition of compensation components in the design of the error amplifier. While these compensation components provide for a stable control loop, they often also reduce the speed with which the regulator can respond to load transients. The delay in the regulator response to load changes can be two or more clock cycles before the control loop reacts to the change. During that time, the difference (delta) between the old and the new load current must be supplied (or absorbed) by the output capacitance. The output capacitor impedance must be designed to supply or absorb the delta current while maintaining the output voltage within acceptable limits. Equation 20 and Equation 21 show the relationship between the transient response overshoot (V_{OVER}), the transient response undershoot (V_{UNDER}), and the required output capacitance (C_{OUT}).

$$V_{OVER} < \frac{(I_{TRAN})^2 \times L}{V_{OUT} \times C_{OUT}} \quad (20)$$

$$V_{UNDER} < \frac{(I_{TRAN})^2 \times L}{(V_{IN} - V_{OUT}) \times C_{OUT}} \quad (21)$$

If

- $V_{IN(min)} > 2 \times V_{OUT}$, use overshoot to calculate minimum output capacitance.
- $V_{IN(min)} < 2 \times V_{OUT}$, use undershoot to calculate minimum output capacitance.

In this case, the minimum designed input voltage, $V_{IN(min)}$, is greater than $2 \times V_{OUT}$, so V_{OVER} dictates the minimum output capacitance. Therefore, using Equation 22, the minimum output capacitance required to meet the transient requirement is 1000 µF.

$$C_{OUT(Min)} = \frac{(I_{TRAN})^2 \times L}{V_{OUT} \times V_{OVER}} = \frac{(10\ A)^2 \times 300\ nH}{1V \times 30\ mV} = 1000\ \mu F \quad (22)$$

8.2.1.2.5 Output Voltage Ripple

The output-voltage ripple is the second criterion for output capacitor selection. Use Equation 23 to calculate the minimum output capacitance required to meet the output-voltage ripple specification.

$$C_{OUT(Min)} = \frac{1}{8 \times f_{SW}} \times \frac{I_{RIPPLE}}{V_{OUT(RIPPLE)}} = \frac{10.5\ A}{8 \times 300\ kHz \times 12\ mV} = 364\ \mu F \quad (23)$$

In this case, the target maximum output-voltage ripple is 12 mV. Under this requirement, the minimum output capacitance for ripple is 330 µF. Because this capacitance value is smaller than the output capacitance required for the transient response, select the output capacitance value based on the transient requirement. Considering the variation and derating of capacitance, in this design, two 470-µF low-ESR polymer bulk capacitors and four 47-µF ceramic capacitors were selected to meet the transient specification with sufficient margin. Therefore C_{OUT} is equal to 1128 µF.

Copyright © 2016, Texas Instruments Incorporated

With the target output capacitance value selected, use Equation 24 to calculate the maximum ESR that the output-capacitor bank allows to meet the output-voltage ripple specification. Equation 24 indicates the ESR should be less than 1.3 mΩ. Each 470-µF ceramic capacitor contributes approximately 1.3 mΩ, making the effective ESR of the output capacitor bank approximately 0.65 mΩ which is within the specification with sufficient margin.

$$ESR_{Max} = \frac{V_{OUT(RIPPLE)} - \left(\frac{I_{RIPPLE}}{8 \times f_{SW} \times C_{OUT}}\right)}{I_{RIPPLE}} = \frac{12\ mV - \left(\frac{10.5\ A}{8 \times 300\ kHz \times 1128\ \mu F}\right)}{10.5\ A} = 1.14\ m\Omega \quad (24)$$

8.2.1.2.6 Input Capacitor Selection

The power-stage input-decoupling capacitance (effective capacitance at the PVIN and PGND pins) must be sufficient to supply the high switching currents demanded when the high-side MOSFET switches on, while providing minimal input-voltage ripple as a result. This effective capacitance includes any DC-bias effects. The voltage rating of the input capacitor must be greater than the maximum input voltage with derating. The capacitor must also have a ripple-current rating greater than the maximum input-current ripple to the device during full load. Use Equation 25 to estimate the input RMS current.

$$I_{IN(rms)} = I_{OUT(Max)} \times \sqrt{\frac{V_{OUT}}{V_{IN(Min)}} \times \frac{(V_{IN(Min)} - V_{OUT})}{V_{IN(Min)}}} = 70\ A \times \sqrt{\frac{1\ V}{4.5\ V} \times \frac{(4.5\ V - 1\ V)}{4.5\ V}} = 14.6\ A \quad (25)$$

The minimum input capacitance and ESR values for a given input voltage-ripple specification, $V_{IN(ripple)}$, are shown in Equation 26 and Equation 27. The input ripple is composed of a capacitive portion ($V_{RIPPLE(cap)}$) and a resistive portion ($V_{RIPPLE(esr)}$).

$$C_{IN(Min)} = \frac{I_{OUT(Max)} \times V_{OUT}}{V_{RIPPLE(cap)} \times V_{IN(Max)} \times f_{SW}} = \frac{35\ A \times 1\ V}{0.1\ V \times 18\ V \times 300\ kHz} = 64.8\ \mu F \quad (26)$$

$$ESR_{CIN(Max)} = \frac{V_{RIPPLE(ESR)}}{I_{OUT(Max)} + \frac{1}{2} I_{RIPPLE}} = \frac{0.2\ V}{35\ A + \frac{1}{2} \times (10.5\ A)} = 5\ m\Omega \quad (27)$$

The value of a ceramic capacitor varies significantly over temperature and the amount of DC bias applied to the capacitor. The capacitance variations because of temperature can be minimized by selecting a dielectric material that is stable over temperature. X5R and X7R ceramic dielectrics are usually selected for power-regulator capacitors because these components have a high capacitance-to-volume ratio and are fairly stable over temperature. The input capacitor must also be selected with consideration of the DC bias. For this example design, a ceramic capacitor with at least a 25-V voltage rating is required to support the maximum input voltage. For this design, allow 0.1-V input ripple for $V_{RIPPLE(cap)}$ and 0.2-V input ripple for $V_{RIPPLE(esr)}$. Using Equation 26 and Equation 27, the minimum input capacitance for this design is 64.8 µF, and the maximum ESR is 5 mΩ. For this design example, four 22-µF, 25-V ceramic capacitors, three 6800-pF, 25-V ceramic capacitors, and two additional 100-µF, 25-V low-ESR electrolytic capacitors in parallel were selected for the power stage with sufficient margin.

A high-frequency PVIN-bypass capacitor is suggested to be placed close to power stage to help with ringing reduction. .

8.2.1.2.7 AVIN, BP6, BP3 Bypass Capacitor

The BP3 pin requires a minimum capacitance of 2.2 µF connected to AGND. The BP6 pin should have approximately 4.7 µF of capacitance connected to PGND. The PVIN pin should have approximately 1 µF of capacitance connected to PGND. To filter ripple on the AVIN pin, a small value resistor is recommended to be placed between PVIN pin and AVIN.

8.2.1.2.8 Bootstrap Capacitor Selection

A ceramic capacitor with a value of 0.1 µF must be connected between the BOOT and SW pins for proper operation. TI recommends using a ceramic capacitor with X5R or better grade dielectric. The capacitor should have voltage rating of 25 V or higher.

Copyright © 2016, Texas Instruments Incorporated

8.2.1.2.9 R-C Snubber

An R-C snubber must be placed between the switching node and PGND to reduce voltage spikes on the switching node. The power rating of the resistor must be larger than the power dissipation on the resistor with sufficient margin. To balance efficiency and spike level, a 1-nF capacitor and a 1-Ω resistors were selected for this design.

In this example an 0805 resistor was selected, which is rated for 0.125 W.

8.2.1.2.10 Output Voltage Setting and Frequency Compensation Selection

The device uses voltage-mode control with input feedforward. For an in-depth discussion of voltage-mode feedback and control, refer to *Under the Hood of Low-Voltage DC/DC Converters* (SLUP206). Frequency compensation can be accomplished using standard techniques. TI also provides a compensation calculator tool as part of the WEBENCH® selection simulation services to streamline compensation design. The tool provides the recommended compensation components and approximate bode plots. As a starting point, set the crossover frequency to 1/10 f_{SW} and 2 to 5 times the resonant frequency of the output LC filter. The phase margin at crossover should be greater than 45°. The resulting plots should be reviewed for a few common considerations. The error-amplifier gain should not hit the error amplifier gain bandwidth product (GBWP). The error-amplifier gain at the switching frequency region is recommended to be approximately 6 dB in general. The high-frequency capacitor from the COMP to FB pins for this device must be above a typical value of 100 pF to 150 pF to lower the high-frequency gain for stability. Use the tool to calculate the system bode plot at different loading conditions to ensure that the phase does not drop below zero prior to crossover, as this condition is known as conditional stability.

The design tool provides the compensation network values as a start point. Measuring the real-system bode plot after the design and adjusting the compensation values accordingly is always recommended. Table 15 lists the compensation values from the tool calculation and optimization based on the measured data.

Table 15. Frequency Compensation Values

RESISTOR	VALUE (kΩ)	CAPACITOR	VALUE (pF)
R4	10	C12	1200
R3	1.1	C14	2200
R6	5.6	C21	270
RBias	Open	—	—

8.2.1.2.11 Key PMBus Parameter Selection

Some key design parameters for the device can be configured through PMBus, and stored to the non-volatile memory (NVM) for future use.

8.2.1.2.12 Enable, UVLO

The ON_OFF_CONFIG command is used to select the turnon behavior of the converter. For this example, the CNTL pin was used to enable or disable the converter, regardless of the state of OPERATION, as long as the input voltage is present and above the UVLO threshold. The CNTL pin is pulled to the BP6 pin through an internal 6-µA current source if it is floating.

8.2.1.2.13 Soft-Start Time

The TON_RISE command sets the soft-start time. The charging current for the output capacitors must be considered when selecting the soft-start time. In some applications (for example, those with large amounts of output capacitance) this current can lead to false tripping of the overcurrent-protection circuitry if the soft-start time is not properly selected. To avoid false tripping, the output capacitor-charging current should be included when selecting a soft-start time and overcurrent threshold. Use Equation 28 to calculate the capacitor-charging current (I_{CAP}).

$$I_{CAP} = \frac{V_{OUT} \times C_{OUT}}{t_{SS}} = \frac{1\,V \times 1000\,\mu F}{5\,ms} = 0.23\,A \tag{28}$$

In this example, the soft-start time is selected to be the default value of 5 ms. In this case, the charging current, I_{CAP}, is 0.23 A.

Copyright © 2016, Texas Instruments Incorporated

8.2.1.2.14 Overcurrent Threshold and Response

The IOUT_OC_FAULT_LIMIT command sets the overcurrent threshold. The device uses inductor middle current value for overcurrent detecting. The current limit should be set to the maximum load current, plus the output capacitor charging current during start-up, plus some margin for load transients and component variation. The amount of margin required depends on the individual application, but a suggested point is between 20% and 40%. For this application, the maximum load current is 35 A, the output capacitor charging current is 0.44 A. This design allows some extra margin, so an overcurrent threshold of 40 A was selected.

The IOUT_OC_FAULT_RESPONE command sets the desired response to an overcurrent event. In this example, the converter is configured to hiccup in the event of an overcurrent. The device can also be configured to latch in the event of an overcurrent.

Copyright © 2016, Texas Instruments Incorporated

8.2.1.3 Application Curves

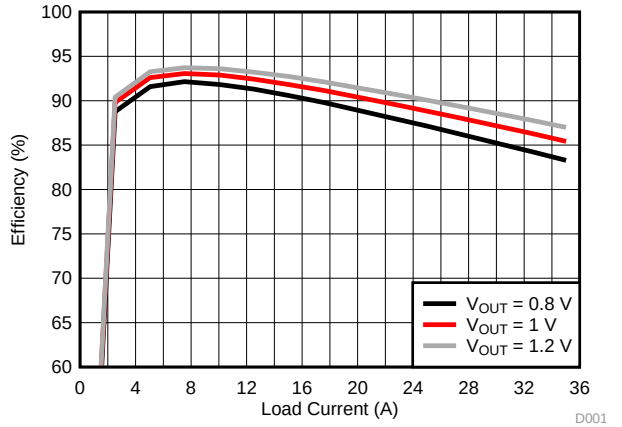

V_{IN} = 5 V L = 300 nH Snubber = 1 nF + 1 Ω
f_{SW} = 300 kHz R_{DCR} = 0.2 mΩ R_{BOOT} = 0 Ω

Figure 40. Efficiency vs Output Current

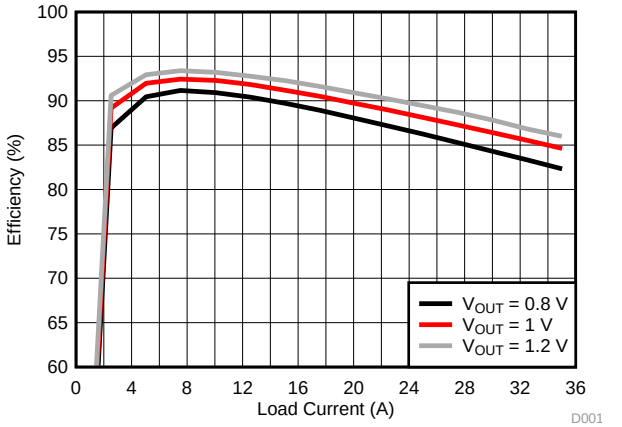

V_{IN} = 5 V L = 300 nH Snubber = 1 nF + 1Ω
f_{SW} = 500 kHz R_{DCR} = 0.2 mΩ R_{BOOT} = 0 Ω

Figure 41. Efficiency vs Output Current

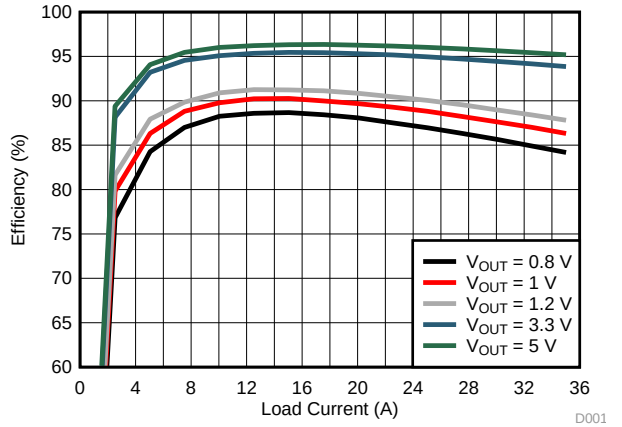

V_{IN} = 12 V L = 300 nH Snubber = 1 nF + 1 Ω
f_{SW} = 300 kHz R_{DCR} = 0.2 mΩ R_{BOOT} = 0 Ω

Figure 42. Efficiency vs Output Current

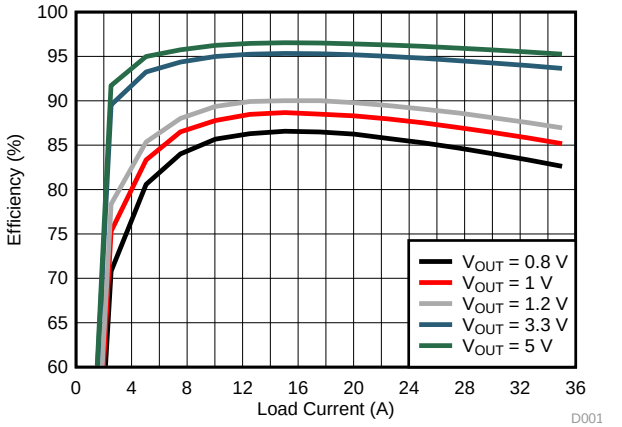

V_{IN} = 12 V L = 300 nH Snubber = 1 nF + 1Ω
f_{SW} = 500 kHz R_{DCR} = 0.2 mΩ R_{BOOT} = 0 Ω

Figure 43. Efficiency vs Output Current

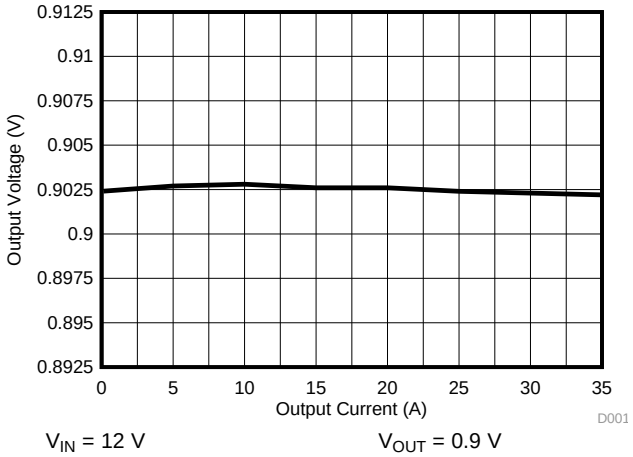

V_{IN} = 12 V V_{OUT} = 0.9 V

Figure 44. Load Regulation

Copyright © 2016, Texas Instruments Incorporated

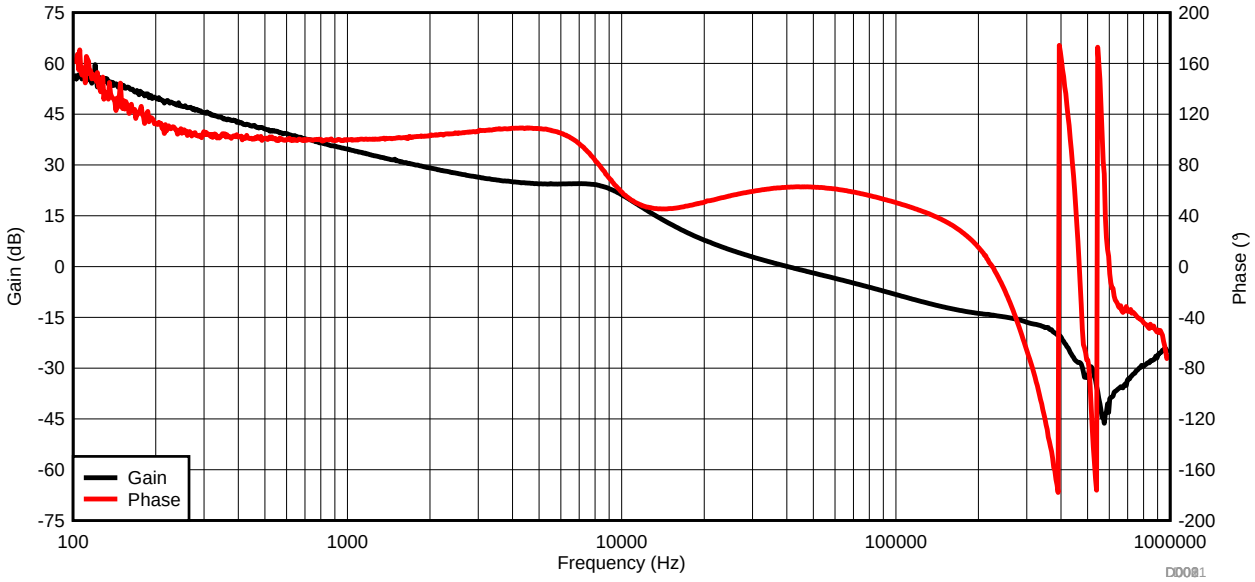

V_{IN} = 12 V V_{OUT} = 0.9 V I_{OUT} = 20 A

Figure 45. Total-Loop Bode Plot

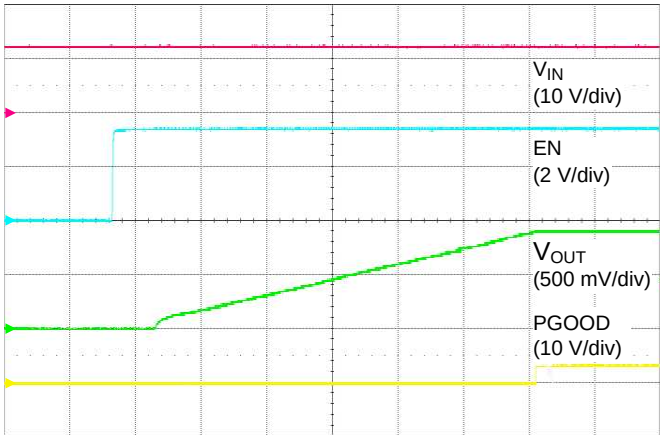

V_{IN} = 12 V V_{OUT} = 0.9 V I_{OUT} = 20 A

Figure 46. Start-Up from CNTL

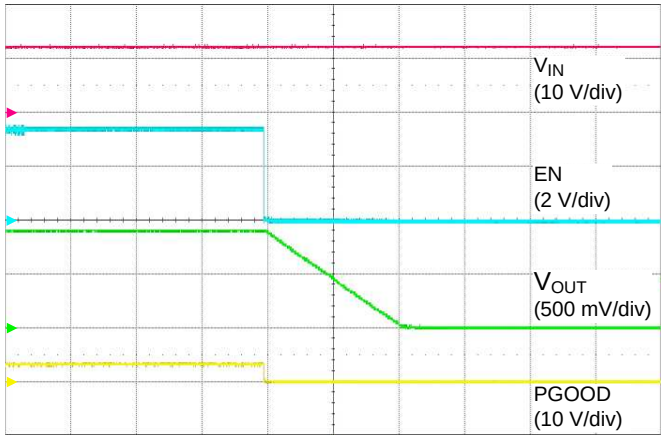

V_{IN} = 12 V V_{OUT} = 0.9 V I_{OUT} = 20 A

Figure 47. Shutdown from CNTL

Copyright © 2016, Texas Instruments Incorporated

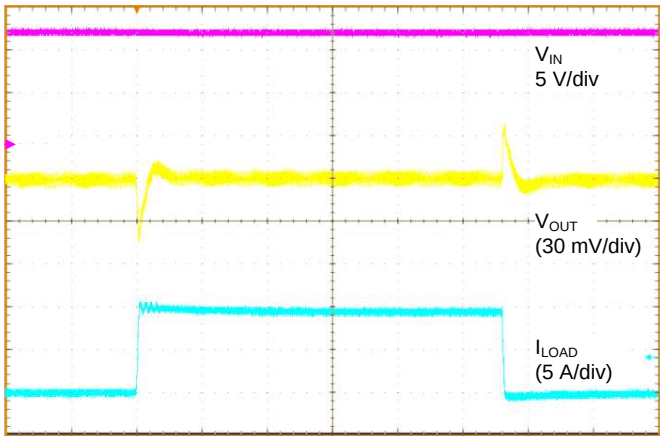

Time (100 µs/div)
V_{IN} = 12 V V_{OUT} = 0.9 V I_{OUT} = 0 A to 10 A, 2.5 A/µs

Figure 48. Load Transient Response

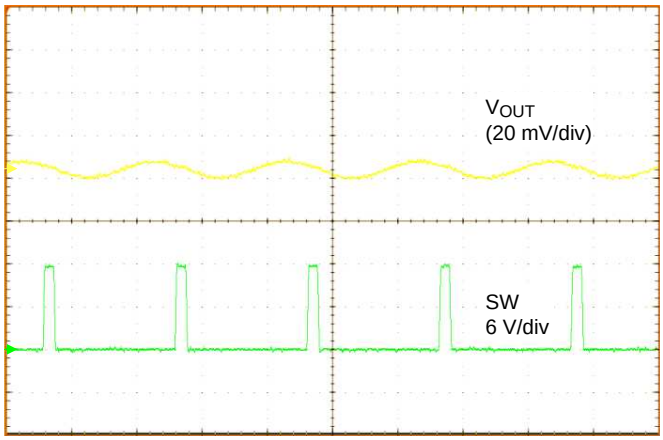

Time (1 µs/div)
V_{IN} = 12 V V_{OUT} = 0.9 V I_{OUT} = 20 A

Figure 49. V_{OUT} Steady-State Ripple

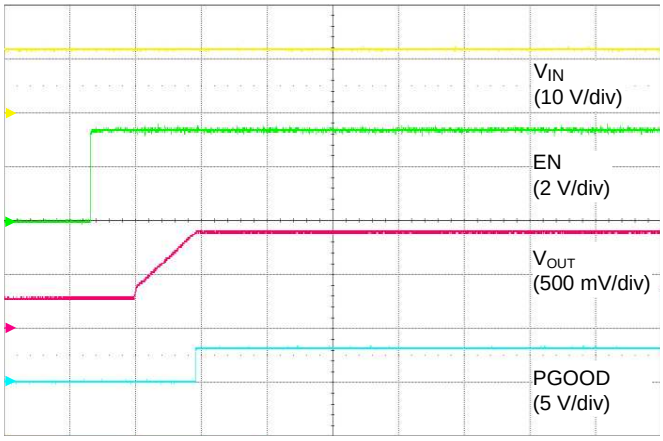

Time (2 ms/div)
V_{IN} = 12 V I_{OUT} = 0 A

Figure 50. Prebiased Start-Up

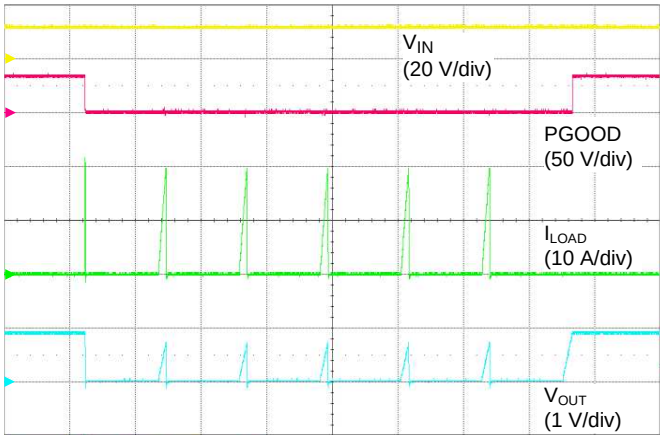

Time (20 ms/div)
V_{IN} = 12 V I_{OUT} = 0 A to 20 A, 20 A to 0 A
Set OCF = 18 A V_{OUT} = 0.9 V

Figure 51. Hiccup Response

版权 © 2016, Texas Instruments Incorporated

9 Power Supply Recommendations

The devices are designed to operate from an input voltage supply between 4.5 V and 18 V. This supply must be well regulated. These devices are not designed for split-rail operation. The PVIN and AVIN pins must be the same potential for accurate high-side short circuit protection. Proper bypassing of input supplies and internal regulators is also critical for noise performance, as is PCB layout and grounding scheme. See the recommendations in the *Layout* section.

10 Layout

10.1 Layout Guidelines

Layout is critical for good power-supply design. 图 52 shows the recommended PCB-layout configuration. A list of PCB layout considerations using these devices is listed as follows:

- As with any switching regulator, several power or signal paths exist that conduct fast switching voltages or currents. Minimize the loop area formed by these paths and their bypass connections.
- Bypass the PVIN pins to PGND with a low-impedance path. The input bypass capacitors of the power-stage should be placed as close as physically possible to the PVIN and PGND pins. Additionally, a high-frequency bypass capacitor in a 0402 package on the PVIN pins can help reduce switching spikes. This capacitor which can be placed on the other side of the PCB directly underneath the device to keep a minimum loop.
- The BP6 bypass capacitor carries a large switching current for the gate driver. Bypassing the BP6 pin to PGND with a low-impedance path is very critical to the stable operation of the devices. Place the BP6 high-frequency bypass capacitors as close as possible to the device pins, with a minimum return loop back to ground.
- The AVIN and BP3 pins also require good local bypassing. Place bypass capacitors as close as possible to the device pins, with a minimum return loop back to ground. This return loop should be kept away from fast switching voltages, the main current path, and the BP6 current path. Poor bypassing on the AVIN and BP3 pins can degrade the performance of the device.
- Keep signal components local to the device, and place them as close as possible to the pins to which they are connected. These components include the feedback resistors and the RT resistor. These components should also be kept away from fast switching voltage and current paths. Those components can be terminated to AGND with a minimum return loop or bypassed to the copper area of a separate low-impedance analog ground (AGND) that is isolated from fast switching voltages and current paths and has single connection to PGND on the thermal pad through the AGND pin. For placement recommendations, see 图 52.
- The PGND pin (pin 26) must be directly connected to the thermal pad of the device on the PCB, with a low-noise, low-impedance path to ensure accurate current monitoring.
- Minimize the SW copper area for best noise performance. Route sensitive traces away from the SW and BOOT pins as these nets contain fast switching voltages and lend easily to capacitive coupling.
- Snubber component placement is critical for effective ringing reduction. These components should be on the same layer as the devices, and be kept as close as possible to the SW and PGND copper areas.
- The PVIN and AVIN pins must be the same potential for accurate short circuit protection, but high-frequency switching noise on the AVIN pin can degrade performance. The AVIN pin should be connected to PVIN through a trace from the input copper area. Optionally form a small low-pass R-C between the PVIN and AVIN pins, with the AVIN bypass capacitor (1 µF) and a 0-2 Ω resistor between the PVIN and AVIN pins. See 图 52 for placement recommendations.
- Route the RSP and RSN lines from the output capacitor bank at the load back to the device pins as a tightly coupled differential pair. These traces must be kept away from switching or noisy areas which can add differential-mode noise.
- Use caution when routing of the SYNC, VSHARE and ISHARE traces for 2-phase configurations. The SYNC trace carries a rail-to-rail signal and should be routed away from sensitive analog signals, including the VSHARE, ISHARE, RT, and FB signals. The VSHARE and ISHARE traces should also be kept away from fast switching voltages or currents formed by the PVIN, AVIN, SW, BOOT, BP6 pins.

版权 © 2016, Texas Instruments Incorporated

10.2 Layout Example

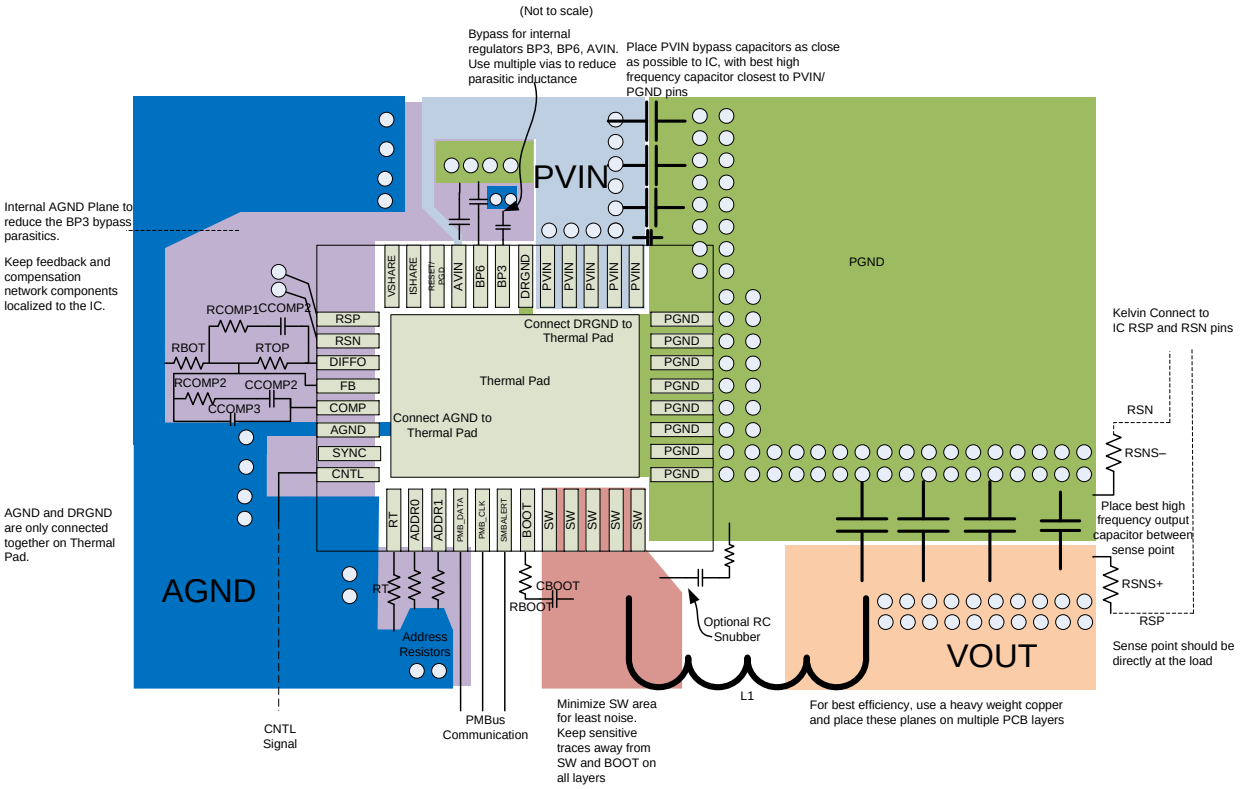

图 52. PCB Layout Recommendation

10.3 Mounting and Thermal Profile Recommendation

Proper mounting technique adequately covers the exposed thermal pad with solder. Excessive heat during the reflow process can affect electrical performance. 图 53 shows the recommended reflow-oven thermal profile. Proper post-assembly cleaning is also critical to device performance. Refer to *QFN/SON PCB Attachment* (SLUA271) for more information.

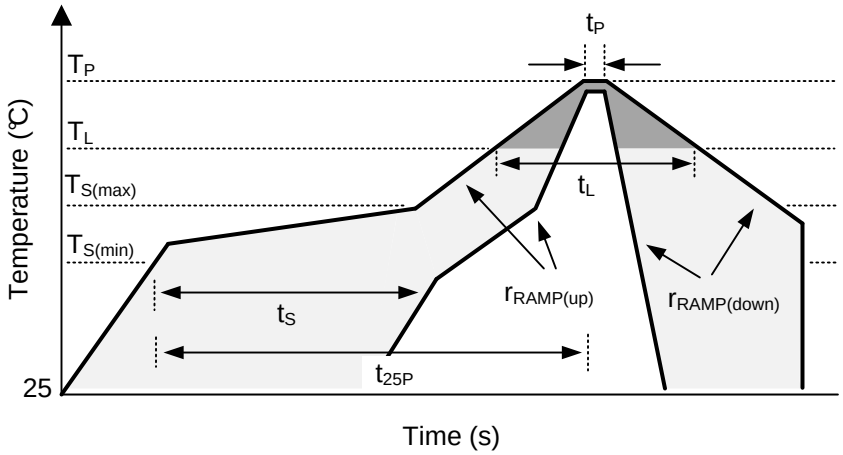

图 53. Recommended Reflow-Oven Thermal Profile

版权 © 2016, Texas Instruments Incorporated

Mounting and Thermal Profile Recommendation (接下页)

表 16. Recommended Thermal Profile Parameters

PARAMETER		MIN	TYP	MAX	UNIT
RAMP UP AND RAMP DOWN					
$r_{RAMP(up)}$	Average ramp-up rate, $T_{S(max)}$ to T_P			3	°C/s
$r_{RAMP(down)}$	Average ramp-down rate, T_P to $T_{S(max)}$			6	°C/s
PRE-HEAT					
T_S	Preheat temperature	150		200	°C
t_S	Preheat time, $T_{S(min)}$ to $T_{S(max)}$	60		180	s
REFLOW					
T_L	Liquidus temperature		217		°C
T_P	Peak temperature			260	°C
t_L	Time maintained above liquidus temperature, T_L	60		150	s
t_P	Time maintained within 5°C of peak temperature, T_P	20		40	s
t_{25P}	Total time from 25°C to peak temperature, T_P			480	s

版权 © 2016, Texas Instruments Incorporated

11 器件和文档支持

11.1 开发支持

11.1.1 德州仪器 (TI) Fusion Digital Power Designer

德州仪器 (TI) Digital Power Designer 能够为 器件提供全面支持。Fusion digital Power Designer 是一款图形用户界面 (GUI)，可使用德州仪器 (TI) USB-to-GPIO 适配器通过 PMBus 配置并监控器件。

单击此链接下载德州仪器 (TI) Fusion Digital Power Designer 软件包。

11.1.2 WEBENCH® 工具

器件由德州仪器 (TI) *WEBENCH® 工具* 提供全面支持。这款在线工具可用于设计电路原理图并计算频率补偿组件。

11.2 接收文档更新通知

如需接收文档更新通知，请访问 www.ti.com.cn 网站上的器件产品文件夹。点击右上角的*提醒我* (Alert me) 注册后，即可每周定期收到已更改的产品信息。有关更改的详细信息，请查阅已修订文档中包含的修订历史记录。

11.3 社区资源

The following links connect to TI community resources. Linked contents are provided "AS IS" by the respective contributors. They do not constitute TI specifications and do not necessarily reflect TI's views; see TI's Terms of Use.

TI E2E™ Online Community ***TI's Engineer-to-Engineer (E2E) Community.*** Created to foster collaboration among engineers. At e2e.ti.com, you can ask questions, share knowledge, explore ideas and help solve problems with fellow engineers.

Design Support ***TI's Design Support*** Quickly find helpful E2E forums along with design support tools and contact information for technical support.

11.4 商标

NexFET, E2E are trademarks of Texas Instruments.
WEBENCH is a registered trademark of Texas Instruments.
符合 PMBus, SMBus are trademarks of System Management Interface Forum (SMIF), Inc..
All other trademarks are the property of their respective owners.

11.5 静电放电警告

这些装置包含有限的内置 ESD 保护。 存储或装卸时，应将导线一起截短或将装置放置于导电泡棉中，以防止 MOS 门极遭受静电损伤。

11.6 Glossary

SLYZ022 — *TI Glossary*.

This glossary lists and explains terms, acronyms, and definitions.

12 机械、封装和可订购信息

以下页中包括机械、封装和可订购信息。这些信息是针对指定器件可提供的最新数据。这些数据会在无通知且不对本文档进行修订的情况下发生改变。欲获得该数据表的浏览器版本，请查阅左侧的导航栏。

版权 © 2016, Texas Instruments Incorporated

PACKAGING INFORMATION

Orderable part number	Status (1)	Material type (2)	Package | Pins	Package qty | Carrier	RoHS (3)	Lead finish/ Ball material (4)	MSL rating/ Peak reflow (5)	Op temp (°C)	Part marking (6)
TPS546C23RVFR	Active	Production	LQFN-CLIP (RVF) | 40	2500 | LARGE T&R	ROHS Exempt	NIPDAU | SN	Level-2-260C-1 YEAR	-40 to 125	TPS546C23
TPS546C23RVFR.A	Active	Production	LQFN-CLIP (RVF) | 40	2500 | LARGE T&R	ROHS Exempt	NIPDAU	Level-2-260C-1 YEAR	-40 to 125	TPS546C23
TPS546C23RVFT	Active	Production	LQFN-CLIP (RVF) | 40	250 | SMALL T&R	ROHS Exempt	NIPDAU | SN	Level-2-260C-1 YEAR	-40 to 125	TPS546C23
TPS546C23RVFT.A	Active	Production	LQFN-CLIP (RVF) | 40	250 | SMALL T&R	ROHS Exempt	NIPDAU	Level-2-260C-1 YEAR	-40 to 125	TPS546C23
TPS546C23RVFTG4	Active	Production	LQFN-CLIP (RVF) | 40	250 | SMALL T&R	ROHS Exempt	NIPDAU	Level-2-260C-1 YEAR	-40 to 125	TPS546C23
TPS546C23RVFTG4.A	Active	Production	LQFN-CLIP (RVF) | 40	250 | SMALL T&R	ROHS Exempt	NIPDAU	Level-2-260C-1 YEAR	-40 to 125	TPS546C23

(1) **Status:** For more details on status, see our product life cycle.

(2) **Material type:** When designated, preproduction parts are prototypes/experimental devices, and are not yet approved or released for full production. Testing and final process, including without limitation quality assurance, reliability performance testing, and/or process qualification, may not yet be complete, and this item is subject to further changes or possible discontinuation. If available for ordering, purchases will be subject to an additional waiver at checkout, and are intended for early internal evaluation purposes only. These items are sold without warranties of any kind.

(3) **RoHS values:** Yes, No, RoHS Exempt. See the TI RoHS Statement for additional information and value definition.

(4) **Lead finish/Ball material:** Parts may have multiple material finish options. Finish options are separated by a vertical ruled line. Lead finish/Ball material values may wrap to two lines if the finish value exceeds the maximum column width.

(5) **MSL rating/Peak reflow:** The moisture sensitivity level ratings and peak solder (reflow) temperatures. In the event that a part has multiple moisture sensitivity ratings, only the lowest level per JEDEC standards is shown. Refer to the shipping label for the actual reflow temperature that will be used to mount the part to the printed circuit board.

(6) **Part marking:** There may be an additional marking, which relates to the logo, the lot trace code information, or the environmental category of the part.

Multiple part markings will be inside parentheses. Only one part marking contained in parentheses and separated by a "~" will appear on a part. If a line is indented then it is a continuation of the previous line and the two combined represent the entire part marking for that device.

Important Information and Disclaimer: The information provided on this page represents TI's knowledge and belief as of the date that it is provided. TI bases its knowledge and belief on information provided by third parties, and makes no representation or warranty as to the accuracy of such information. Efforts are underway to better integrate information from third parties. TI has taken and continues to take reasonable steps to provide representative and accurate information but may not have conducted destructive testing or chemical analysis on incoming materials and chemicals. TI and TI suppliers consider certain information to be proprietary, and thus CAS numbers and other limited information may not be available for release.

In no event shall TI's liability arising out of such information exceed the total purchase price of the TI part(s) at issue in this document sold by TI to Customer on an annual basis.

TAPE AND REEL INFORMATION

REEL DIMENSIONS

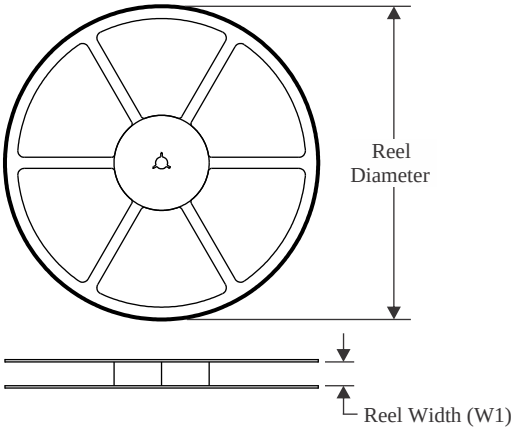

TAPE DIMENSIONS

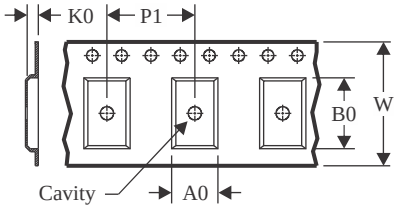

A0	Dimension designed to accommodate the component width
B0	Dimension designed to accommodate the component length
K0	Dimension designed to accommodate the component thickness
W	Overall width of the carrier tape
P1	Pitch between successive cavity centers

QUADRANT ASSIGNMENTS FOR PIN 1 ORIENTATION IN TAPE

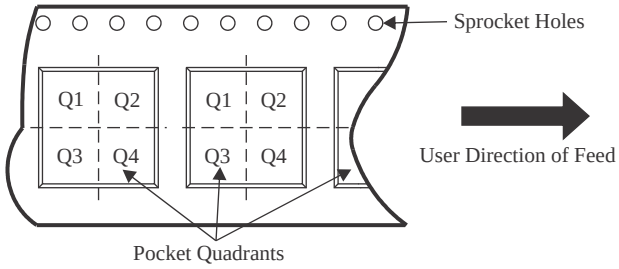

*All dimensions are nominal

Device	Package Type	Package Drawing	Pins	SPQ	Reel Diameter (mm)	Reel Width W1 (mm)	A0 (mm)	B0 (mm)	K0 (mm)	P1 (mm)	W (mm)	Pin1 Quadrant
TPS546C23RVFR	LQFN-CLIP	RVF	40	2500	330.0	16.4	5.35	7.35	1.7	8.0	16.0	Q1
TPS546C23RVFT	LQFN-CLIP	RVF	40	250	180.0	16.4	5.35	7.35	1.7	8.0	16.0	Q1
TPS546C23RVFTG4	LQFN-CLIP	RVF	40	250	180.0	16.4	5.35	7.35	1.7	8.0	16.0	Q1

TAPE AND REEL BOX DIMENSIONS

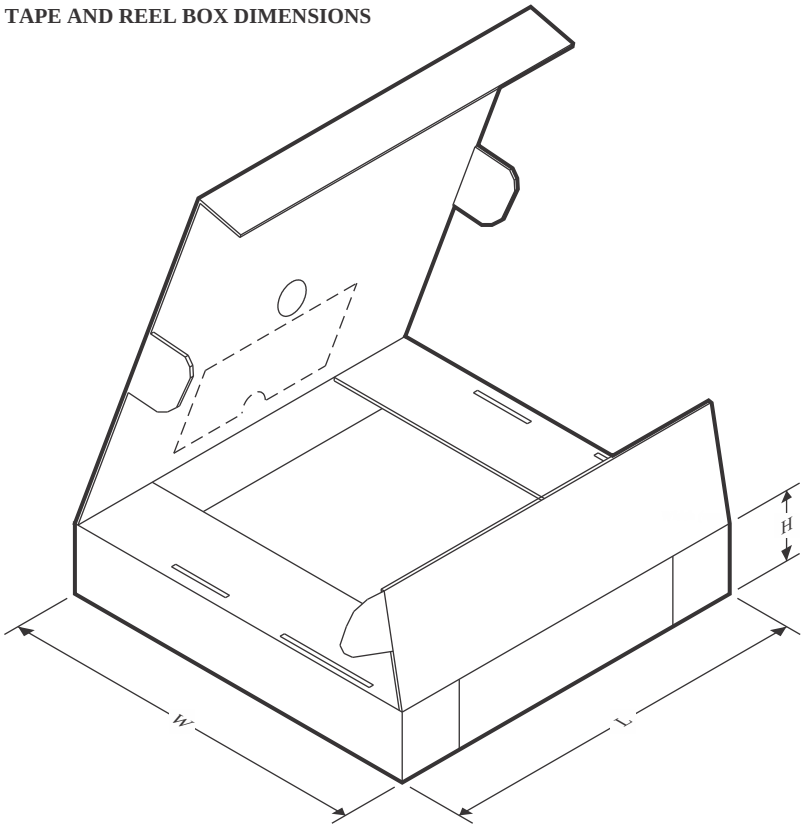

*All dimensions are nominal

Device	Package Type	Package Drawing	Pins	SPQ	Length (mm)	Width (mm)	Height (mm)
TPS546C23RVFR	LQFN-CLIP	RVF	40	2500	367.0	367.0	38.0
TPS546C23RVFT	LQFN-CLIP	RVF	40	250	210.0	185.0	35.0
TPS546C23RVFTG4	LQFN-CLIP	RVF	40	250	210.0	185.0	35.0

RVF 40 LQFN-CLIP - 1.52 mm max height

PLASTIC QUAD FLATPACK - NO LEAD

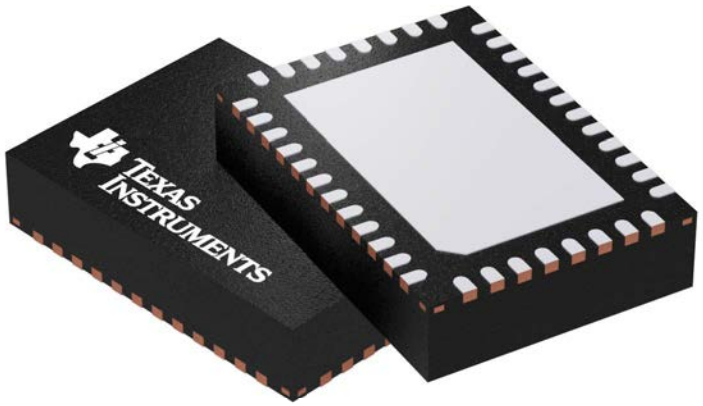

Images above are just a representation of the package family, actual package may vary.
Refer to the product data sheet for package details.

PACKAGE OUTLINE

RVF0040A

LQFN-CLIP - 1.52 mm max height

PLASTIC QUAD FLATPACK - NO LEAD

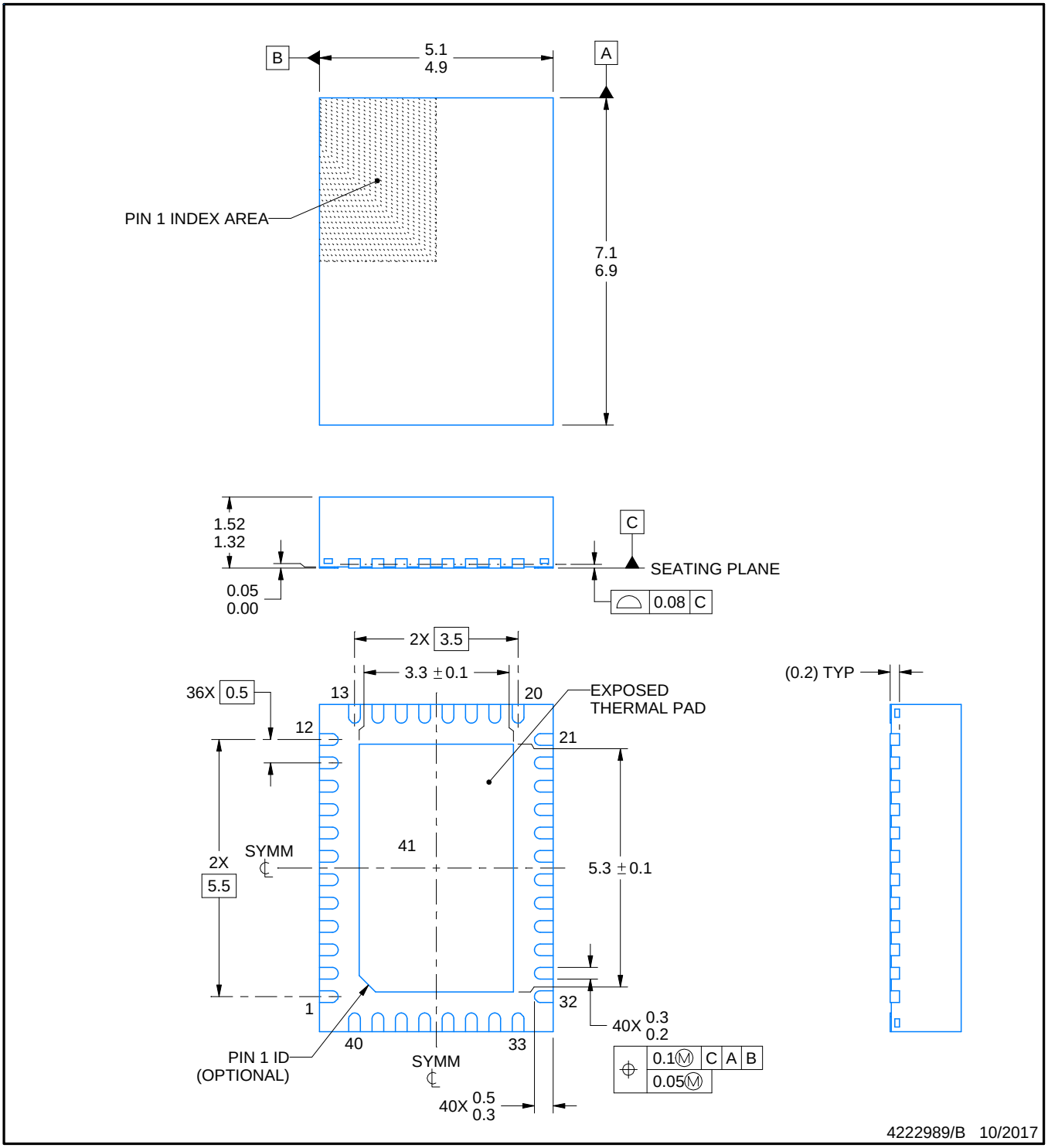

NOTES:

1. All linear dimensions are in millimeters. Any dimensions in parenthesis are for reference only. Dimensioning and tolerancing per ASME Y14.5M.
2. This drawing is subject to change without notice.
3. The package thermal pad must be soldered to the printed circuit board for thermal and mechanical performance.
4. Reference JEDEC registration MO-220.

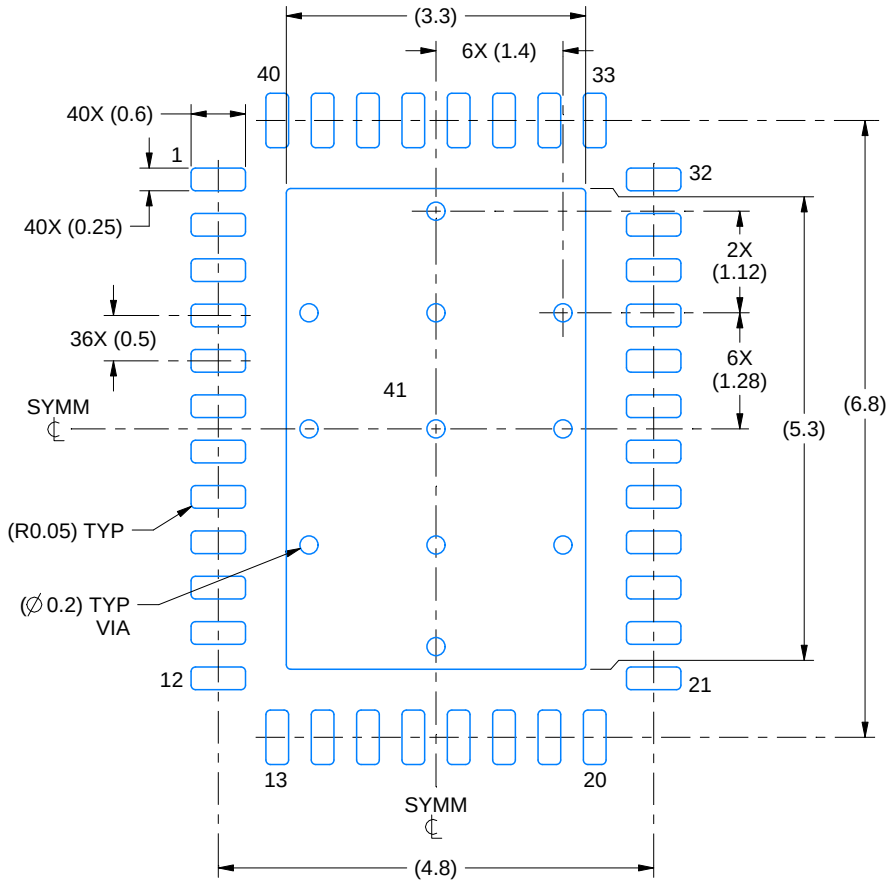

LAND PATTERN EXAMPLE
SCALE:12X

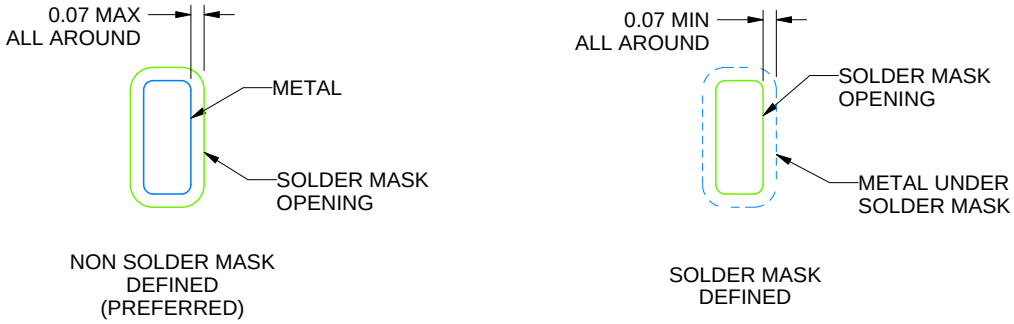

SOLDER MASK DETAILS

4222989/B 10/2017

NOTES: (continued)

5. This package is designed to be soldered to a thermal pad on the board. For more information, see Texas Instruments literature number SLUA271 (www.ti.com/lit/slua271).

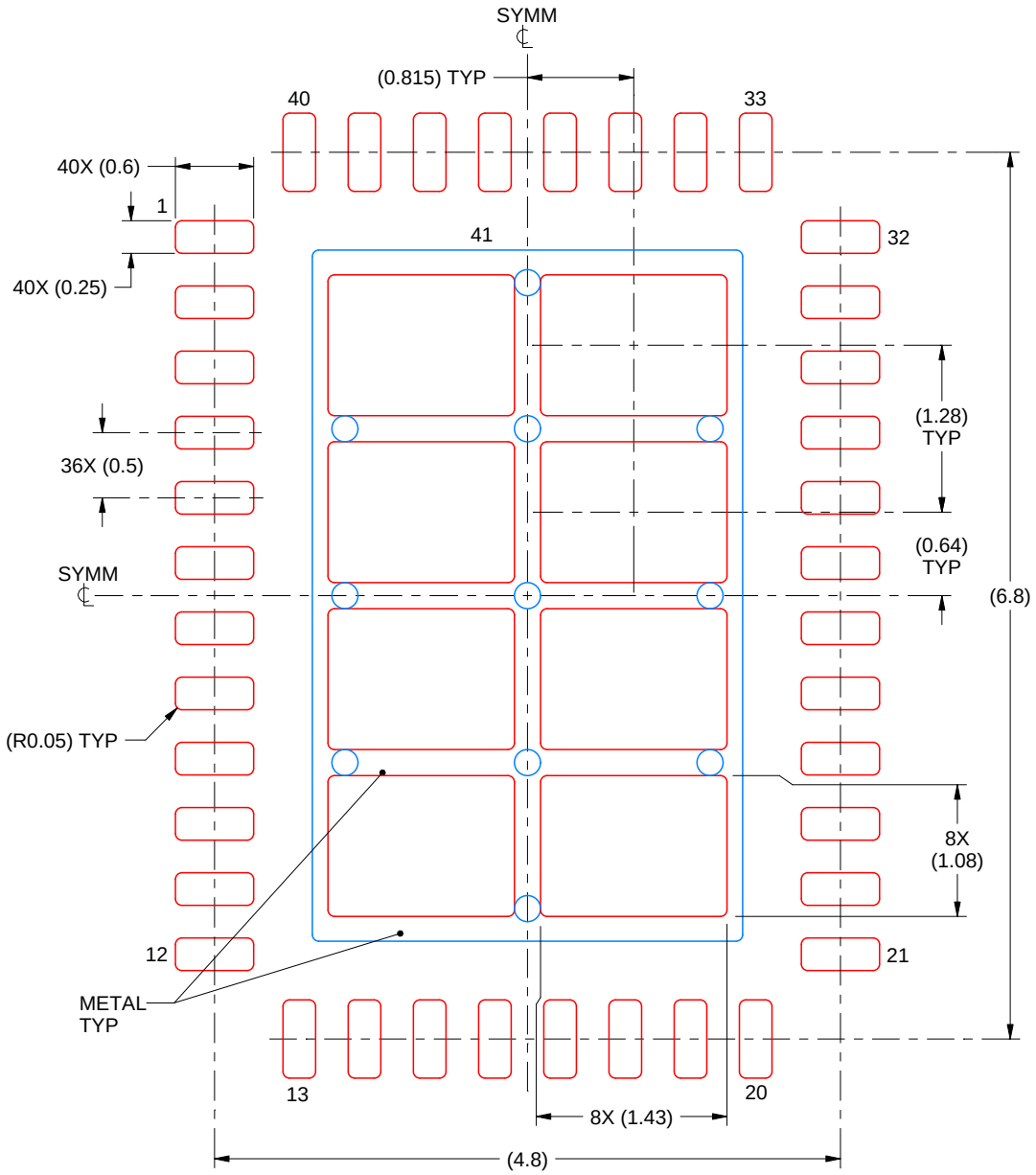

SOLDER PASTE EXAMPLE
BASED ON 0.125 mm THICK STENCIL

EXPOSED PAD
71% PRINTED SOLDER COVERAGE BY AREA
SCALE:18X

4222989/B 10/2017

NOTES: (continued)

6. Laser cutting apertures with trapezoidal walls and rounded corners may offer better paste release. IPC-7525 may have alternate design recommendations.

重要通知和免责声明

TI“按原样”提供技术和可靠性数据（包括数据表）、设计资源（包括参考设计）、应用或其他设计建议、网络工具、安全信息和其他资源，不保证没有瑕疵且不做出任何明示或暗示的担保，包括但不限于对适销性、与某特定用途的适用性或不侵犯任何第三方知识产权的暗示担保。

这些资源可供使用 TI 产品进行设计的熟练开发人员使用。您将自行承担以下全部责任：(1) 针对您的应用选择合适的 TI 产品，(2) 设计、验证并测试您的应用，(3) 确保您的应用满足相应标准以及任何其他安全、安保法规或其他要求。

这些资源如有变更，恕不另行通知。TI 授权您仅可将这些资源用于研发本资源所述的 TI 产品的相关应用。严禁以其他方式对这些资源进行复制或展示。您无权使用任何其他 TI 知识产权或任何第三方知识产权。对于因您对这些资源的使用而对 TI 及其代表造成的任何索赔、损害、成本、损失和债务，您将全额赔偿，TI 对此概不负责。

TI 提供的产品受 TI 销售条款)、TI 通用质量指南 或 ti.com 上其他适用条款或 TI 产品随附的其他适用条款的约束。TI 提供这些资源并不会扩展或以其他方式更改 TI 针对 TI 产品发布的适用的担保或担保免责声明。 除非德州仪器 (TI) 明确将某产品指定为定制产品或客户特定产品，否则其产品均为按确定价格收入目录的标准通用器件。

TI 反对并拒绝您可能提出的任何其他或不同的条款。

版权所有 © 2026，德州仪器 (TI) 公司

最后更新日期：2025 年 10 月