Product Number: 316-93-147-41-008000

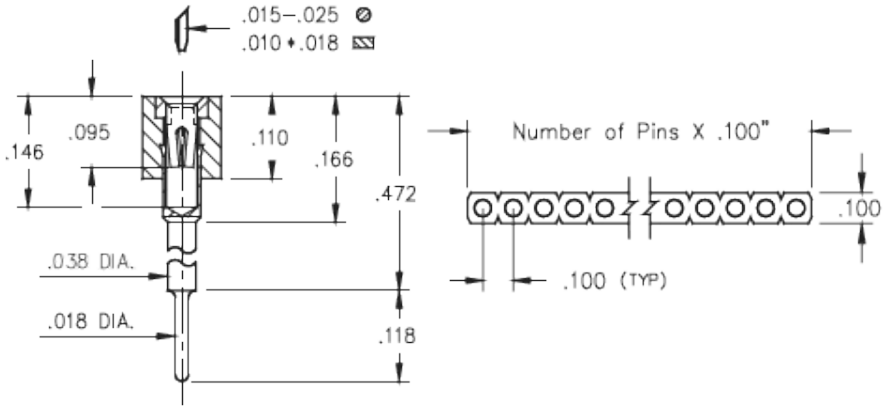

Description:
Interconnect Socket
Elevated Strip Socket
Accepts .015"- .025" (0,38 - 0,635 mm) dia leads
Single Row
Through Hole
Plating Code:
93
Shell Plating:
200 µ" Tin/Lead(93/7) over 100 µ" Nickel
Inner Contact Plating:
30 µ" Gold over 50 µ" Nickel

# Of Pins	Mill-Max Part Number	RoHS Compliant
47	316-93-147-41-008000	NO

CONTACT:

Contact Used: #30, Standard 4 Finger Contact

Current Rating = 3 Amps

BERYLLIUM COPPER ALLOY 172 (UNS C17200) per ASTM B 194

Properties of BERYLLIUM COPPER:

- Chemical composition: Cu 98.1%, Be 1.9%
- Temper as stamped: TD01
- Properties after heat treatment (TH01):
- Hardness: 36-43 Rockwell C
- Mechanical Life: 1000 Cycles Min.
- Density: .298 lbs/in3
- Electrical Conductivity: 22% IACS*
- Resistance: 10 miliohms Max
- Operating Temperature: -55°C/+125°C
- Melting point: 980°C/865°C (liquidus/solidus)
- Stress Relaxation†: 96% of stress remains after 1,000 hours @ 100 °C; 70% of stress remains after 1,000 hours @ 200 °C

*International Annealed Copper Standard, i.e. as a % of pure copper.

†Since BeCu loses its spring properties over time at high temperatures; it is rated for continuous use up to 150°C. For applications up to 300°C, Mill-Max offers many contacts in Beryllium Nickel. Contact Tech Support for more info.

LOOSE PIN:

Pin Used: 0153 (Brass Alloy)

BRASS ALLOY 360 per ASTM B 16, or 385 per ASTM B455

Properties of BRASS ALLOY 360 ASTM B 16:

- Chemical composition: Cu 63% (max), Pb 3.7% (max)†, Fe .35% (max), Zn remainder
- Temper as machined: H02/H04
- Yield Strength: 25-45 ksi
- Tensile strength: 57-80 ksi
- Hardness as machined: 80-90 Rockwell B
- Electrical conductivity: 26% IACS*
- Melting point: 1000°C/840°C (liquidus/solidus)

Properties of BRASS ALLOY 385 ASTM B 455:

- Chemical composition: Cu 60% (max), Pb 3.5% (max)†, Fe .35% (max), Zn remainder
- Temper as machined: H02/H04
- Yield Strength: 16 ksi(min)
- Tensile strength: 48 ksi(min)
- Hardness as machined: 80-90 Rockwell B
- Electrical conductivity: 28% IACS*
- Melting point: 1000°C/840°C (liquidus/solidus)

After machining, brass parts are often annealed (softened) for subsequent bending, swaging or crimping. A partial anneal down to 60±10 RB is recommended for 90° bends, a full anneal down to 35±15 RB is recommended for pins or terminals that are swaged (riveted) to a circuit board or crimped to a wire.

†RoHS-2 directive 2011/65/EU, exemption 6c allows up to 4% lead as an alloy agent in copper.

*International Annealed Copper Standard, i.e. as a % of pure copper.

INSULATOR INFORMATION:

PCT Polyester, (Thermx CG933, black)

High Temperature

Properties of PCT Polyester:

- Brand: Thermx
- Grade: CG-933
- Rated voltage: 100 VRMS/150 VDC
- Insulation resistance: 10,000 Megaohms min.
- Material Heat Deflection Temp (per ASTM D 648): 529°F (276°C) @ 66 psi
- Dielectric strength: 1000 VRMS min. (700 VRMS min. for series 117 Shrink DIP)

Note: Materials above 446°F (230°C) are considered suitable for "eutectic" reflow soldering, above 500°F (260°C) for "lead-free" reflow soldering.

Certificate of Compliance:

This is to Certify that the product described above is manufactured to Mill-Max quality standards in accordance with all applicable specifications and drawing. Mill-Max certifies this product to be free from defects of materials and workmanship.

This Certificate of Compliance covers the following requirements:

- Dimensional (all features verified to be within tolerances described on the applicable drawing).
- Raw Material (materials and properties verified to be as described on the applicable drawing).
- Plating (platings as required, thickness verified, and performance including solderability per mil-standard).
- Performance (insertion extraction or other force requirements as described on the applicable drawing).

Compliance Statement for Registration, Evaluation, Authorization and Restriction of Chemicals (REACH)

Reference:

1. Regulation EC No 1907/2006 of the European Parliament and of the Council of 18 December 2006, concerning the Registration, Evaluation, Authorization and Restriction of Chemicals (REACH)

2. ECHA, Candidate list of Substances of Very High Concern (SVHC) http://echa.europa.eu/reach_en.asp

Mill-Max is aware of the regulation and the SVHC list the EU published (referenced above). Mill-Max does not produce or sell any of the listed substances in their homogeneous form. These substances are not intentionally added during the manufacturing of any Mill-Max products. To our knowledge, our products do not contain the substances described on the ECHA SVHC list. Testing is not performed for materials and substances that were not intentionally added. No warranty, liability of indemnification is expressed or implied with this information. Mill-Max maintains surveillance of the ECHA website to obtain the latest information and periodically reviews the SVHC list for changes and additions.

Compliance Statement for DRC Conflict Free products.

Reference:

Dodd-Frank Wall Street Reform and Consumer Protection Act, Section 1502, reporting requirements for users of conflict minerals.

"Conflict minerals," are Columbite-tantalite (coltan), cassiterite, gold, wolframite, or their derivatives; or any other mineral or its derivatives determined by the Secretary of State to be financing conflict in the Democratic Republic of the Congo (DRC) or an adjoining country. Metals derived from these minerals are tin, tantalum, tungsten, and gold. By this definition, the only minerals of concern that may be found in Mill-Max products are tin and gold.

Mill-Max Mfg.Corp. hereby certifies that its products are manufactured with tin and gold that is derived from material that is considered DRC Conflict Free. Mill-Max provides this assurance as a result of a due diligence process that includes traceability to the source and in some cases the identification of recycled and scrap materials included in the subject material.