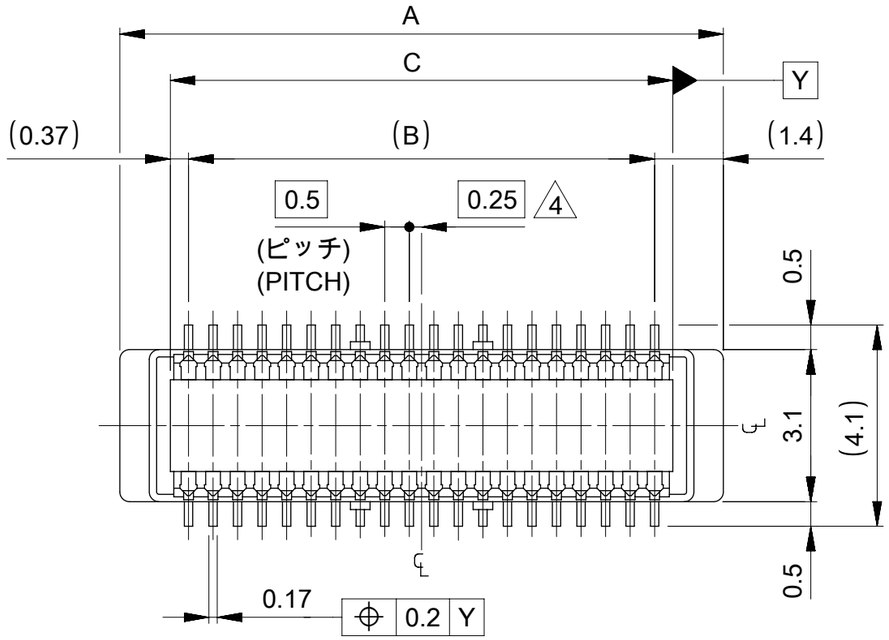

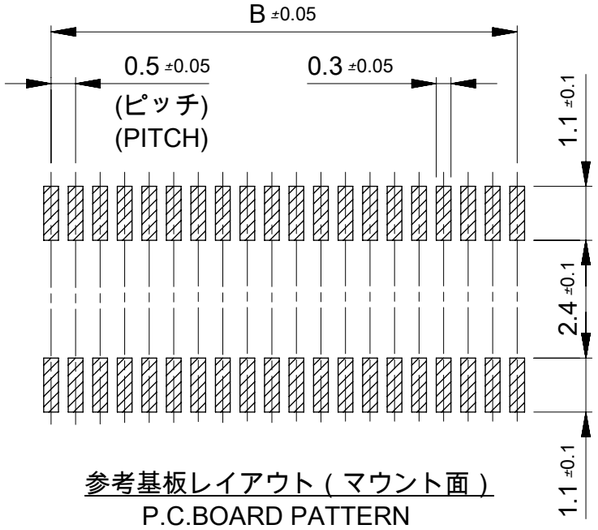

参考基板レイアウト (マウント面)
P.C.BOARD PATTERN
DIMENSION. (REF.)
(MOUNTING AREA)

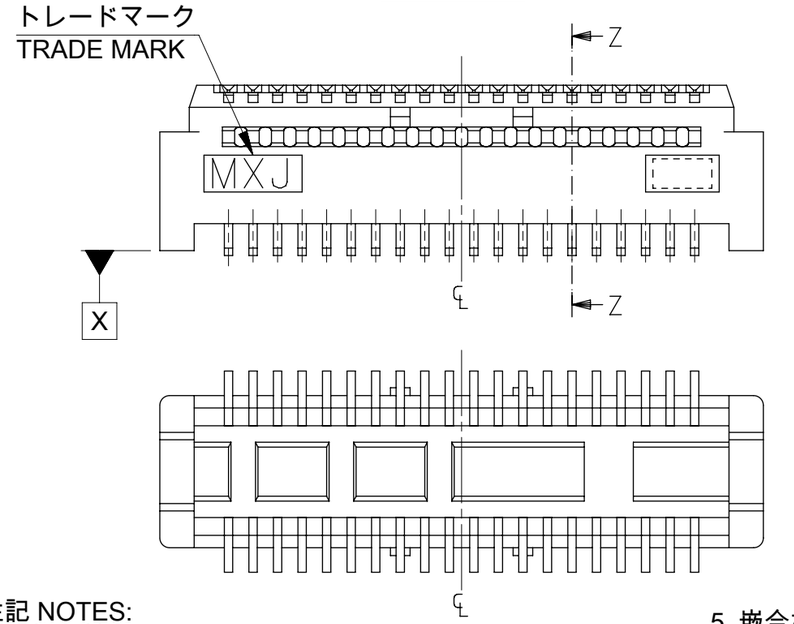

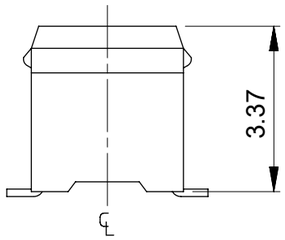

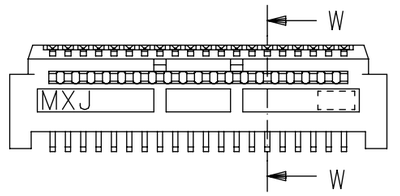

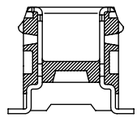

SECT.W-W

60極品以上形状図
SHAPE OF OVER 60CKT.

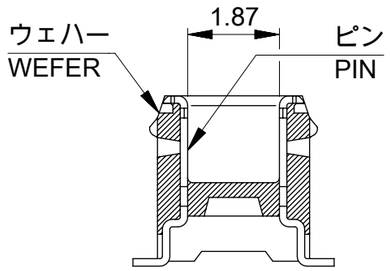

SECT.Z-Z

注記 NOTES:

1. 使用材料 MATERIAL
   ハウジング：ＬＣＰガラス入り (黒) ,UL94V-0
   HOUSING :LCP(G.F.)(COLOR :BLACK),UL94V-0
   ピン：黄銅 (t=0.15)
   PIN: BRASS(t=0.15)
2. メッキ仕様 PLATING
   全体仕上げ：金メッキ 0.1 MICROMETER MIN.
   ALL OVER : GOLD 0.1 MICROMETER MIN.
   下地メッキ：ニッケルメッキ 1.5 MICROMETER MIN.
   UNDER PLATNG : NICKEL 1.5 MICROMETER MIN.
3. 基準面 X からのソルダーテールの半田付け面のズレ量は、上方向 0
   下方向0.15MAX.とする。
   MISALIGNMENT OF SOLDER TAIL FROM X
   : UPPER DRECTION 0, LOWER DIRECTION 0.15 MAX.
4. (全極数/2) = 偶数の場合に適用。
   APPLY FOR (CIRCUIT/2)=EVEN.
5. 嵌合相手： 52991シリーズ (嵌合高さ = 4mm)、54167シリーズ (嵌合高さ = 4mm)
   MATE WITH: 52991 SERIES (HEIGHT = 4mm), AND 54167 SERIES (HEIGHT = 4mm)
6. テール平坦度は、0.1MAX.
   TAIL COPLANARITY TO BE 0.1MAX.

20.24	19.5	22.3	53916-0808	80
5.24	4.5	7.3	53916-0208	20
C	B	A	EMBOSSED TAPE	極数 CIRCUIT
			ORDER No.	
CONNECTOR SERIES No.			53916-***1	

THIS DRAWING CONTAINS INFORMATION THAT IS PROPRIETARY TO MOLEX ELECTRONIC TECHNOLOGIES, LLC AND SHOULD NOT BE USED WITHOUT WRITTEN PERMISSION

GENERAL TOLERANCES (UNLESS SPECIFIED)	
10^{UNDER}	±0.2
$10^{OVER}30^{UNDER}$	±0.25
30^{OVER}	±0.3
ANGULAR	±3°
DRAFT WHERE APPLICABLE MUST REMAIN WITHIN DIMENSIONS	

DIMENSION UNITS	SCALE
mm	---

GENERAL TOLERANCES (UNLESS SPECIFIED)		
ANGULAR TOL	±	1.0 °
4 PLACES	±	0.2
3 PLACES	±	0.25
2 PLACES	±	0.3
1 PLACE	±	
0 PLACES	±	
DRAFT WHERE APPLICABLE MUST REMAIN WITHIN DIMENSIONS		

CURRENT REV DESC: REMOVED OBSOLETED PART NUMBERS AS PER PCN#514995.

EC NO: 820689
DRWN: RAVINR1 2025/03/26
CHK'D: GB 2025/05/21
APPR: GB 2025/05/21

INITIAL REVISION:
DRWN: S . A I HARA 1996/11/28
APPR: M . SASAO 2001/12/26

THIRD ANGLE PROJECTION | DRAWING: A3-SIZE | SERIES: 53916

molex

0.5 MM PITCH B-TO-B CONN.
HEIGHT = 4 PLUG

PRODUCT CUSTOMER DRAWING

DOCUMENT NUMBER	DOC TYPE	DOC PART	REVISION
SD-53916-001	PSD	001	D1

MATERIAL NUMBER	CUSTOMER	SHEET NUMBER
SEE TABLE	GENERAL	1 OF 2

DOCUMENT STATUS	P1	RELEASE DATE	2025/05/21 02:33:14

FORMAT: master-tb-prod-A3
REVISION: J1
DATE: 2021/05/01

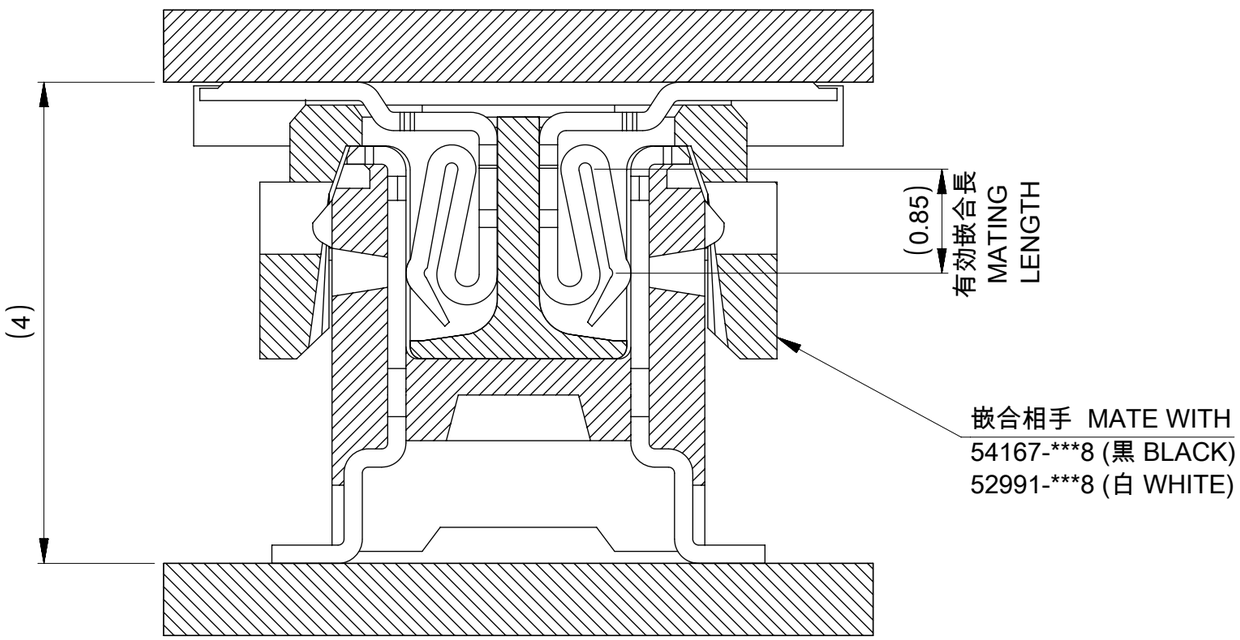

嵌合断面図（参考）
MATED DRAWING (REF.)

THIS DRAWING CONTAINS INFORMATION THAT IS PROPRIETARY TO MOLEX ELECTRONIC TECHNOLOGIES, LLC AND SHOULD NOT BE USED WITHOUT WRITTEN PERMISSION

GENERAL TOLERANCES (UNLESS SPECIFIED)	
10^{UNDER}	±0.2
$10^{OVER}30^{UNDER}$	±0.25
30^{OVER}	±0.3
ANGULAR	±3°
DRAFT WHERE APPLICABLE MUST REMAIN WITHIN DIMENSIONS	

DIMENSION UNITS	SCALE
mm	---

GENERAL TOLERANCES (UNLESS SPECIFIED)	
ANGULAR TOL	± 3.0 °
4 PLACES	± 0.2
3 PLACES	± 0.25
2 PLACES	± 0.3
1 PLACE	±
0 PLACES	±
DRAFT WHERE APPLICABLE MUST REMAIN WITHIN DIMENSIONS	

CURRENT REV DESC: REMOVED OBSOLETED PART NUMBERS AS PER PCN#514995.

EC NO: 820689
DRWN: RAVINR1 2025/03/26
CHK'D: GB 2025/05/21
APPR: GB 2025/05/21

INITIAL REVISION:
DRWN: S . A I HARA 1996/11/28
APPR: M . SASAO 2001/12/26

molex

0.5 MM PITCH B-TO-B CONN.
HEIGHT = 4 PLUG

PRODUCT CUSTOMER DRAWING

DOCUMENT NUMBER	DOC TYPE	DOC PART	REVISION
SD-53916-001	PSD	001	D1

THIRD ANGLE PROJECTION	DRAWING	SERIES	MATERIAL NUMBER	CUSTOMER	SHEET NUMBER
	A3-SIZE	53916	SEE TABLE	GENERAL	2 OF 2

DOCUMENT STATUS	P1	RELEASE DATE	2025/05/21 02:33:14

FORMAT: master-lb-prod-A3
REVISION: J1
DATE: 2021/05/01

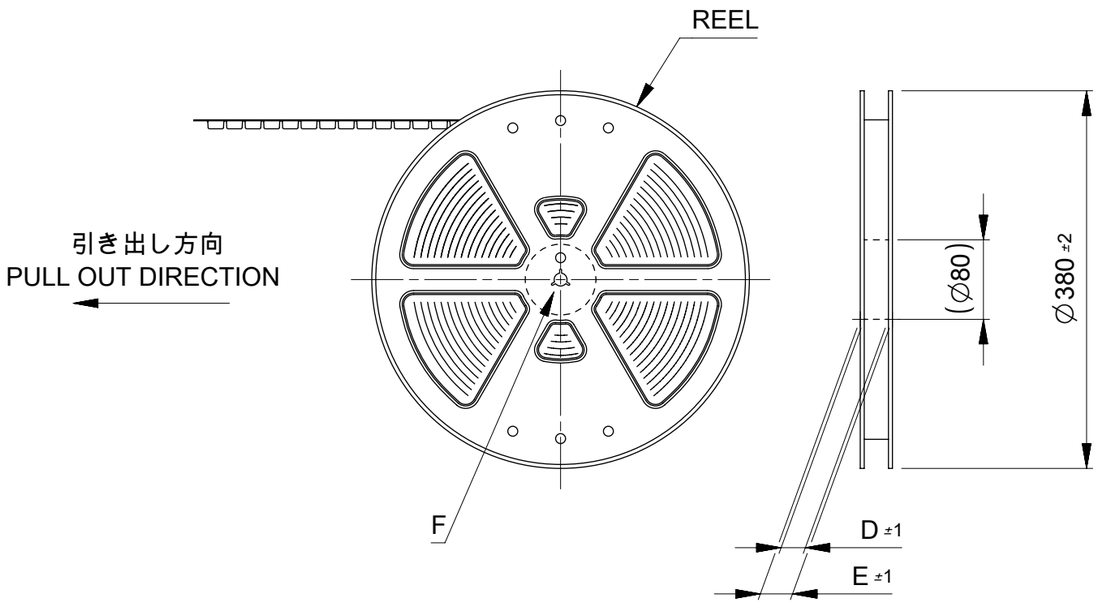

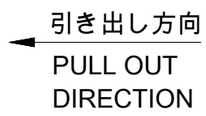

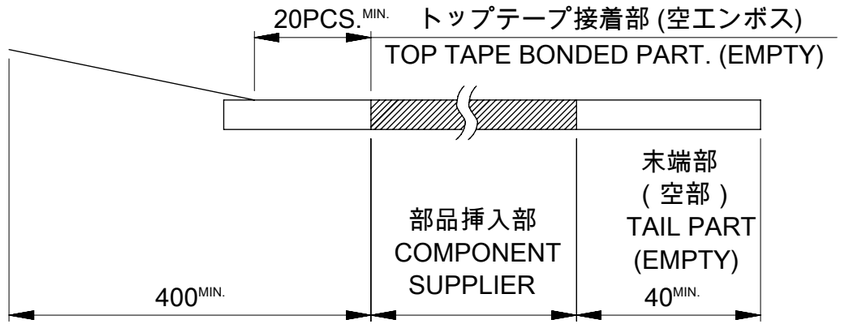

NOTES

1. 製品詳細寸法については図面 SD-53916-001を参照下さい。
   DETAIL DIMENSION, SEE SD-53916-001
2. 梱包数量 : 1500個 / リール
   NUMBER OF CONNECTORS : 1500PCS/REEL
3. リードテープ長さ LEAD TAPE LENGTH
4. カバーテープの剥離強度については、IEC60286-3に準拠
   COVER TAPE PEEL FORCE IS DEFINED BY IEC60286-3.
5. 材料 (MATERIAL)
   キャリアテープ (CARRIER TAPE) : ポリプロピレン (POLYPROPYLENE)
   トップテープ (TOPTAPE) : PET , PE , PEF
   リール (REEL) : ポリスチレン (PS) <リサイクル材を含む >
   POLYSTYREN(PS) <RECYCLE MATERIAL CONTANED>

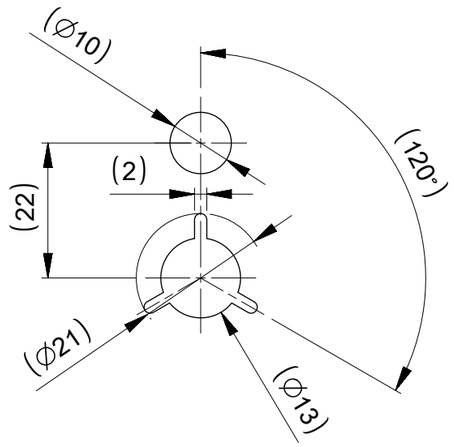

DETAIL "F"

GENERAL TOLERANCES (UNLESS SPECIFIED)	
10 UNDER	±0.2
10 OVER 30 UNDER	±0.25
30 OVER	±0.3
ANGULAR±3°	
DRAFT WHERE APPLICABLE MUST REMAIN WITHIN DIMENSIONS	

GENERAL TOLERANCES (UNLESS SPECIFIED)		
ANGULAR TOL	±	3.0 °
4 PLACES	±	0.2
3 PLACES	±	0.25
2 PLACES	±	0.3
1 PLACE	±	
0 PLACES	±	
DRAFT WHERE APPLICABLE MUST REMAIN WITHIN DIMENSIONS		

THIS DRAWING CONTAINS INFORMATION THAT IS PROPRIETARY TO MOLEX ELECTRONIC TECHNOLOGIES, LLC AND SHOULD NOT BE USED WITHOUT WRITTEN PERMISSION

DIMENSION UNITS: mm | SCALE: ---

CURRENT REV DESC: REMOVED OBSOLETED PART NUMBERS AS PER PCN#514995.

EC NO: 820689
DRWN: RAVINR1 2025/03/26
CHK'D: GB 2025/05/21
APPR: GB 2025/05/21

INITIAL REVISION:
DRWN: S . A I HARA 1996/11/27
APPR: M.FUKUSHIMA 2001/01/26

molex

0.5 MM PITCH B-TO-B CONN.
HEIGHT = 4 PLUG EMBOSS TAPE PACKAGE

PRODUCT CUSTOMER DRAWING

DOCUMENT NUMBER	DOC TYPE	DOC PART	REVISION
SD-53916-002	PSD	001	H1

THIRD ANGLE PROJECTION	DRAWING	SERIES	MATERIAL NUMBER	CUSTOMER	SHEET NUMBER
	A3-SIZE	53916	SEE TABLE	GENERAL	1 OF 3

DOCUMENT STATUS	P1	RELEASE DATE	2025/05/21 02:33:14

FORMAT: master-tb-prod-A3
REVISION: J1
DATE: 2021/05/01

引き出し方向
PULL OUT DIRECTION

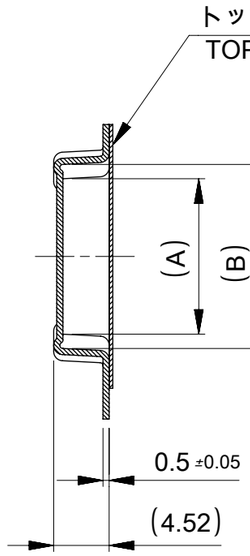

SECT:Y-Y

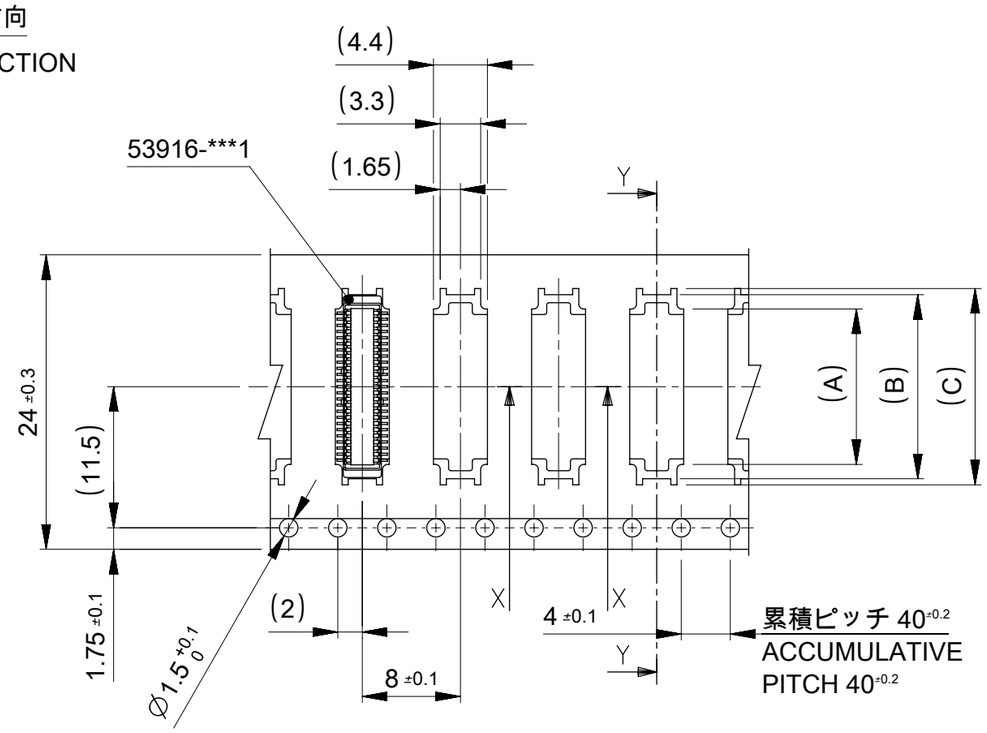

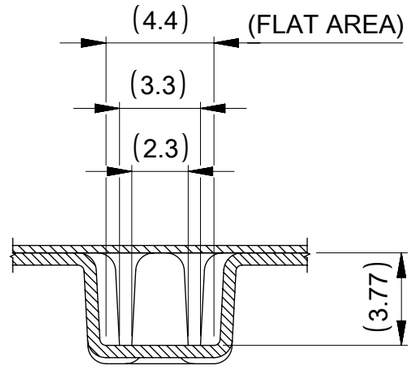

SECT:X-X

24mm 幅キャリアテープ
24mm WIDTH CARRIER TAPE

24	29.4	25.4	8.5	7.5	5.17	53916-0208	20
キャリアテープ幅 CARRIER TAPE WIDTH	E	D	(C)	(B)	(A)	MATERIAL NO.	極数 CIRCUIT

THIS DRAWING CONTAINS INFORMATION THAT IS PROPRIETARY TO MOLEX ELECTRONIC TECHNOLOGIES, LLC AND SHOULD NOT BE USED WITHOUT WRITTEN PERMISSION

GENERAL TOLERANCES (UNLESS SPECIFIED)	
10^{UNDER}	±0.2
$10^{OVER}30^{UNDER}$	±0.25
30^{OVER}	±0.3
ANGULAR	±3°
DRAFT WHERE APPLICABLE MUST REMAIN WITHIN DIMENSIONS	

DIMENSION UNITS	SCALE
mm	---

GENERAL TOLERANCES (UNLESS SPECIFIED)	
ANGULAR TOL	± 30 '
4 PLACES	± 0.2
3 PLACES	± 0.25
2 PLACES	± 0.3
1 PLACE	±
0 PLACES	±
DRAFT WHERE APPLICABLE MUST REMAIN WITHIN DIMENSIONS	

CURRENT REV DESC: REMOVED OBSOLETED PART NUMBERS AS PER PCN#514995.

EC NO: 820689
DRWN: RAVINR1 2025/03/26
CHK'D: GB 2025/05/21
APPR: GB 2025/05/21

INITIAL REVISION:
DRWN: S . A I HARA 1996/11/27
APPR: M.FUKUSHIMA 2001/01/26

molex

0.5 MM PITCH B-TO-B CONN.
HEIGHT = 4 PLUG EMBOSS TAPE PACKAGE

PRODUCT CUSTOMER DRAWING

DOCUMENT NUMBER	DOC TYPE	DOC PART	REVISION
SD-53916-002	PSD	001	H1

THIRD ANGLE PROJECTION	DRAWING	SERIES
	A3-SIZE	53916

MATERIAL NUMBER	CUSTOMER	SHEET NUMBER
SEE TABLE	GENERAL	2 OF 3

DOCUMENT STATUS	P1	RELEASE DATE	2025/05/21 02:33:14

FORMAT: master-lb-prod-A3
REVISION: J1
DATE: 2021/05/01

引き出し方向
PULL OUT DIRECTION

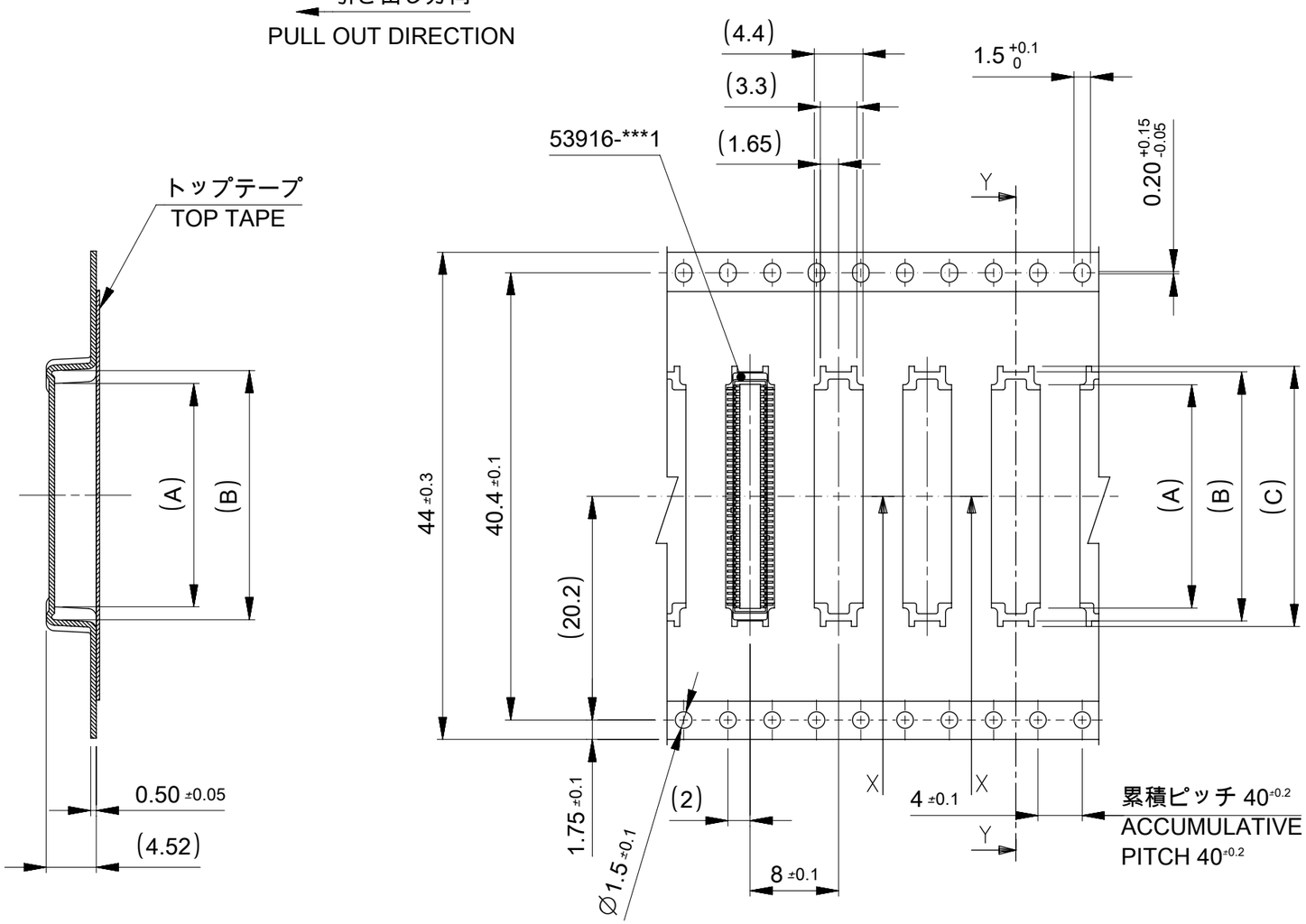

SECT:Y-Y

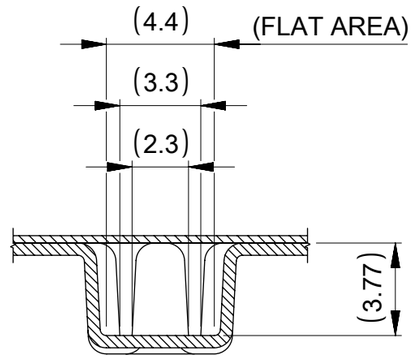

SECT:X-X

44mm 幅キャリアテープ
44mm WIDTH CARRIER TAPE

44	49.4	45.4	23.5	22.5	20.17	53916-0808	80
キャリアテープ幅 CARRIER TAPE WIDTH	E	D	(C)	(B)	(A)	MATERIAL NO.	極数 CIRCUIT

THIS DRAWING CONTAINS INFORMATION THAT IS PROPRIETARY TO MOLEX ELECTRONIC TECHNOLOGIES, LLC AND SHOULD NOT BE USED WITHOUT WRITTEN PERMISSION

GENERAL TOLERANCES (UNLESS SPECIFIED)	
10^{UNDER}	±0.2
$10^{OVER}30^{UNDER}$	±0.25
30^{OVER}	±0.3
ANGULAR	±3°

DRAFT WHERE APPLICABLE MUST REMAIN WITHIN DIMENSIONS

GENERAL TOLERANCES (UNLESS SPECIFIED)	
ANGULAR TOL	± 0 °
4 PLACES	± 0.2
3 PLACES	± 0.25
2 PLACES	± 0.3
1 PLACE	±
0 PLACES	±

DRAFT WHERE APPLICABLE MUST REMAIN WITHIN DIMENSIONS

DIMENSION UNITS: mm
SCALE: ---

CURRENT REV DESC: REMOVED OBSOLETED PART NUMBERS AS PER PCN#514995.

EC NO: 820689
DRWN: RAVINR1 2025/03/26
CHK'D: GB 2025/05/21
APPR: GB 2025/05/21

INITIAL REVISION:
DRWN: S . A I HARA 1996/11/27
APPR: M.FUKUSHIMA 2001/01/26

THIRD ANGLE PROJECTION | DRAWING: A3-SIZE | SERIES: 53916

molex

0.5 MM PITCH B-TO-B CONN.
HEIGHT = 4 PLUG EMBOSS TAPE PACKAGE

PRODUCT CUSTOMER DRAWING

DOCUMENT NUMBER	DOC TYPE	DOC PART	REVISION
SD-53916-002	PSD	001	H1

MATERIAL NUMBER	CUSTOMER	SHEET NUMBER
SEE TABLE	GENERAL	3 OF 3

DOCUMENT STATUS	P1	RELEASE DATE	2025/05/21 02:33:14

FORMAT: master-tb-prod-A3
REVISION: J1
DATE: 2021/05/01