354 Series

OMNI-BLOK® Molded Base Fuse Block for 3AB/3AG Fuses

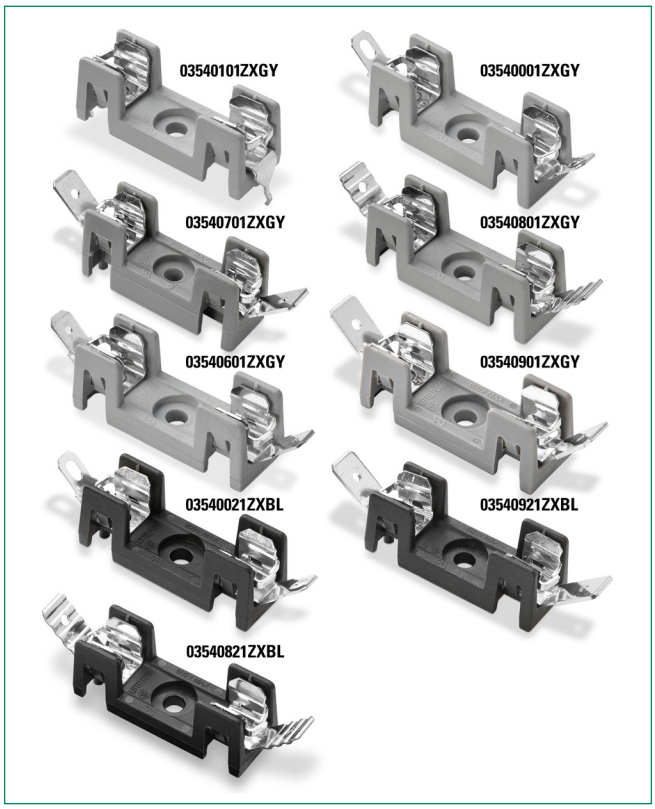

Product Characteristics

Compatible Fuses Size	**3AB/AG**
Description	A low profile fuse block featuring individual barriers which reinforce the fuse clips while providing greater protection against clip damage and electrical shock. The unique design permits self-alignment of clips to fuse cap. This, plus a one-piece clip/terminal assures low contact resistance. Higher current ratings have been attained using spring brass clips. With the exception of the two-pole unit, multiple pole units may be broken apart to obtain desired number of poles
Dielectric Strength	2200V., Minimum
Clip/Terminals	Tin plated phosphorus bronze except for 354900 series which is tin plated spring brass.
Base	Glass reinforced Thermoplastic. UL 94V0 flammability rating. The standard base color is Gray except for 345 x21 items (single pole products which include anti-rotation boss option) where the standard base color is Black. Refer to the Ordering Information table on the following page for more information.
Ambient Temperature	–40°Cto +85°C

Additional Information

Resources | Accessories | Samples

Agency Approval

Agency	Agency File Number
c UL us	E14721*
CSA	7316**

* - UL Recognized to UL/CSA 4248.1
** - CSA Certified to CSA C22.2 No 39-M1987

Electrical Information

Series or Catalog Number	Terminals	Rating
354 000	Solder	30A, 600 VDC/VAC*
354 600	3/16" Q.C.	20A, 600 VDC/VAC
354 700	1/4" Q.C. .032" Clip	30A, 600 VDC/VAC
354 800	1/4" Q.C.	20A, 600 VDC/VAC
354 900	1/4" Q.C.	30A, 600 VDC/VAC
354 101-GY	P.C. Board	15A, 600 VDC/VAC

*30 amp capability is based on temperature rise with #10 AWG wire properly soldered.

Clip Detail



Solder 3/16" | Q.C. 3/16" | Q.C. 1/4" | P.C. Board

Note: Two different style clips can be supplied for circuit identity or polarization. Contact Littelfuse.

© 2023 Littelfuse, Inc.
Specifications are subject to change without notice.
Revised: GD. 02/08/23

354 Series
OMNI-BLOK® Molded Base Fuse Block for 3AB/3AG Fuses

Product & Mounting Dimensions

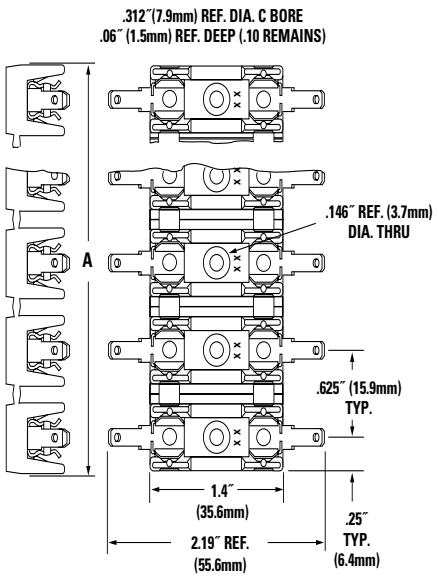

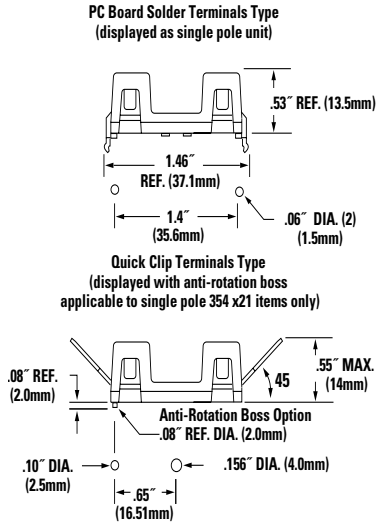

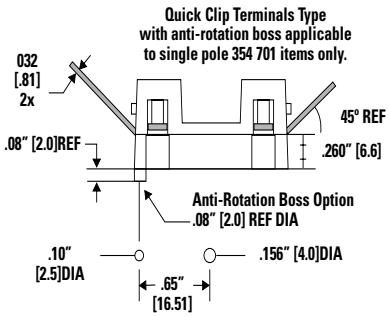

* Anti-Rotation Boss Option is not available on multiple poles.

Ordering Information

Solder Terminals	NEMA Style 3/16" Quick Clip Terminals	1/4" Quick Clip Terminals	NEMA Style 1/4" Quick Clip .032" Terminals	NEMA Style 1/4" Quick Clip Terminals	Number of Poles	Reference Dimension "A" [mm]
Ordering No.			Ordering No.			
03540101ZXGY	–	–	–	–	1	.50" [12.7]
03540021ZXBL*	03540621ZXBL*	03540821ZXBL*	–	03540921ZXBL*	1	.50" [12.7]
03540001ZXGY	03540601ZXGY	03540801ZXGY	03540701ZXGY*	03540901ZXGY	1	.50" [12.7]
03540002ZXGY	03540602ZXGY	03540802ZXGY	03540702ZXGY	03540902ZXGY	2	1.12" [28.5]
03540003ZXGY	03540603ZXGY	03540803ZXGY	03540703ZXGY	03540903ZXGY	3	1.75" [44.5]
03540004ZXGY	03540604ZXGY	03540804ZXGY	03540704ZXGY	03540904ZXGY	4	2.38" [60.5]
03540005ZXGY	03540605ZXGY	03540805ZXGY	03540705ZXGY	03540905ZXGY	5	3.00" [76.2]
03540006ZXGY	03540606ZXGY	03540806ZXGY	03540706ZXGY	03540906ZXGY	6	3.63" [92.2]
03540007ZXGY	03540607ZXGY	03540807ZXGY	03540707ZXGY	03540907ZXGY	7	4.25" [108.0]
03540008ZXGY	03540608ZXGY	03540808ZXGY	03540708ZXGY	03540908ZXGY	8	4.88" [124.0]
03540009ZXGY	03540609ZXGY	03540809ZXGY	03540709ZXGY	03540909ZXGY	9	5.50" [139.7]
03540010ZXGY	03540610ZXGY	03540810ZXGY	03540710ZXGY	03540910ZXGY	10	6.13" [155.7]
03540011ZXGY	03540611ZXGY	03540811ZXGY	03540711ZXGY	03540911ZXGY	11	6.75" [171.5]
03540012ZXGY	03540612ZXGY	03540812ZXGY	03540712ZXGY	03540912ZXGY	12	7.38" [187.5]

* With Anti-Rotation Boss

Disclaimer Notice - Information furnished is believed to be accurate and reliable. However, users should independently evaluate the suitability of and test each product selected for their own applications. Littelfuse products are not designed for, and may not be used in, all applications. Read complete Disclaimer Notice at: www.littelfuse.com/disclaimer-electronics.

© 2023 Littelfuse, Inc.
Specifications are subject to change without notice.
Revised: GD. 02/08/23