NL17SH02

Single 2-Input NOR Gate

The NL17SH02 MiniGate™ is an advanced high−speed CMOS 2−input NOR gate in ultra−small footprint.

The NL17SH02 input structures provide protection when voltages up to 7.0 V are applied, regardless of the supply voltage.

Features

- High Speed: t_{PD} = 3.0 ns (Typ) at V_{CC} = 5.0 V
- Low Power Dissipation: I_{CC} = 1 μA (Max) at T_A = 25°C
- Power Down Protection Provided on Inputs
- Overvoltage Tolerant (OVT) Input Pins
- Ultra−Small Package
- These are Pb−Free and Halide−Free Devices

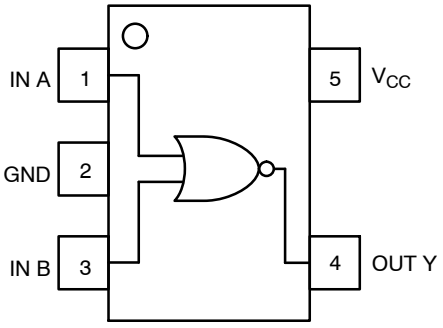

Figure 1. Pinout (Top View)

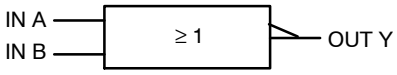

Figure 2. Logic Symbol

ON Semiconductor®

http://onsemi.com

MARKING DIAGRAM



SOT−953
CASE 527AE

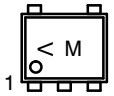

V = Specific Device Code (Rotated 90°)
M = Month Code

PIN ASSIGNMENT	
1	IN A
2	GND
3	IN B
4	OUT Y
5	V_{CC}

FUNCTION TABLE

Inputs		Output
A	**B**	**Y**
L	L	H
L	H	L
H	L	L
H	H	L

ORDERING INFORMATION

See detailed ordering and shipping information in the package dimensions section on page 4 of this data sheet.

© Semiconductor Components Industries, LLC, 2012

MAXIMUM RATINGS

Symbol	Parameter		Value	Unit
V_{CC}	DC Supply Voltage		−0.5 to +7.0	V
V_{IN}	DC Input Voltage		−0.5 to +7.0	V
V_{OUT}	DC Output Voltage	V_{IN} = 0 High or Low State	−0.5 to +7.0 −0.5 to V_{CC} +0.5	V
I_{IK}	DC Input Diode Current	V_{IN} < GND	−20	mA
I_{OK}	DC Output Diode Current	V_{OUT} < GND, V_{OUT} > V_{CC}	±20	mA
I_{OUT}	DC Output Source/Sink Current		±25	mA
I_{CC}	DC Supply Current per Supply Pin		50	mA
T_{STG}	Storage Temperature Range		−65 to +150	°C
T_L	Lead Temperature, 1 mm from Case for 10 Seconds		260	°C
T_J	Junction Temperature Under Bias		+150	°C
MSL	Moisture Sensitivity		Level 1	
F_R	Flammability Rating	Oxygen Index: 28 to 34	UL 94 V−0 @ 0.125 in	
V_{ESD}	ESD Withstand Voltage	Human Body Model (Note 2) Machine Model (Note 3) Charged Device Model (Note 4)	>2000 >150 N/A	V
$I_{LATCHUP}$	Latchup Performance	Above V_{CC} and Below GND at 125°C (Note 5)	±100	mA

Stresses exceeding Maximum Ratings may damage the device. Maximum Ratings are stress ratings only. Functional operation above the Recommended Operating Conditions is not implied. Extended exposure to stresses above the Recommended Operating Conditions may affect device reliability.

1. Measured with minimum pad spacing on an FR4 board, using 10 mm−by−1 inch, 2−ounce copper trace with no air flow.
2. Tested to EIA/JESD22−A114−A.
3. Tested to EIA/JESD22−A115−A.
4. Tested to JESD22−C101−A.
5. Tested to EIA/JESD78.

RECOMMENDED OPERATING CONDITIONS

Symbol	Characteristics		Min	Max	Unit
V_{CC}	Positive DC Supply Voltage		1.65	5.5	V
V_{IN}	Digital Input Voltage		0.0	5.5	V
V_{OUT}	Output Voltage		0.0	V_{CC}	V
T_A	Operating Temperature Range		−55	+125	°C
$\Delta t / \Delta V$	Input Transition Rise or Fail Rate	V_{CC} = 3.3 V ± 0.3 V V_{CC} = 5.0 V ± 0.5 V	0 0	100 20	ns/V

DC ELECTRICAL CHARACTERISTICS

Symbol	Parameter	Test Conditions	V_{CC} (V)	T_A = 25°C			$T_A \leq$ 85°C		−55°C to 125°C		Unit
				Min	Typ	Max	Min	Max	Min	Max	
V_{IH}	High−Level Input Voltage		1.65 to 2.0	0.75 x V_{CC}			0.75 x V_{CC}				V
			2.3 to 5.5	0.70 x V_{CC}			0.70 x V_{CC}				
V_{IL}	Low−Level Input Voltage		1.65 to 2.0			0.25 x V_{CC}		0.25 x V_{CC}		0.25 x V_{CC}	V
			2.3 to 5.5			0.30 x V_{CC}		0.30 x V_{CC}		0.30 x V_{CC}	
V_{OH}	High−Level Output Voltage	V_{IN} = V_{IH} or V_{IL} I_{OH} = −50 μA	2.0 3.0 4.5	1.9 2.9 4.4	2.0 3.0 4.5		1.9 2.9 4.4		1.9 2.9 4.4		V
		V_{IN} = V_{IH} or V_{IL} I_{OH} = −4 mA I_{OH} = −8 mA	3.0 4.5	2.58 3.94			2.48 3.80		2.34 3.66		
V_{OL}	Low−Level Output Voltage	V_{IN} = V_{IH} or V_{IL} I_{OL} = 50 μA	2.0 3.0 4.5		0.0 0.0 0.0	0.1 0.1 0.1		0.1 0.1 0.1		0.1 0.1 0.1	V
		V_{IN} = V_{IH} or V_{IL} I_{OL} = 4 mA I_{OL} = 8 mA	3.0 4.5			0.36 0.36		0.44 0.44		0.52 0.52	
I_{IN}	Input Leakage Current	V_{IN} = 5.5 V or GND	0 to 5.5			±0.1		±1.0		±1.0	μA
I_{CC}	Quiescent Supply Current	V_{IN} = V_{CC} or GND	5.5			1.0		10		40	μA

AC ELECTRICAL CHARACTERISTICS (Input t_r = t_f = 3.0 ns)

Symbol	Parameter	V_{CC} (V)	Test Conditions	T_A = 25°C			$T_A \leq$ 85°C		−55°C to 125°C		Unit
				Min	Typ	Max	Min	Max	Min	Max	
t_{PLH}, t_{PHL}	Propagation Delay, A or B to Y	3.0 to 3.6	C_L = 15 pF C_L = 50 pF		4.0 5.4	7.9 11.4		9.5 13.0		11.0 15.5	ns
		4.5 to 5.5	C_L = 15 pF C_L = 50 pF		3.0 3.8	5.5 7.5		6.5 8.5		8.0 10.0	
C_{IN}	Input Capacitance				5.5	10		10		10	pF
C_{PD}	Power Dissipation Capacitance (Note 6)	5.0			11						pF

6. C_{PD} is defined as the value of the internal equivalent capacitance which is calculated from the operating current consumption without load. Average operating current can be obtained by the equation: $I_{CC(OPR)} = C_{PD} \bullet V_{CC} \bullet f_{in} + I_{CC}$. C_{PD} is used to determine the no−load dynamic power consumption; $P_D = C_{PD} \bullet V_{CC}^2 \bullet f_{in} + I_{CC} \bullet V_{CC}$.

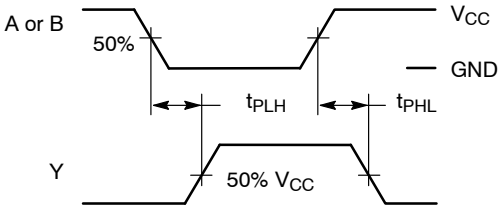

Figure 3. Switching Waveforms

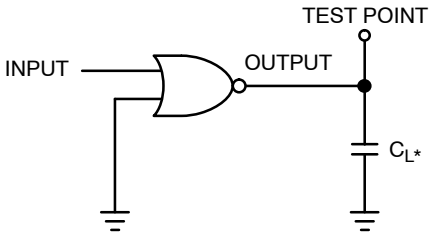

*Includes all probe and jig capacitance.

Figure 4. Test Circuit

ORDERING INFORMATION

Device	Package	Shipping†
NL17SH02P5T5G	SOT−953 (Pb−Free)	8000 / Tape & Reel

†For information on tape and reel specifications, including part orientation and tape sizes, please refer to our Tape and Reel Packaging Specifications Brochure, BRD8011/D.

MiniGate is a trademark of Semiconductor Components Industries, LLC (SCILLC).

MECHANICAL CASE OUTLINE
PACKAGE DIMENSIONS

ON Semiconductor®

SOT−953
CASE 527AE
ISSUE E

DATE 02 AUG 2011

SCALE 4:1

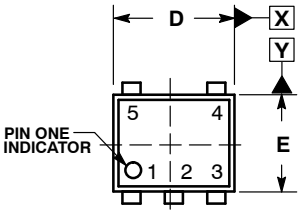

TOP VIEW

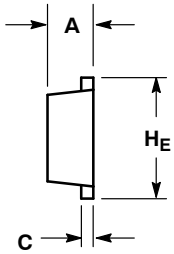

SIDE VIEW

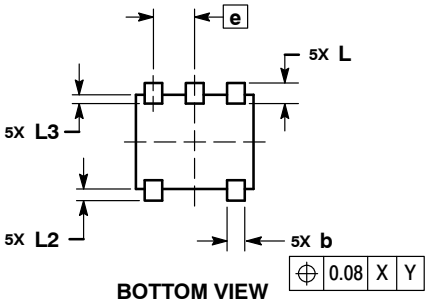

BOTTOM VIEW

NOTES:
1. DIMENSIONING AND TOLERANCING PER ASME Y14.5M, 1994.
2. CONTROLLING DIMENSION: MILLIMETERS
3. MAXIMUM LEAD THICKNESS INCLUDES LEAD FINISH. MINIMUM LEAD THICKNESS IS THE MINIMUM THICKNESS OF THE BASE MATERIAL.
4. DIMENSIONS D AND E DO NOT INCLUDE MOLD FLASH, PROTRUSIONS, OR GATE BURRS.

	MILLIMETERS		
DIM	MIN	NOM	MAX
A	0.34	0.37	0.40
b	0.10	0.15	0.20
C	0.07	0.12	0.17
D	0.95	1.00	1.05
E	0.75	0.80	0.85
e	0.35 BSC		
H_E	0.95	1.00	1.05
L	0.175 REF		
L2	0.05	0.10	0.15
L3	−−−	−−−	0.15

GENERIC MARKING DIAGRAM*

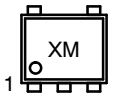

X = Specific Device Code
M = Month Code

*This information is generic. Please refer to device data sheet for actual part marking.
Pb−Free indicator, “G” or microdot “ ▪”, may or may not be present.

SOLDERING FOOTPRINT*

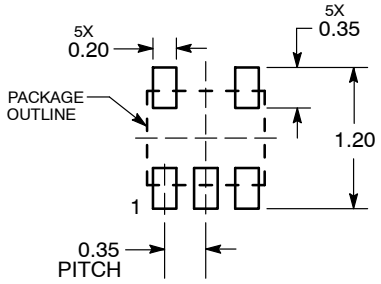

DIMENSIONS: MILLIMETERS

*For additional information on our Pb−Free strategy and soldering details, please download the ON Semiconductor Soldering and Mounting Techniques Reference Manual, SOLDERRM/D.

DOCUMENT NUMBER:	**98AON26457D**	Electronic versions are uncontrolled except when accessed directly from the Document Repository. Printed versions are uncontrolled except when stamped “CONTROLLED COPY” in red.
DESCRIPTION:	**SOT−953**	**PAGE 1 OF 1**

ON Semiconductor and ON are trademarks of Semiconductor Components Industries, LLC dba ON Semiconductor or its subsidiaries in the United States and/or other countries. ON Semiconductor reserves the right to make changes without further notice to any products herein. ON Semiconductor makes no warranty, representation or guarantee regarding the suitability of its products for any particular purpose, nor does ON Semiconductor assume any liability arising out of the application or use of any product or circuit, and specifically disclaims any and all liability, including without limitation special, consequential or incidental damages. ON Semiconductor does not convey any license under its patent rights nor the rights of others.

© Semiconductor Components Industries, LLC, 2019

onsemi, , and other names, marks, and brands are registered and/or common law trademarks of Semiconductor Components Industries, LLC dba "**onsemi**" or its affiliates and/or subsidiaries in the United States and/or other countries. **onsemi** owns the rights to a number of patents, trademarks, copyrights, trade secrets, and other intellectual property. A listing of **onsemi**'s product/patent coverage may be accessed at www.onsemi.com/site/pdf/Patent−Marking.pdf. **onsemi** reserves the right to make changes at any time to any products or information herein, without notice. The information herein is provided "as−is" and **onsemi** makes no warranty, representation or guarantee regarding the accuracy of the information, product features, availability, functionality, or suitability of its products for any particular purpose, nor does **onsemi** assume any liability arising out of the application or use of any product or circuit, and specifically disclaims any and all liability, including without limitation special, consequential or incidental damages. Buyer is responsible for its products and applications using **onsemi** products, including compliance with all laws, regulations and safety requirements or standards, regardless of any support or applications information provided by **onsemi**. "Typical" parameters which may be provided in **onsemi** data sheets and/or specifications can and do vary in different applications and actual performance may vary over time. All operating parameters, including "Typicals" must be validated for each customer application by customer's technical experts. **onsemi** does not convey any license under any of its intellectual property rights nor the rights of others. **onsemi** products are not designed, intended, or authorized for use as a critical component in life support systems or any FDA Class 3 medical devices or medical devices with a same or similar classification in a foreign jurisdiction or any devices intended for implantation in the human body. Should Buyer purchase or use **onsemi** products for any such unintended or unauthorized application, Buyer shall indemnify and hold **onsemi** and its officers, employees, subsidiaries, affiliates, and distributors harmless against all claims, costs, damages, and expenses, and reasonable attorney fees arising out of, directly or indirectly, any claim of personal injury or death associated with such unintended or unauthorized use, even if such claim alleges that **onsemi** was negligent regarding the design or manufacture of the part. **onsemi** is an Equal Opportunity/Affirmative Action Employer. This literature is subject to all applicable copyright laws and is not for resale in any manner.

ADDITIONAL INFORMATION

TECHNICAL PUBLICATIONS:
Technical Library: www.onsemi.com/design/resources/technical−documentation
onsemi Website: www.onsemi.com

ONLINE SUPPORT: www.onsemi.com/support
For additional information, please contact your local Sales Representative at www.onsemi.com/support/sales