LITEON®
OPTOELECTRONICS



SMD LED

Product Data Sheet

LTPL-C0610GDXN-HW

Spec No. :
Created Date: 2015/10/20
Revision: (PRELIMINARY) -4.0

LITE-ON Technology Corp. / Optoelectronics
No.90,Chien 1 Road, Chung Ho, New Taipei City 23585, Taiwan, R.O.C.
Tel: 886-2-2222-6181 Fax: 886-2-2221-1948 / 886-2-2221-0660
http://www.liteon.com/opto

SMD LED
LTPL-C0610GDXN-HW (PRELIMINARY)

1. Description

SMD LEDs from Lite-On are available in miniature sizes and special configurations for automated PC board assembly and space-sensitive applications. These SMD LEDs are suitable for use in a wide variety of electronic equipment, including cordless and cellular phones, notebook computers, network systems, home appliances, and indoor signboard applications..

.

1.1 Features

- Meet ROHS
- Package in 8mm tape on 7" diameter reels
- EIA STD package
- I.C. compatible
- Compatible with automatic placement equipment
- Compatible with infrared reflow solder process
- Preconditioning: accelerate to JEDEC level 3

1.2 Applications

- Indicator and backlight for audio and video equipment
- Indicator and backlight in office equipment
- Telecommunication
- Industrial equipment
- Indoor display

2. Package Dimensions

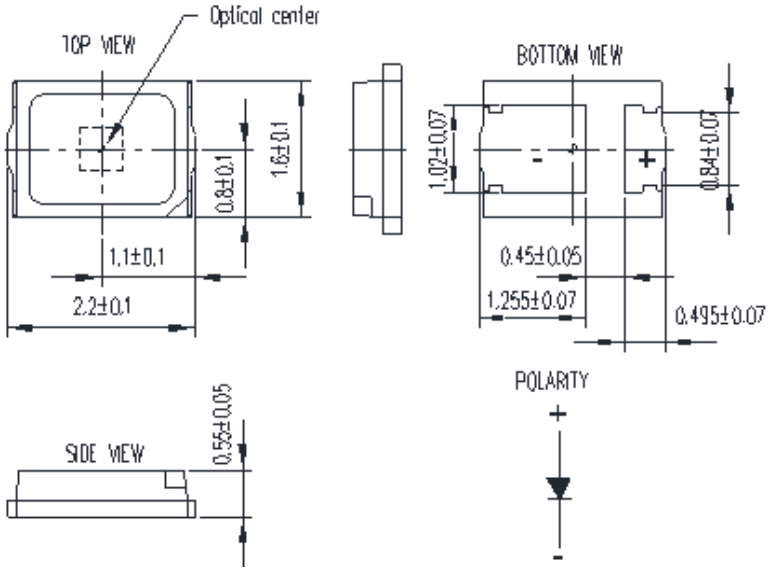

Part No.	Lens Color	Emitted Color
LTPL-C0610GDXN-HW	Water Clear	InGaN Green

Notes:

1. All dimensions are in millimeters and dimension tolerances are ±0.1mm.
2. Dimensions without tolerances are for reference only.

3. Rating and Characteristics

3.1 Absolute Maximum Ratings at Ta=25°C

Parameter	LTPL-C0610GDXN-HW	Unit
Power Dissipation	90	mW
Peak Forward Current (1/10 Duty Cycle, 0.1ms Pulse Width)	100	mA
DC Forward Current	30	mA
Junction Temperature	115	°C
Operating Temperature Range	-40°C to + 100°C	
Storage Temperature Range	-40°C to + 100°C	

Notes :

1. Stresses in excess of the absolute maximum ratings can cause damage to the emitter. Maximum Rating limits apply to each parameter in isolation, all parameters having values within the Current Derating Curves. It should not be assumed that limiting values of more than one parameters can be applied to the product at the same time. Exposures to the absolute maximum ratings for extended periods can adversely affect device reliability and continuously will cause possible permanent damage and de-rating parameters.

3.2 Suggest IR Reflow Condition For Pb Free Process:

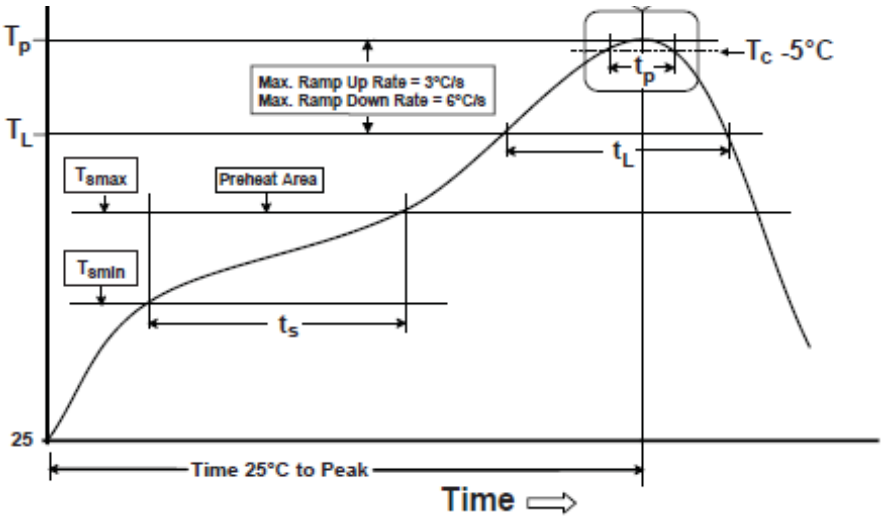

Profile Feature	Lead Free Assembly
Average Ramp-Up Rate (T_{Smax} to T_P)	3°C / second max
Preheat Temperature Min (T_{Smin})	150°C
Preheat Temperature Max (T_{Smax})	200°C
Preheat Time (t_{Smin} to t_{Smax})	60 – 120 seconds
Time Maintained Above Temperature (T_L)	217°C
Time Maintained Above Time (t_L)	60 – 150 seconds
Peak / Classification Temperature (T_P)	260°C
Time Within 5°C of Actual Peak Temperature (t_P)	5 seconds
Ramp – Down Rate	6°C / second max
Time 25°C to Peak Temperature	8 minutes max

Notes:

1. All temperatures refer to topside of the package, measured on the package body surface.
2. The soldering condition referring to J-STD-020D.
3. The soldering profile could be further referred to different soldering grease material characteristic. The grease vendor will provide this information.
4. A rapid-rate process is not recommended for the LEDs cooling down from the peak temperature.
5. Although the recommended reflow conditions are specified above, the reflow or hand soldering condition at the lowest possible temperature is desirable for the LEDs.
6. LiteOn cannot make a guarantee on the LEDs which have been already assembled using the dip soldering method.

3.3 Electrical / Optical Characteristics at Ta=25°C

Parameter	Symbol	LTPL-C0610GDXN-HW			Unit	Test Condition
		MIN	TYP	MAX.		
Luminous Intensity	ΦV	300	--	600	mcd	IF = 5mA Note 1
Viewing Angle	$2\theta_{1/2}$	-	120	-	deg	Note 2 (Fig.5)
Peak Emission Wavelength	λP	-	526	-	nm	Measurement @Peak (Fig.1)
Dominant Wavelength	λd	518	-	532	nm	IF = 5mA Note 3
Spectral Line Half-Width	Δλ	-	35	-	nm	
Forward Voltage	VF	2.5	-	3.0	V	IF = 5mA Note 4
Reverse Current	IR	-	-	10	μA	VR = 5V Note 5

Notes:

1. Luminous intensity is measured with a light sensor and filter combination that approximates the CIE eye-response curve
2. θ1/2 is the off-axis angle at which the luminous intensity is half the axial luminous intensity
3. The dominant wavelength, λd is derived from the CIE chromaticity diagram and represents the single wavelength which defines the color of the device
4. Forward Voltage Tolerance is +/- 0.1 volt.
5. Reverse voltage (VR) condition is applied to IR test only. The device is not designed for reverse operation.

4. Bin Rank

4.1 Bin code list

■ **IV Rank**

Parameter	Bin	Symbol	Min	Typ.	Max	Unit	Condition
Luminous Intensity	NN2	ΦV	300	--	400	mcd	IF = 5mA
	PP1		400	--	500		
	PP2		500	--	600		

Luminous flux measurement tolerance: ±15%

■ **Hue Rank**

Parameter	Bin	Symbol	Min	Typ.	Max	Unit	Condition
Dominant wavelength	L	λd	518	--	520	nm	IF = 5mA
	M		520	--	522		
	N		522	--	524		
	O		524	--	526		
	P		526	--	528		
	Q		528	--	530		
	R		530	--	532		

Tolerance for each Dominate Wavelength bin is +/- 1nm

■ Forward Voltage Binning

Parameter	Bin	Symbol	Min	Typ.	Max	Unit	Condition
Forward Voltage	I1	VF	2.5	--	2.6	V	IF = 5mA
	J1		2.6	--	2.7		
	K1		2.7	--	2.8		
	L1		2.8	--	2.9		
	M1		2.9	--	3.0		

Tolerance for each Dominate Wavelength bin is +/- 0.1V

5. Typical Electrical / Optical Characteristics Curves.

(25°C Ambient Temperature Unless Otherwise Noted)

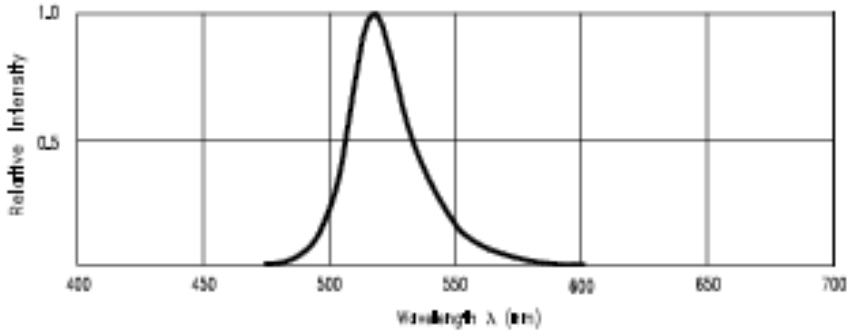

Fig.1 Relative Intensity vs. Wavelength

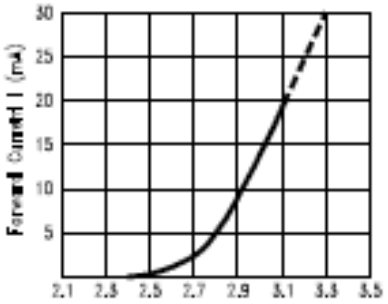

Fig.2 Forward Current vs. Forward Voltage

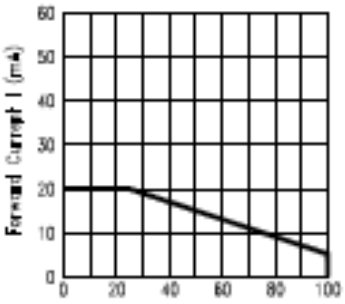

Fig.3 Forward Current Derating Curve

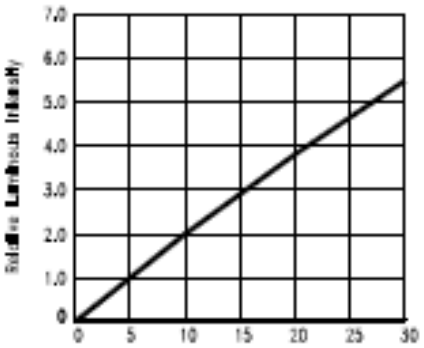

Fig.4 Relative Luminous Intensity vs. Forward Current

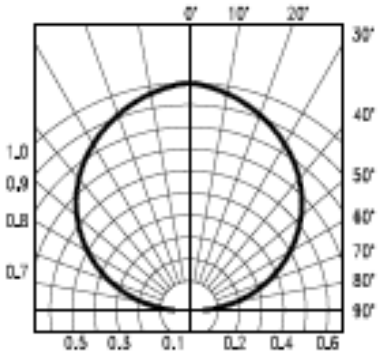

Fig.5 Spatial Distribution

6. User Guide

6.1 Cleaning

Do not use unspecified chemical liquid to clean LED they could harm the package.
If clean is necessary, immerse the LED in ethyl alcohol or in isopropyl alcohol at normal temperature for less one minute.

6.2 Recommend Printed Circuit Board Attachment Pad

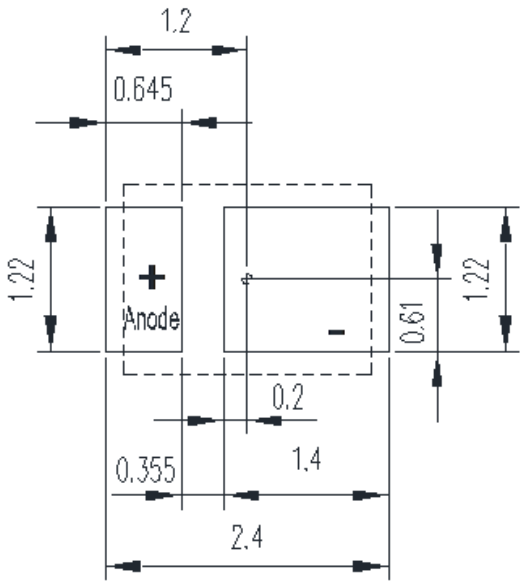

Notes:

1. Suggest stencil thickness is maximum 0.10mm.

6.3 Package Dimensions Of Tape And Reel

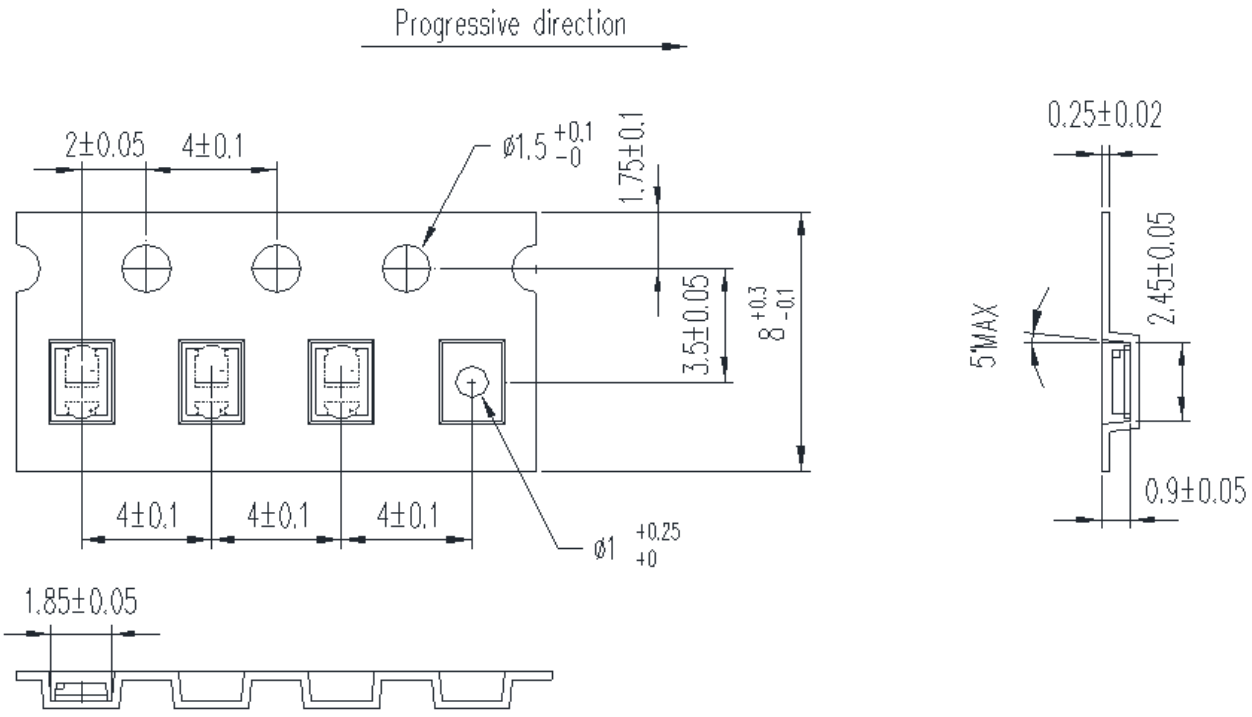

Note:

1. Drawings not to scale.
2. All dimensions are in millimeters.
3. All dimensions without tolerances are for reference only.

6.4 Package Dimensions of Reel

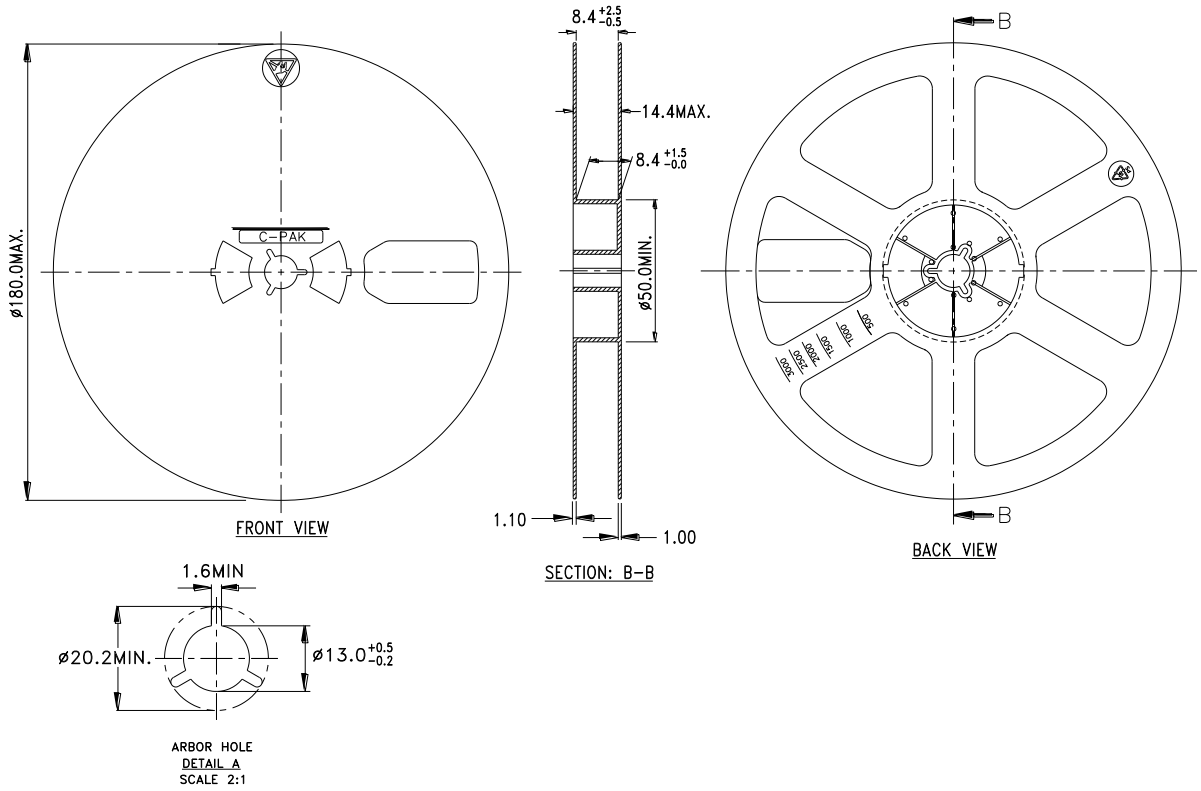

Notes:

1. Drawings not to scale.
2. All dimensions are in millimeters.
3. All dimensions without tolerances are for reference only.
4. Minimum package quantity is 500 pieces for remainders.
5. 7 inch reel-2000 pieces.
6. Empty component pockets sealed with top cover tape.
7. The maximum number of consecutive missing lamps is two
8. In accordance with EIA-481 specifications

7. Cautions

7.1 Application

The LEDs described here are intended to be used for ordinary electronic equipment (such as office equipment, communication equipment and household applications).Consult Liteon's Sales in advance for information on applications in which exceptional reliability is required, particularly when the failure or malfunction of the LEDs may directly jeopardize life or health (such as in aviation, transportation, traffic control equipment, medical and life support systems and safety devices).

7.2 Storage

The package is sealed:
The LEDs should be stored at 30°C or less and 70%RH or less. And the LEDs are limited to use within one year, while the LEDs is packed in moisture-proof package with the desiccants inside.
The package is opened:
The storage ambient for the LEDs should not exceed 30°C temperature and 60% relative humidity.
It is recommended that LEDs out of their original packaging are IR-reflowed within 168hrs.
For extended storage out of their original packaging, it is recommended that the LEDs be stored in a sealed container with appropriate desiccant, or in a desiccators with nitrogen ambient.
LEDs stored out of their original packaging for more than 168hrs should be baked at about 60 °C for at least 48 hours before solder assembly.

7.3 Cleaning

Use alcohol-based cleaning solvents such as isopropyl alcohol to clean the LED if necessary.

7.4 Soldering

Recommended soldering conditions:

Reflow soldering		Soldering iron	
Pre-heat	150~200°C	Temperature	300°C Max.
Pre-heat time	120 sec. Max.	Soldering time	3 sec. Max.
Peak temperature	260°C Max.		(one time only)
Soldering time	10 sec. Max.(Max. two times)		

Notes:

Because different board designs use different number and types of devices, solder pastes, reflow ovens, and circuit boards, no single temperature profile works for all possible combinations.
However, you can successfully mount your packages to the PCB by following the proper guidelines and PCB-specific characterization.
LITE-ON Runs both component-level verification using in-house **KYRAMX98** reflow chambers and board-level assembly. The results of this testing are verified through post-reflow reliability testing.Profiles used at LITE-ON are based on JEDEC standards to ensure that all packages can be successfully and reliably surface mounted.
Figure on page3 shows a sample temperature profile compliant to JEDEC standards. You can use this example as a generic target to set up your reflow process. You should adhere to the JEDEC profile limits as well as specifications and recommendations from the solder paste manufacturer to avoid damaging the device and create a reliable solder joint.

7.5 Drive Method

A LED is a current-operated device. In order to ensure intensity uniformity on multiple LEDs connected in parallel in an application, it is recommended that a current limiting resistor be incorporated in the drive circuit, in series with each LED as shown in Circuit A below.

Circuit model A

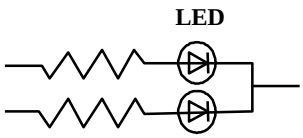

Circuit model B

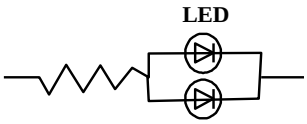

(A) Recommended circuit.
(B) The brightness of each LED might appear different due to the differences in the I-V characteristics of those LEDs.

7.6 ESD (Electrostatic Discharge)

Static Electricity or power surge will damage the LED.
Suggestions to prevent ESD damage:

- Use of a conductive wrist band or anti-electrostatic glove when handling these LEDs.
- All devices, equipment, and machinery must be properly grounded.
- Work tables, storage racks, etc. should be properly grounded.
- Use ion blower to neutralize the static charge which might have built up on surface of the LED's plastic lens as a result of friction between LEDs during storage and handling.

ESD-damaged LEDs will exhibit abnormal characteristics such as high reverse leakage current, low forward voltage, or " no lightup " at low currents.
To verify for ESD damage, check for " lightup " and Vf of the suspect LEDs at low currents.
The Vf of " good " LEDs should be >2.0V@0.1mA for InGaN product and >1.4V@0.1mA for AlInGaP product.

8. Others

The appearance and specifications of the product may be modified for improvement without prior notice.

9. Suggested Checking List

Training and Certification

1. Everyone working in a static-safe area is ESD-certified?
2. Training records kept and re-certification dates monitored?

Static-Safe Workstation & Work Areas

1. Static-safe workstation or work-areas have ESD signs?
2. All surfaces and objects at all static-safe workstation and within 1 ft measure less than 100V?
3. All ionizer activated, positioned towards the units?
4. Each work surface mats grounding is good?

Personnel Grounding

1. Every person (including visitors) handling ESD sensitive (ESDS) items wears wrist strap, heel strap or conductive shoes with conductive flooring?
2. If conductive footwear used, conductive flooring also present where operator stand or walk?
3. Garments, hairs or anything closer than 1 ft to ESD items measure less than 100V*?
4. Every wrist strap or heel strap/conductive shoes checked daily and result recorded for all DLs?
5. All wrist strap or heel strap checkers calibration up to date?

Note: *50V for InGaN LED.

Device Handling

1. Every ESDS items identified by EIA-471 labels on item or packaging?
2. All ESDS items completely inside properly closed static-shielding containers when not at static-safe workstation?
3. No static charge generators (e.g. plastics) inside shielding containers with ESDS items?
4. All flexible conductive and dissipative package materials inspected before reuse or recycles?

Others

1. Audit result reported to entity ESD control coordinator?
2. Corrective action from previous audits completed?
3. Are audit records complete and on file?