DATASHEET

4 PIN DIP HIGH VOLTAGE PHOTOTRANSISTOR PHOTOCOUPLER
EL851 Series

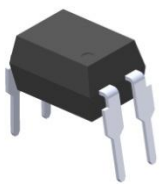
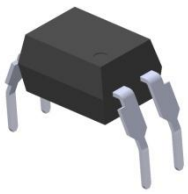
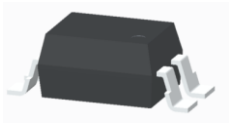

Schematic

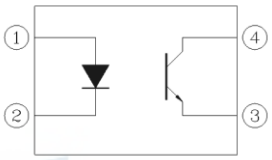

Pin Configuration
1. Anode
2. Cathode
3. Emitter
4. Collector

Features:

- Compliance Halogens Free (Only copper leadframe) (Br < 900 ppm, Cl < 900 ppm, Br+Cl < 1500 ppm)
- High collector- emitter voltage (V_{CEO} = 350V)
- Current transfer ratio (CTR: 50~600% at I_F = 5mA, V_{CE} = 5V)
- High isolation voltage between input and output (Viso = 5000 Vrms)
- Compact dual-in-line package
- The product itself will remain within RoHS compliant version
- Compliance with EU REACH
- UL and cUL approved (No. E214129)
- VDE approved (No. 132249)
- SEMKO approved
- NEMKO approved
- DEMKO approved
- FIMKO approved
- CQC approved

Description

The EL851 series devices consist an infrared emitting diodes, optically coupled to a phototransistor detector.
The devices are in a 4-pin DIP package and available in wide-lead spacing and SMD option.

Applications

- Telephone line interface
- Interface to power supply circuit
- Controller for SSRs. DC motor
- Programmable Controllers

Copyright © 2010, Everlight All Rights Reserved. Release Date : May 5, 2018. Issue No: DPC-0000082 Rev. 7

Ver.: 7 Release Date:05/08/2018 狀態:Approved(正式發行)

Absolute Maximum Ratings (Ta=25℃)

Parameter		Symbol	Rating	Unit
Input	Forward current	I_F	60	mA
	Peak forward current (1μs pulse)	I_{FM}	1	A
	Reverse voltage	V_R	6	V
	Power dissipation	P_D	100	mW
Output	Collector power dissipation	P_C	150	mW
	Collector-Emitter voltage	V_{CEO}	350	V
	Collector Current	I_C	50	mA
	Emitter-Collector voltage	V_{ECO}	7	V
Total Power Dissipation		P_{TOT}	200	mW
Isolation Voltage*1		V_{ISO}	5000	V rms
Operating Temperature		T_{OPR}	-55 to 100	°C
Storage Temperature		T_{STG}	-55 to 125	°C
Soldering Temperature*2		T_{SOL}	260	°C

Notes:
*1 AC for 1 minute, R.H.= 40 ~ 60% R.H. In this test, pins 1, 2 are shorted together, and pins 3, 4 are shorted together.
*2 For 10 seconds

Copyright © 2010, Everlight All Rights Reserved. Release Date : May 5, 2018. Issue No: DPC-0000082 Rev. 7
Ver.: 7 Release Date:05/08/2018 狀態:Approved(正式發行)

Electro-Optical Characteristics (Ta=25℃ unless specified otherwise)

Input

Parameter	Symbol	Min.	Typ.	Max.	Unit	Condition
Forward Voltage	V_F	-	1.2	1.4	V	I_F = 10mA
Reverse Current	I_R	-	-	10	μA	V_R = 5V
Input capacitance	C_{in}	-	30	250	pF	V = 0, f = 1kHz

Output

Parameter	Symbol	Min	Typ.	Max.	Unit	Condition
Collector-Emitter dark current	I_{CEO}	-	-	100	nA	V_{CE} = 200V
Collector-Emitter breakdown voltage	BV_{CEO}	350	-	-	V	I_C = 0.1mA
Emitter-Collector breakdown voltage	BV_{ECO}	7	-	-	V	I_E = 0.1mA
Collector-Emitter capacitance	C_{CE}	-	10	-	pF	VCE = 0V, f = 1MHz

Transfer Characteristics

Parameter	Symbol	Min	Typ.	Max.	Unit	Condition
Current Transfer Ratio	CTR	50	-	600	%	I_F = 5mA ,V_{CE} = 5V
Collector-emitter saturation voltage	$V_{CE(sat)}$	-	-	0.4	V	I_F = 20mA , I_C = 1mA
Isolation resistance	R_{IO}	10^{11}	-	-	Ω	V_{IO} = 500Vdc
Input-output capacitance	C_{IO}	-	0.6	-	pF	V_{IO} = 0, f = 1MHz
Rise time	t_r	-	4	18	μs	V_{CE} = 2V, I_C = 2mA, R_L = 100Ω
Fall time	t_f	-	5	18	μs	

* Typical values at T_a = 25°C

Copyright © 2010, Everlight All Rights Reserved. Release Date : May 5, 2018. Issue No: DPC-0000082 Rev. 7

Ver.: 7 Release Date:05/08/2018 狀態:Approved(正式發行)

Typical Electro-Optical Characteristics Curves

Figure 1. Forward Current vs Forward Voltage

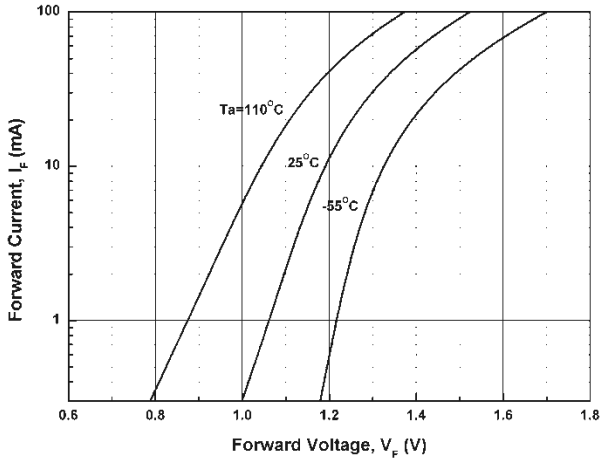

Figure 2. Current Transfer Ratio vs Forward Current

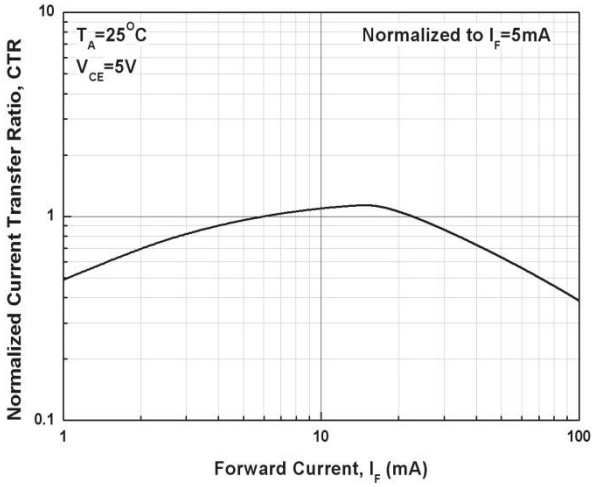

Figure 3. Collector Current vs Collector-emitter Voltage

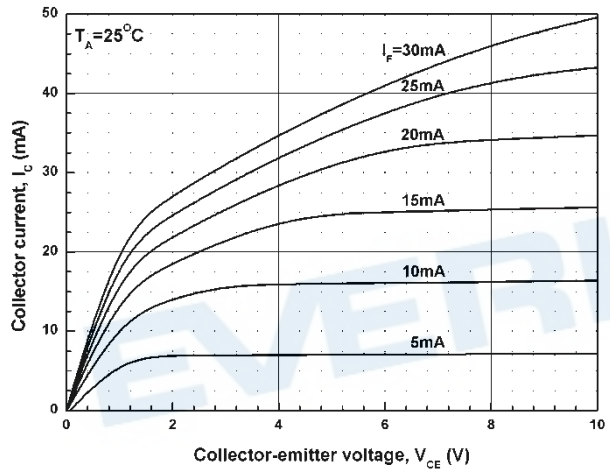

Figure 4. Relative Current Transfer Ratio vs Ambient Temperature

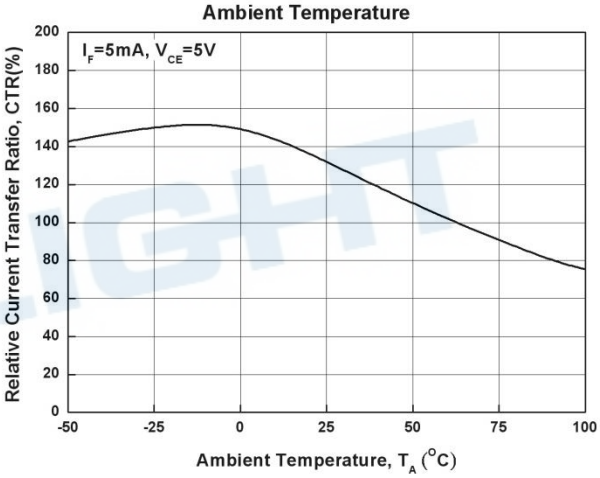

Figure 5. Collector-emitter Saturation Voltage vs Ambient Temperature

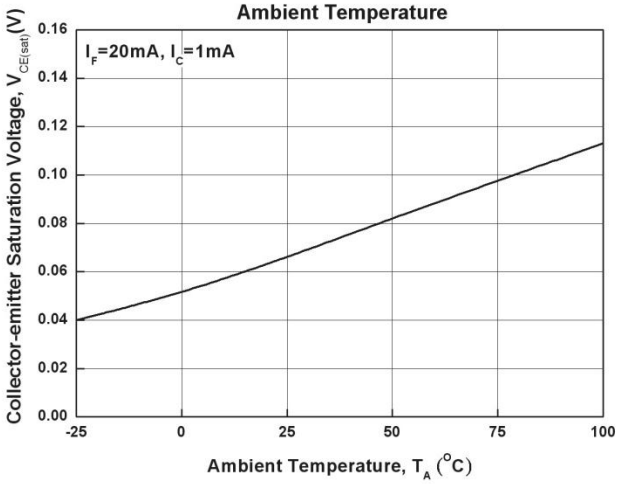

Figure 6. Dark Current vs Ambient Temperature

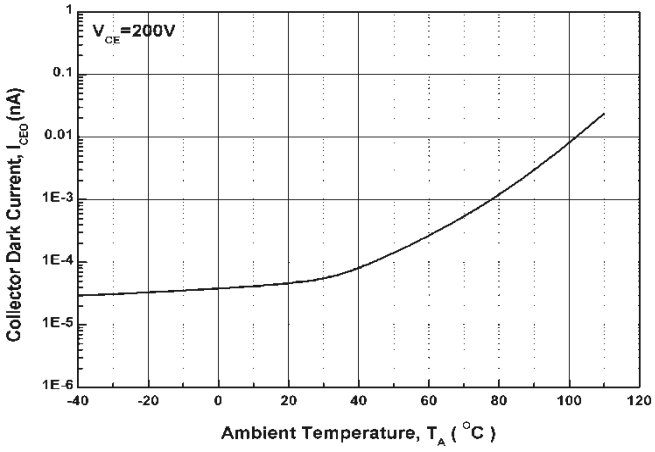

Copyright © 2010, Everlight All Rights Reserved. Release Date : May 5, 2018. Issue No: DPC-0000082 Rev. 7
Ver.: 7 Release Date:05/08/2018 狀態:Approved(正式發行)

Figure .7 Switching Time vs. Load Resistance

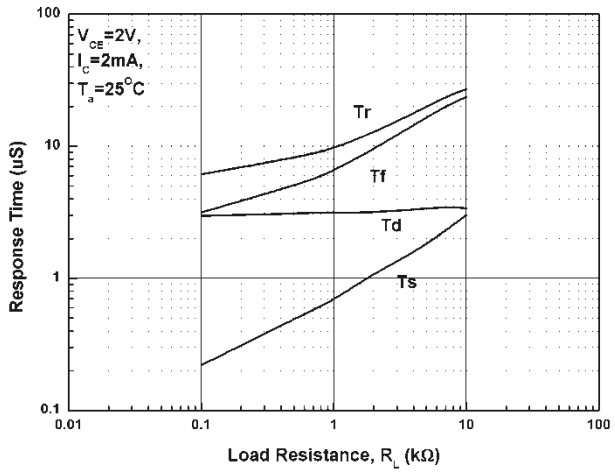

Figure 8. Collector-emitter Saturation Voltage vs Forward Current

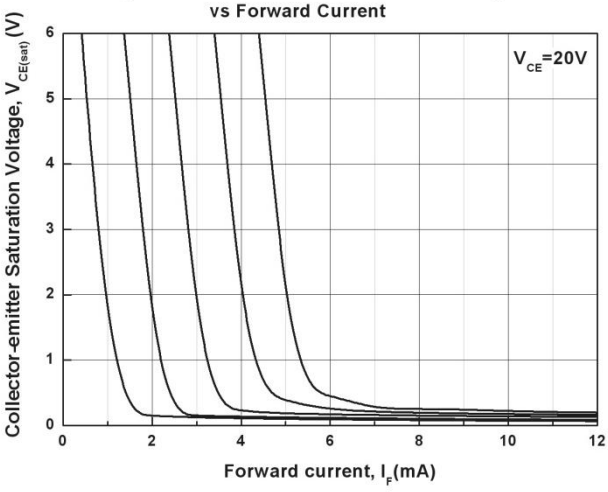

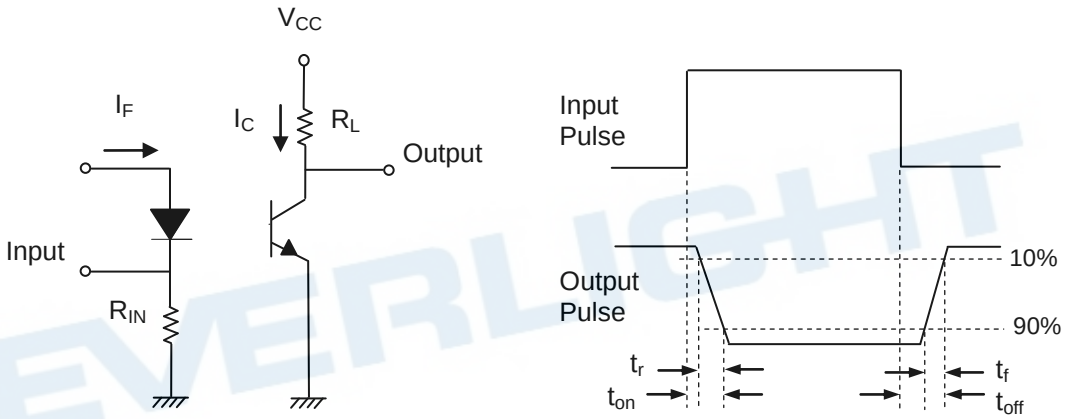

Figure 9. Switching Time Test Circuit & Waveforms

Copyright © 2010, Everlight All Rights Reserved. Release Date : May 5, 2018. Issue No: DPC-0000082 Rev. 7
Ver.: 7 Release Date:05/08/2018 狀態:Approved(正式發行)

Order Information

Part Number

EL851X(Z)-V

Note

X = Lead form option (S1, M or none)
Z = Tape and reel option (TA, TB, TU, TD or none)
V = VDE safety (optional)

Option	Description	Packing quantity
None	Standard DIP-4	100 units per tube
M	Wide lead bend (0.4 inch spacing)	100 units per tube
S1 (TA)	Surface mount lead form (low profile) + TA tape & reel option	1000 units per reel
S1 (TB)	Surface mount lead form (low profile) + TB tape & reel option	1000 units per reel
S1 (TU)	Surface mount lead form (low profile) + TU tape & reel option	1500 units per reel
S1 (TD)	Surface mount lead form (low profile) + TD tape & reel option	1500 units per reel

Copyright © 2010, Everlight All Rights Reserved. Release Date : May 5, 2018. Issue No: DPC-0000082 Rev. 7

Ver.: 7 Release Date:05/08/2018 狀態:Approved(正式發行)

Package Dimension (Dimensions in mm)

Standard DIP Type

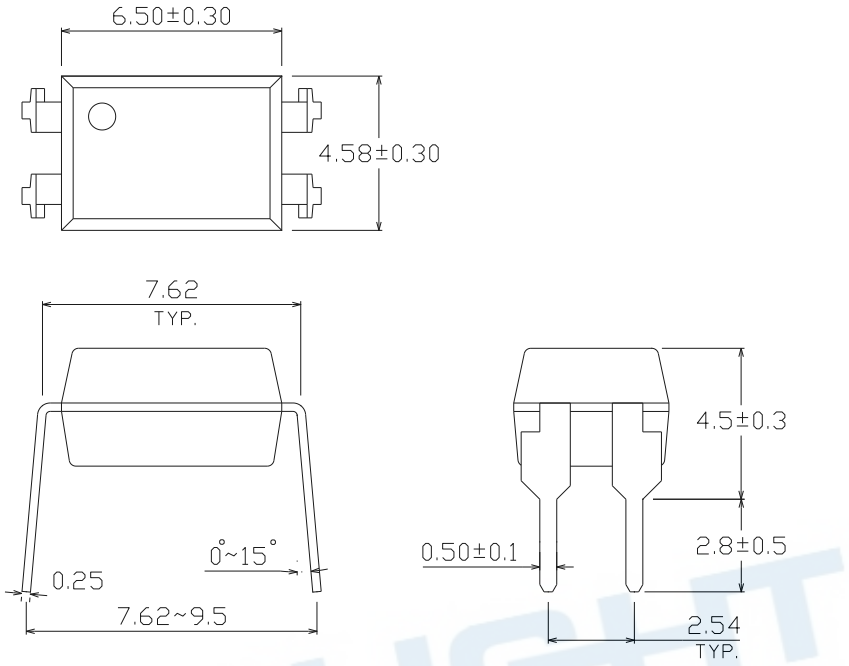

Option M Type

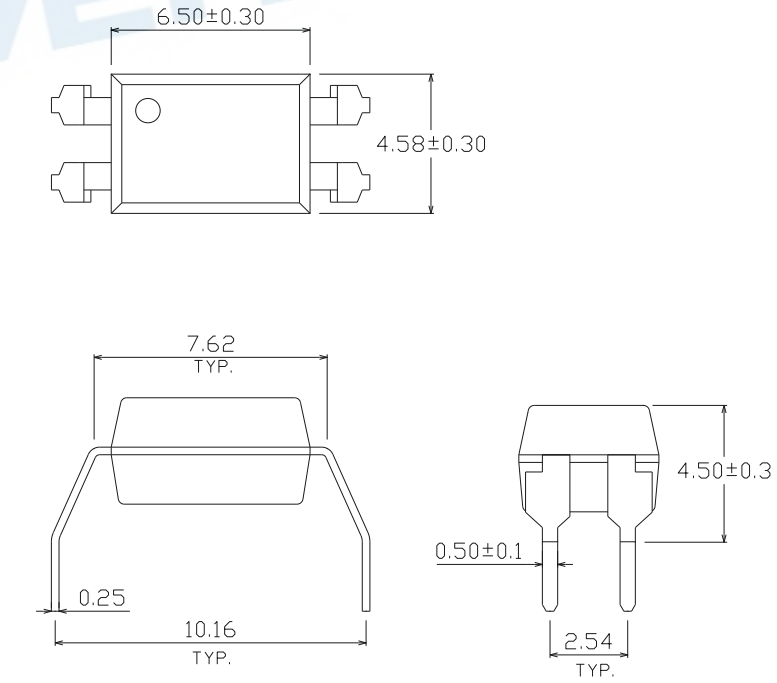

Copyright © 2010, Everlight All Rights Reserved. Release Date : May 5, 2018. Issue No: DPC-0000082 Rev. 7
Ver.: 7 Release Date:05/08/2018 狀態:Approved(正式發行)

Option S1 Type

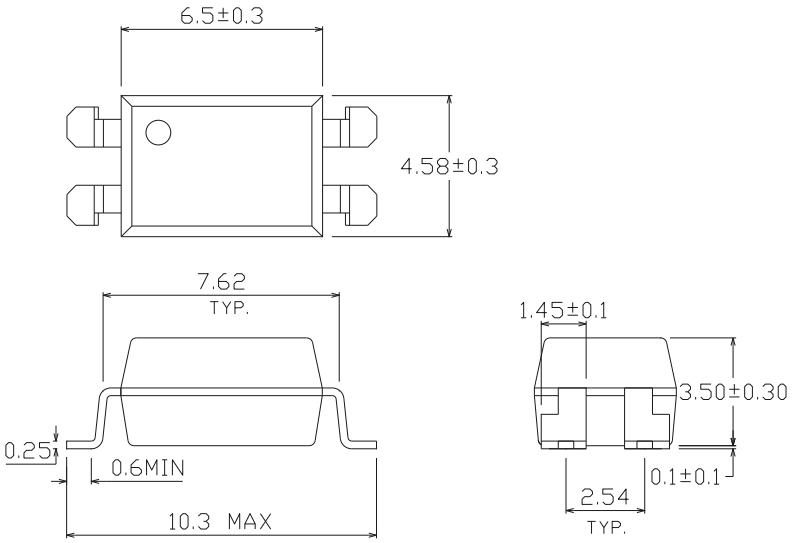

Recommended pad layout for surface mount leadform

For S1 option

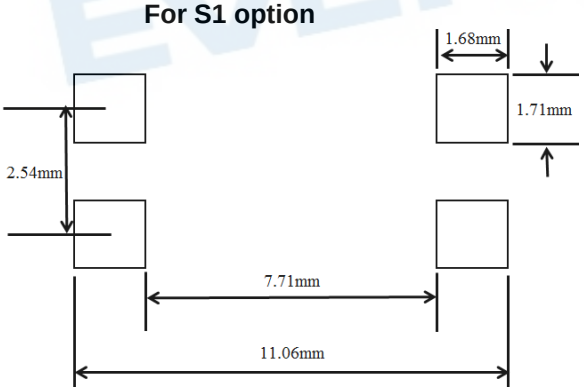

Notes

Suggested pad dimension is just for reference only.
Please modify the pad dimension based on individual need.

Copyright © 2010, Everlight All Rights Reserved. Release Date : May 5, 2018. Issue No: DPC-0000082 Rev. 7

Ver.: 7 Release Date:05/08/2018 狀態:Approved(正式發行)

Device Marking



Notes

EL	denotes EVERLIGHT
851	denotes Device Number
Y	denotes 1 digit Year code
WW	denotes 2 digit Week code
V	denotes VDE (optional)

EVERLIGHT

Copyright © 2010, Everlight All Rights Reserved. Release Date : May 5, 2018. Issue No: DPC-0000082 Rev. 7

Ver.:7 Release Date:05/08/2018 狀態:Approved(正式發行)

Tape & Reel Packing Specifications

Option TA

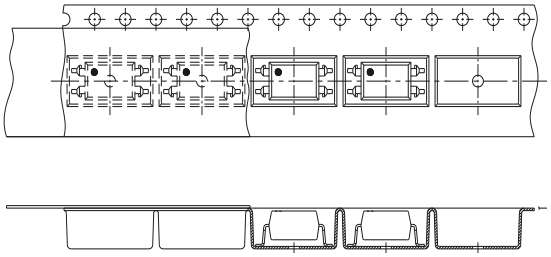

Direction of feed from reel

Option TB

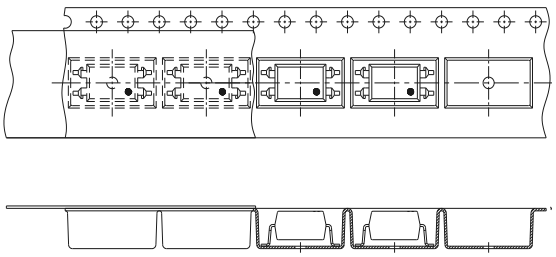

Direction of feed from reel

Tape dimensions

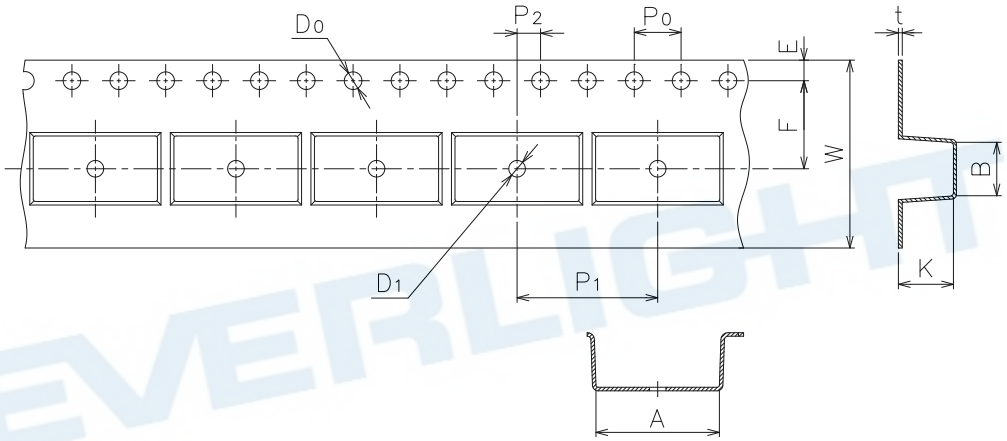

Dimension No.	A	B	Do	D1	E	F
Dimension (mm) S1	10.7±0.1	4.65±0.1	1.5±0.1	1.50±0.1	1.75±0.1	7.5±0.1
Dimension No.	**Po**	**P1**	**P2**	**t**	**W**	**K**
Dimension (mm) S1	4.0±0.1	12.0±0.1	2.0±0.1	0.4±0.1	16.0±0.3	3.90±0.1

Copyright © 2010, Everlight All Rights Reserved. Release Date : May 5, 2018. Issue No: DPC-0000082 Rev. 7

Ver.:7 Release Date:05/08/2018 狀態:Approved(正式發行)

Tape & Reel Packing Specifications

Option TD

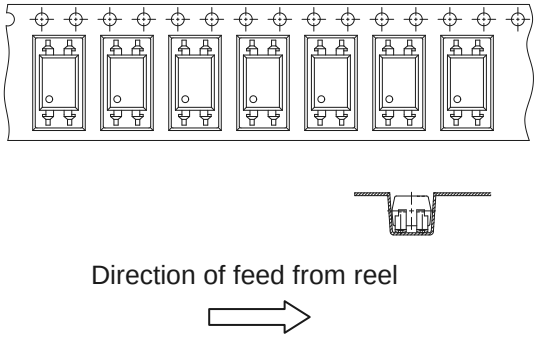

Direction of feed from reel

Option TU

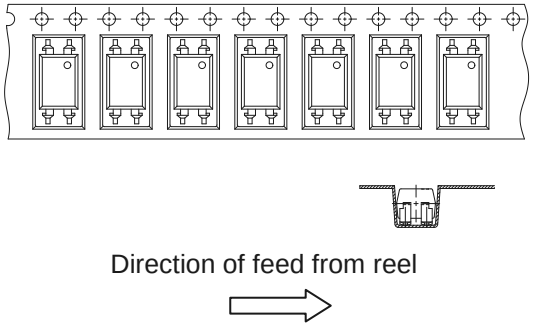

Direction of feed from reel

Tape dimensions

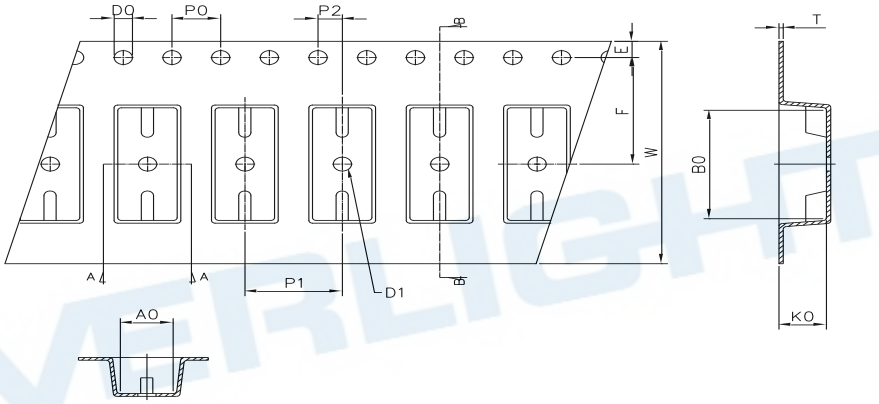

Dimension No.	**Ao**	**Bo**	**Do**	**D1**	**E**	**F**
Dimension (mm)	4.90±0.1	10.40±0.1	1.5±0.1	1.50±0.1	1.75±0.1	7.50±0.1
Dimension No.	**Po**	**P1**	**P2**	**t**	**W**	**Ko**
Dimension(mm)	4.00±0.1	8.00±0.1	2.00±0.1	0.40±0.1	16.00±0.3	4.60±0.1

Copyright © 2010, Everlight All Rights Reserved. Release Date : May 5, 2018. Issue No: DPC-0000082 Rev. 7
Ver.:7 Release Date:05/08/2018 狀態:Approved(正式發行)

Precautions for Use

1. Soldering Condition

1.1 (A) Maximum Body Case Temperature Profile for evaluation of Reflow Profile

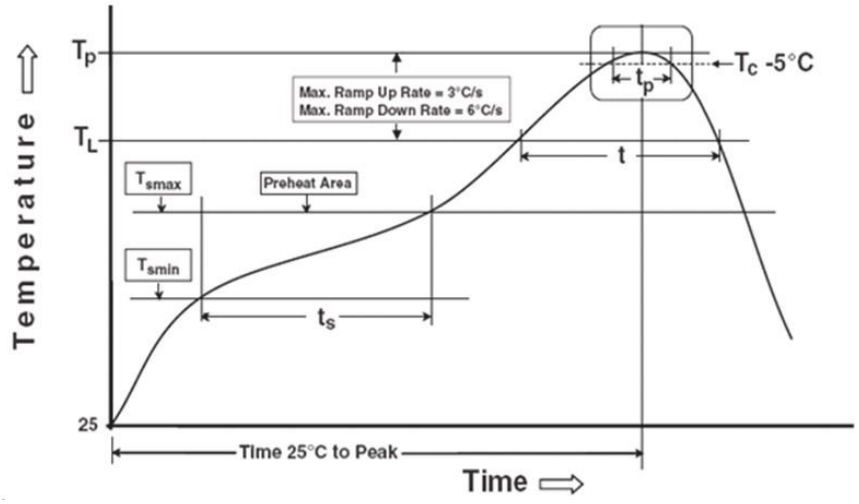

Note: Reference: IPC/JEDEC J-STD-020D

Preheat	
Temperature min (T_{smin})	150 °C
Temperature max (T_{smax})	200°C
Time (T_{smin} to T_{smax}) (t_s)	60-120 seconds
Average ramp-up rate (T_{smax} to T_p)	3 °C/second max
Other	
Liquidus Temperature (T_L)	217 °C
Time above Liquidus Temperature (t_L)	60-100 sec
Peak Temperature (T_P)	260°C
Time within 5 °C of Actual Peak Temperature: T_P - 5°C	30 s
Ramp- Down Rate from Peak Temperature	6°C /second max.
Time 25°C to peak temperature	8 minutes max.
Reflow times	3 times

.

Copyright © 2010, Everlight All Rights Reserved. Release Date : May 5, 2018. Issue No: DPC-0000082 Rev. 7
Ver.: 7 Release Date:05/08/2018 狀態:Approved(正式發行)

DISCLAIMER

1. Above specification may be changed without notice. EVERLIGHT will reserve authority on material change for above specification.
2. The graphs shown in this datasheet are representing typical data only and do not show guaranteed values.
3. When using this product, please observe the absolute maximum ratings and the instructions for use outlined in these specification sheets. EVERLIGHT assumes no responsibility for any damage resulting from use of the product which does not comply with the absolute maximum ratings and the instructions included in these specification sheets.
4. These specification sheets include materials protected under copyright of EVERLIGHT. Reproduction in any form is prohibited without the specific consent of EVERLIGHT.
5. This product is not intended to be used for military, aircraft, automotive, medical, life sustaining or life saving applications or any other application which can result in human injury or death. Please contact authorized Everlight sales agent for special application request.
6. Statements regarding the suitability of products for certain types of applications are based on Everlight's knowledge of typical requirements that are often placed on Everlight products in generic applications. Such statements are not binding statements about the suitability of products for a particular application. It is the customer's responsibility to validate that a particular product with the properties described in the product specification is suitable for use in a particular application. Parameters provided in datasheets and/or specifications may vary in different applications and performance may vary over time. All operating parameters, including typical parameters, must be validated for each customer application by the customer's technical experts. Product specifications do not expand or otherwise modify Everlight's terms and conditions of purchase, including but not limited to the warranty expressed therein.

Copyright © 2010, Everlight All Rights Reserved. Release Date : May 5, 2018. Issue No: DPC-0000082 Rev. 7

Ver.: 7 Release Date:05/08/2018 狀態:Approved(正式發行)