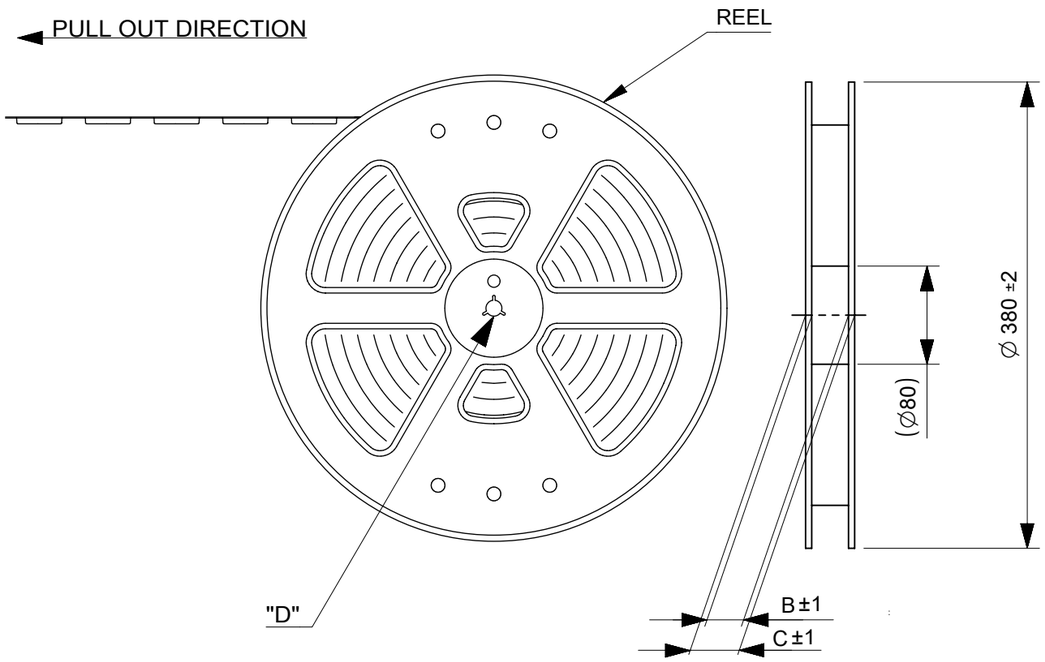

NOTES

1. FOR DIMENSION OF PRODUCT, REFER TO PRODUCT DRAWING.
2. NUMBER OF CONNECTORS : 7000PCS/REEL
3. LEAD TAPE LENGTH

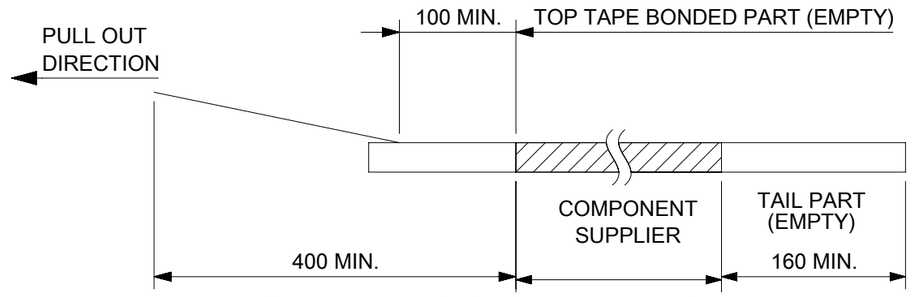

4. TOP TAPE PEEL FORCE IS DEFINED BY IEC60286-3.
5. MATERIAL
   CARRIER TAPE : POLYSTYRENE
   TOP TAPE : PET , OTHER
   REEL : POLYSTYRENE (PS) < RECYCLE MATERIAL CONTAINED >

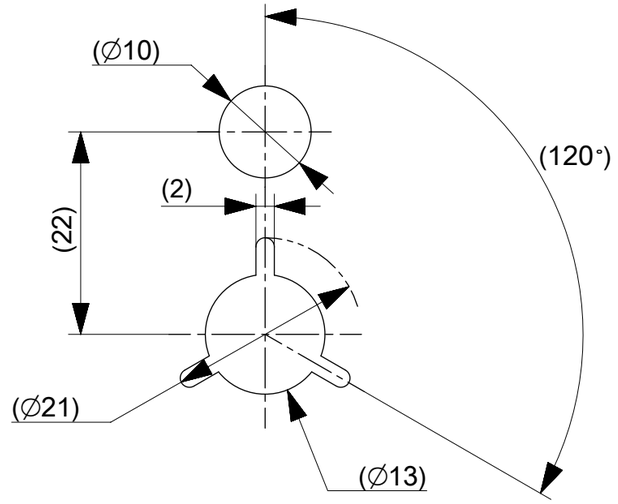

DETAIL "D"

CONNECTOR SERIES NO. 505270**09

THIS DRAWING CONTAINS INFORMATION THAT IS PROPRIETARY TO MOLEX ELECTRONIC TECHNOLOGIES, LLC AND SHOULD NOT BE USED WITHOUT WRITTEN PERMISSION

DIMENSION UNITS	SCALE
mm	NTS

GENERAL TOLERANCES (UNLESS SPECIFIED)		
ANGULAR TOL	±	3.0 °
4 PLACES	±	0.03
3 PLACES	±	0.03
2 PLACES	±	0.05
1 PLACE	±	0.1
0 PLACES	±	0.2

DRAFT WHERE APPLICABLE MUST REMAIN WITHIN DIMENSIONS

CURRENT REV DESC: REMOVED OBSOLETED PART NUMBER AS PER PCN#509450.

EC NO: 694111
DRWN: SANTHN 2022/02/02
CHK'D: GGA 2022/03/31
APPR: GGA 2022/03/31

INITIAL REVISION:
DRWN: FSATO 2017/10/18
APPR: MSASAO 2017/11/02

THIRD ANGLE PROJECTION | DRAWING: A3-SIZE | SERIES: 505270

molex

0.35 BB H=0.8 SSB8RP REC EMBSTP PKG

PRODUCT CUSTOMER DRAWING

DOCUMENT NUMBER	DOC TYPE	DOC PART	REVISION
5052700001-SD	PSD	000	A1

MATERIAL NUMBER	CUSTOMER	SHEET NUMBER
SEE CHART	GENERAL	1 OF 3

DOCUMENT STATUS	P1	RELEASE DATE	2022/03/31 10:33:22

FORMAT: master-tb-prod-A3
REVISION: J1
DATE: 2021/05/01

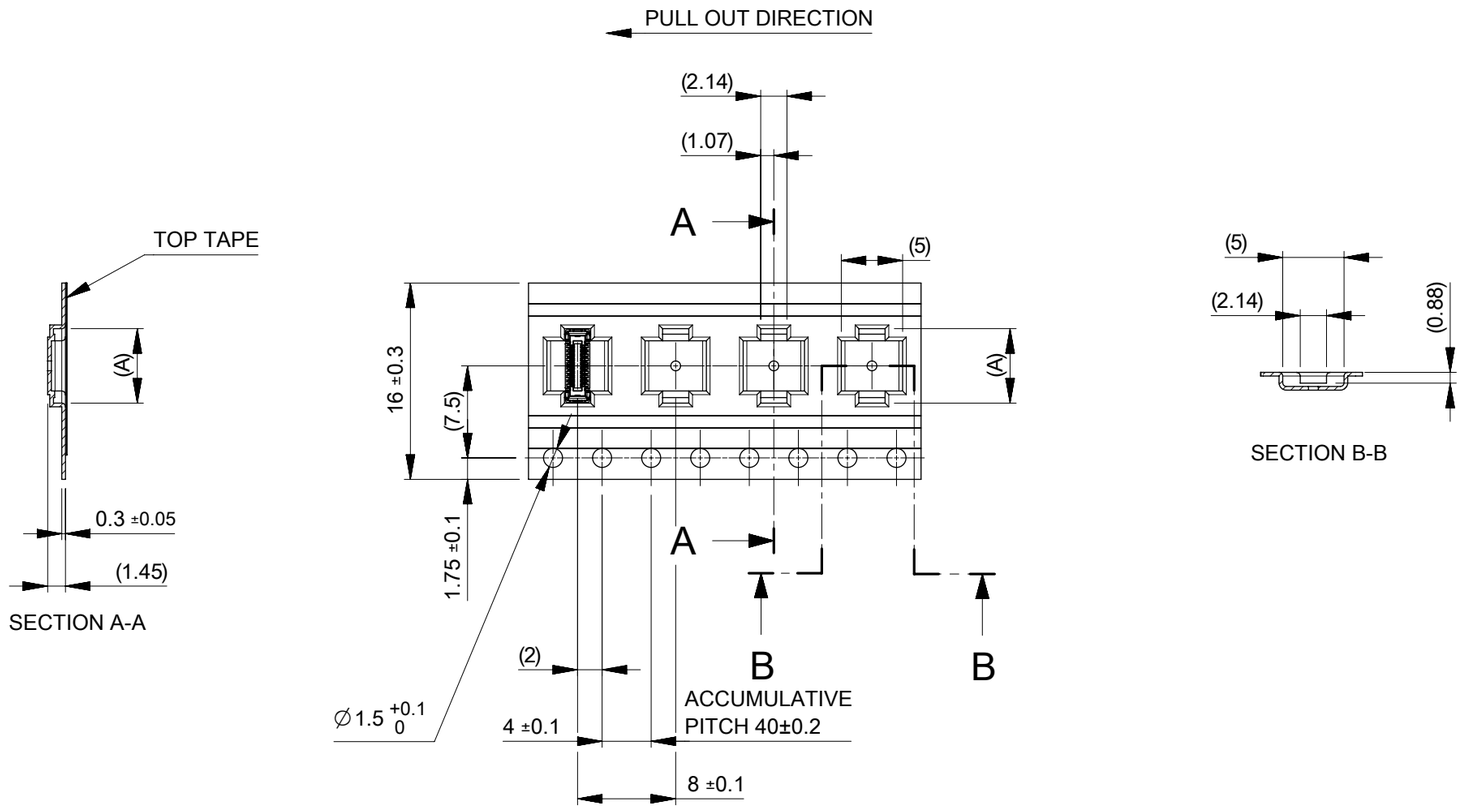

16	21.4	17.4	7.82	5052703012	○	---	30
			6.77	5052702412	○	---	24
			6.07	5052702012	○	---	20
			5.37	5052701612	○	---	16
			4.32	5052701012	○	---	10
			3.62	5052700612	○	---	6
キャリアテープ幅 CARRIER TAPE WIDTH	C	B	(A)	EMBOSSED TAPE PACKAGE	HIGH VOL. TOOL	LOW VOL. TOOL	CIRCUIT
				ORDER NO.	SAMPLE PREPARATION ○:TOOLED △:WOOK IN PROCESS ---:TOOLING TO BE CONFIRMED		

THIS DRAWING CONTAINS INFORMATION THAT IS PROPRIETARY TO MOLEX ELECTRONIC TECHNOLOGIES, LLC AND SHOULD NOT BE USED WITHOUT WRITTEN PERMISSION

DIMENSION UNITS	SCALE
mm	NTS

GENERAL TOLERANCES (UNLESS SPECIFIED)	
ANGULAR TOL	± 3.0 °
4 PLACES	± 0.03
3 PLACES	± 0.03
2 PLACES	± 0.05
1 PLACE	± 0.1
0 PLACES	± 0.2

DRAFT WHERE APPLICABLE MUST REMAIN WITHIN DIMENSIONS

CURRENT REV DESC: REMOVED OBSOLETED PART NUMBER AS PER PCN#509450.

EC NO: 694111
DRWN: SANTHN 2022/02/02
CHK'D: GGA 2022/03/31
APPR: GGA 2022/03/31

INITIAL REVISION:
DRWN: FSATO 2017/10/18
APPR: MSASAO 2017/11/02

molex

0.35 BB H=0.8 SSB8RP REC EMBSTP PKG

PRODUCT CUSTOMER DRAWING

DOCUMENT NUMBER	DOC TYPE	DOC PART	REVISION
5052700001-SD	PSD	000	A1

THIRD ANGLE PROJECTION	DRAWING	SERIES	MATERIAL NUMBER	CUSTOMER	SHEET NUMBER
	A3-SIZE	505270	SEE CHART	GENERAL	2 OF 3

DOCUMENT STATUS	P1	RELEASE DATE	2022/03/31 10:33:22

FORMAT: master-ib-prod-A3
REVISION: J1
DATE: 2021/05/01

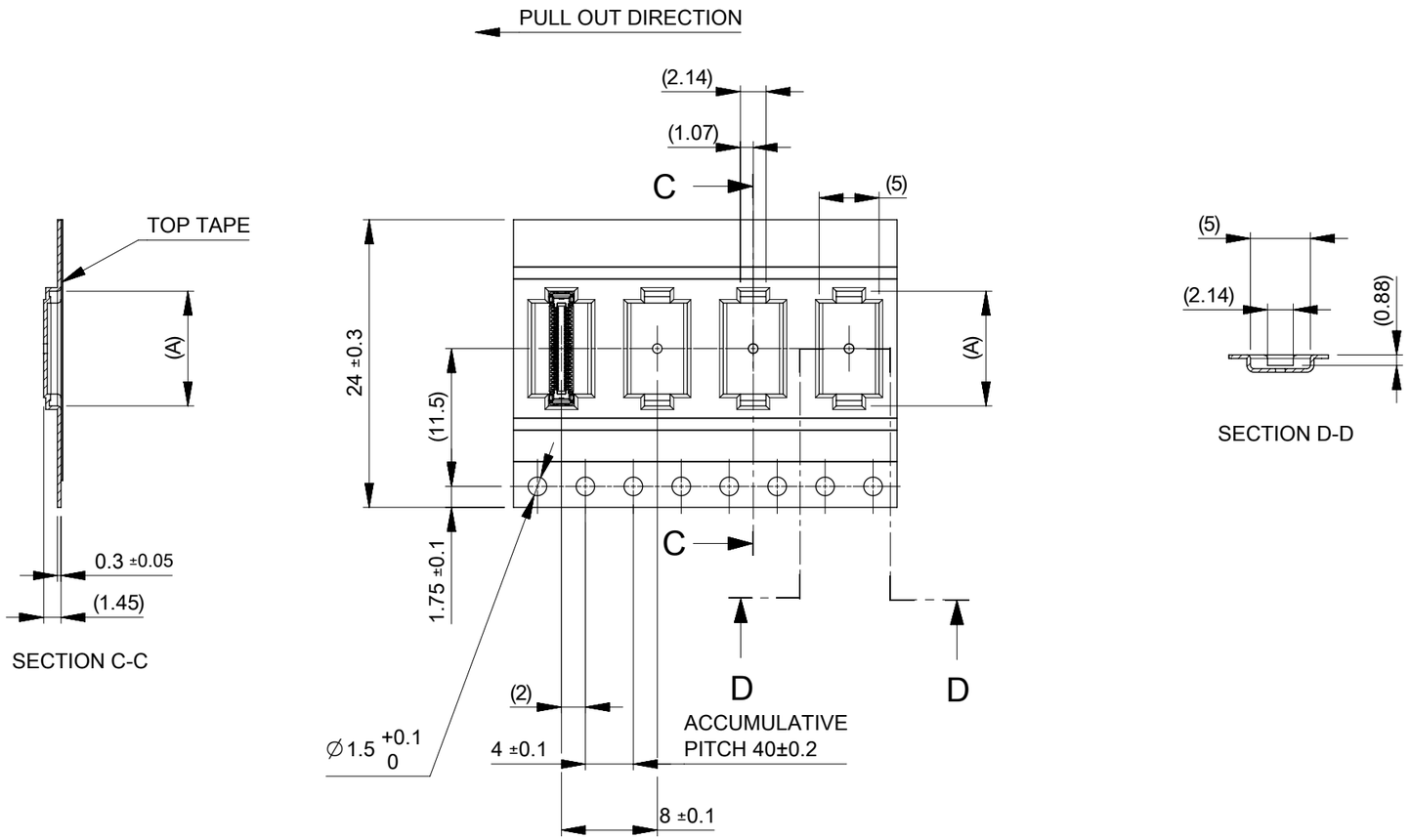

24	29.4	25.4	12.02	5052705412	○	---	54
			9.57	5052704012	○	---	40
			8.52	5052703412	○	---	34
キャリアテープ幅 CARRIER TAPE WIDTH	C	B	(A)	EMBOSSED TAPE PACKAGE	HIGH VOL. TOOL	LOW VOL. TOOL	CIRCUIT
				ORDER NO.	SAMPLE PREPARATION ○:TOOLED △:WORK IN PROCESS ---:TOOLING TO BE CONFIRMED		

THIS DRAWING CONTAINS INFORMATION THAT IS PROPRIETARY TO MOLEX ELECTRONIC TECHNOLOGIES, LLC AND SHOULD NOT BE USED WITHOUT WRITTEN PERMISSION

DIMENSION UNITS	SCALE
mm	NTS

GENERAL TOLERANCES (UNLESS SPECIFIED)

ANGULAR TOL	±	3.0 °
4 PLACES	±	0.03
3 PLACES	±	0.03
2 PLACES	±	0.05
1 PLACE	±	0.1
0 PLACES	±	0.2

DRAFT WHERE APPLICABLE MUST REMAIN WITHIN DIMENSIONS

CURRENT REV DESC: REMOVED OBSOLETED PART NUMBER AS PER PCN#509450.

EC NO: 694111
DRWN: SANTHN 2022/02/02
CHK'D: GGA 2022/03/31
APPR: GGA 2022/03/31

INITIAL REVISION:
DRWN: FSATO 2017/10/18
APPR: MSASAO 2017/11/02

molex

0.35 BB H=0.8 SSB8RP REC EMBSTP PKG

PRODUCT CUSTOMER DRAWING

DOCUMENT NUMBER	DOC TYPE	DOC PART	REVISION
5052700001-SD	PSD	000	A1

THIRD ANGLE PROJECTION	DRAWING	SERIES	MATERIAL NUMBER	CUSTOMER	SHEET NUMBER
	A3-SIZE	505270	SEE CHART	GENERAL	3 OF 3

DOCUMENT STATUS	P1	RELEASE DATE	2022/03/31 10:33:22

FORMAT: master-tb-prod-A3
REVISION: J1
DATE: 2021/05/01

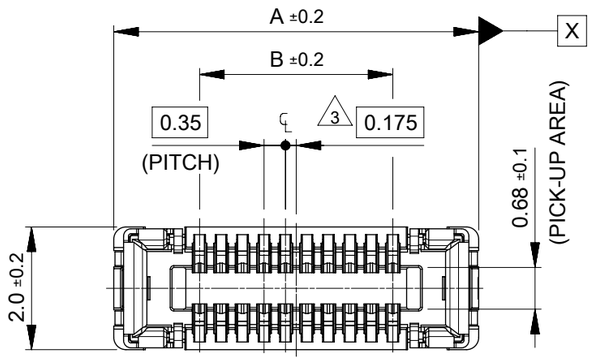

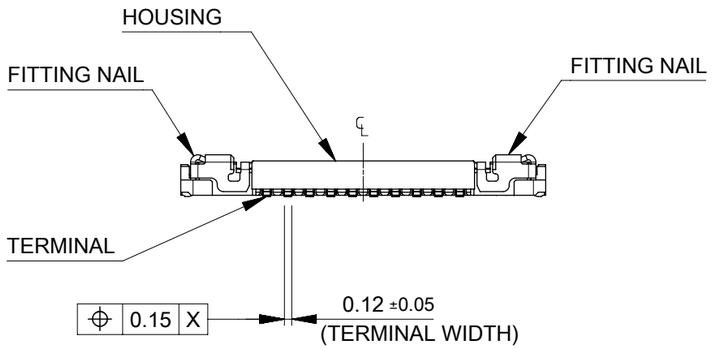

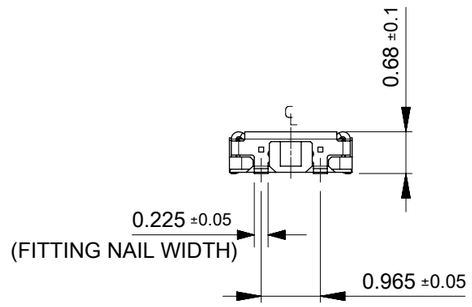

NOTES

1. MATERIAL
   HOUSING : LIQUID CRYSTAL POLYMER UL94V-0(COLOR : BLACK)
   TERMINAL : COPPER ALLOY
   FITTING NAIL : COPPER ALLOY
2. PLATING
   TERMINAL :
   GOLD
   UNDER PLATING : NICKEL
   *DIVIDE INTO PARTS THE GOLD PLATING OF THE CONTACT
   AND THE TAIL PART BY THE NICKEL PLATING.
   FITTING NAIL :
   GOLD(ONLY CONTACT AND TAIL PART)
   UNDER PLATING : NICKEL
3. APPLY FOR (CIRCUIT/2)=EVEN
4. MATE WITH : 505070**22/**42 (H=0.7) , 505274**12/**42 (H=0.8)
5. TAIL AND FITTING NAIL COPLANARITY TO BE 0.08MAXIMUM.
6. PROHIBITED AREA OF PATTERN WIRING AND SOLDER.
   (FOR EACH AREA, THE WIRING THAT TOUCHES ON THE SOLDER
   CAN BE ATTACHED, THEN COVERED WITH A FILM TO KEEP SOLDER OUT.)
7. THIS DIMENSION SHOWS THE DIMENSION BETWEEN SOLDERING SURFACE OF SOLDER TAILS.

9.1	11.9	5052705412	○	---	54
6.65	9.45	5052704012	○	---	40
5.6	8.4	5052703412	○	---	34
4.9	7.7	5052703012	○	---	30
3.85	6.65	5052702412	○	---	24
3.15	5.95	5052702012	○	---	20
2.45	5.25	5052701612	○	---	16
1.4	4.2	5052701012	○	---	10
0.7	3.5	5052700612	○	---	6
B	A	EMBOSSED TAPE PACKAGE	MASS PRODUCTION	LOW VOL.TOOL	CIRCUIT
		ORDER No.	SMAPLE PREPARATION ○:TOOLED △:WORK IN PROCESS ---:TOOLING TO BE CONFIRMED		
		CONNECTOR SERIES No. : 505270**09			

THIS DRAWING CONTAINS INFORMATION THAT IS PROPRIETARY TO MOLEX ELECTRONIC TECHNOLOGIES, LLC AND SHOULD NOT BE USED WITHOUT WRITTEN PERMISSION

DIMENSION UNITS	mm
SCALE	10:1
GENERAL TOLERANCES (UNLESS SPECIFIED)	
ANGULAR TOL	± 3.0 °
4 PLACES	± 0.03
3 PLACES	± 0.03
2 PLACES	± 0.05
1 PLACE	± 0.1
0 PLACES	± 0.2
DRAFT WHERE APPLICABLE MUST REMAIN WITHIN DIMENSIONS	

CURRENT REV DESC: REMOVED OBSOLETED PART NUMBER AS PER PCN#509450.

EC NO: 694111
DRWN: SANTHN 2022/02/02
CHK'D: GGA 2022/03/31
APPR: GGA 2022/03/31

INITIAL REVISION:
DRWN: FSATO 2017/10/18
APPR: MSASAO 2017/11/02

molex

0.35 BB CONN. H=0.8 SSB8RP REC. ASSY

PRODUCT CUSTOMER DRAWING

DOCUMENT NUMBER	DOC TYPE	DOC PART	REVISION
5052701001-SD	PSD	000	B1

THIRD ANGLE PROJECTION	DRAWING	SERIES	MATERIAL NUMBER	CUSTOMER	SHEET NUMBER
	A3-SIZE	505270	SEE CHART	GENERAL	1 OF 2

DOCUMENT STATUS	P1	RELEASE DATE	2022/03/31 10:33:23

FORMAT: master-ib-prod-A3
REVISION: J1
DATE: 2021/05/01

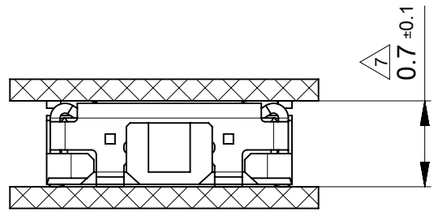

MATED CONDITION (505270/505070)

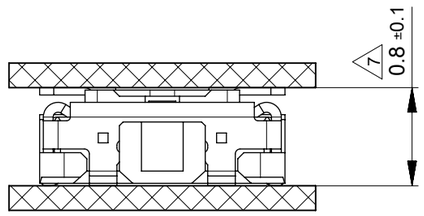

MATED CONDITION (505270/505274)

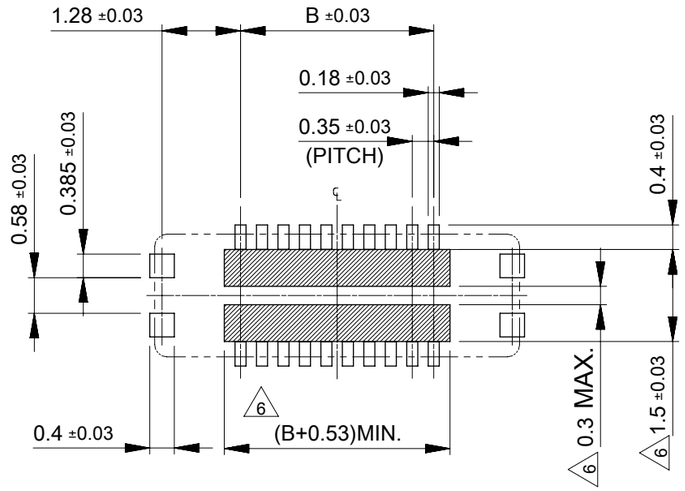

RECOMMENDED P.W.BOARD PATTERN LAYOUT (REFERENCE)

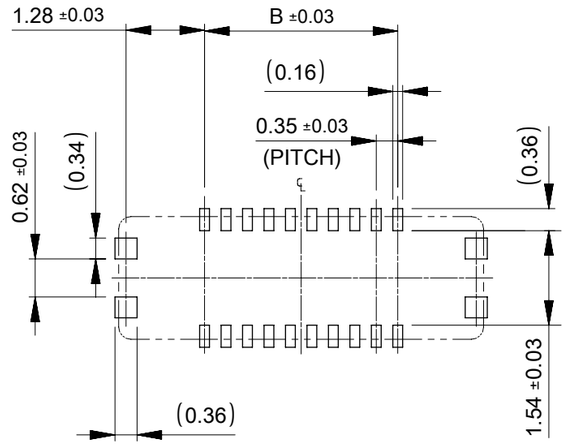

RECOMMENDED METAL MASK LAYOUT (REFERENCE)

RECOMMENDED THICKNESS OF METAL MASK : t=0.08mm
RECOMMENDED OPEN APERTURE RATIO OF METAL MASK : 80%

THIS DRAWING CONTAINS INFORMATION THAT IS PROPRIETARY TO MOLEX ELECTRONIC TECHNOLOGIES, LLC AND SHOULD NOT BE USED WITHOUT WRITTEN PERMISSION

DIMENSION UNITS	SCALE
mm	10:1

GENERAL TOLERANCES (UNLESS SPECIFIED)		
ANGULAR TOL	±	3.0 °
4 PLACES	±	0.03
3 PLACES	±	0.03
2 PLACES	±	0.05
1 PLACE	±	0.1
0 PLACES	±	0.2

DRAFT WHERE APPLICABLE MUST REMAIN WITHIN DIMENSIONS

CURRENT REV DESC: REMOVED OBSOLETED PART NUMBER AS PER PCN#509450.

EC NO: 694111
DRWN: SANTHN 2022/02/02
CHK'D: GGA 2022/03/31
APPR: GGA 2022/03/31

INITIAL REVISION:
DRWN: FSATO 2017/10/18
APPR: MSASAO 2017/11/02

molex

0.35 BB CONN. H=0.8 SSB8RP REC. ASSY

PRODUCT CUSTOMER DRAWING

DOCUMENT NUMBER	DOC TYPE	DOC PART	REVISION
5052701001-SD	PSD	000	B1

THIRD ANGLE PROJECTION	DRAWING	SERIES	MATERIAL NUMBER	CUSTOMER	SHEET NUMBER
	A3-SIZE	505270	SEE CHART	GENERAL	2 OF 2

DOCUMENT STATUS	P1	RELEASE DATE	2022/03/31 10:33:23

FORMAT: master-tb-prod-A3
REVISION: J1
DATE: 2021/05/01