CMT60H10U

60V N-Channel MOSFET

Description

Features

- Trench LV MOSFET technology
- Fast switching
- Improved dv/dt capability

Application

- Load Switch
- Power Management
- Battery Management

V_{DS}	60	V
$R_{ds(on),typ}$@V_{gs}=10V	5.8	mΩ
I_D	100	A

Top View

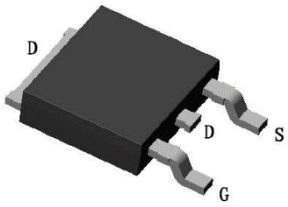

Bottom View

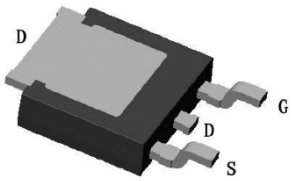

Pin Configuration

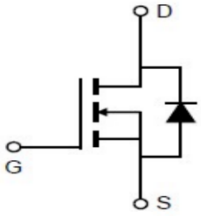

Package Marking and Ordering Information

Part	Marking	Package	Packing	Reel Size	Tape Width	Qty
CMT60H10U	T60H10U	TO252	Reel	NA	NA	2500pcs

Key Performance Parameters

Symbol	Parameter	Rating	Units
V_{DS}	Drain-Source Voltage	60	V
V_{GS}	Gate-Source Voltage	±20	V
ID@Tc=25℃	Continuous Drain Current, VGS=10V	100	A
ID@Tc=100℃	Continuous Drain Current, VGS=10V	57	A
IDM	Pulsed Drain Current[1]	340	A
EAS	Single Pulse Avalanche Energy[4]	381	mJ
PD@Tc=25℃	Total Power Dissipation	83	W
T_{STG}	Storage Temperature Range	-55 to 150	℃
T_j	Operating Junction Temperature Range	-55 to 150	℃

Thermal Data

Symbol	Parameter	Typ	Max	Units
$R_{\theta JA}$	Thermal Resistance Junction-Ambient	28	32	℃/W
$R_{\theta JC}$	Thermal Resistance Junction-Case	1.3	1.5	℃/W

Electrical Characteristics (T_J=25 ℃, Unless otherwise noted)

Symbol	Parameter	Values			Unit	Note / Test Condition
		Min.	Typ.	Max.		
BVDSS	Drain-Source Breakdown Voltage	60	--	--	V	VGS=0V, ID=250uA
RDS(ON)	Static Drain-Source On-Resistance	--	5.8	7	mΩ	VGS=10V, ID=30A
VGS(th)	Gate Threshold Voltage	2	2.7	4	V	VGS=VDS, ID=250uA
IDSS	Drain-Source Leakage Current	--	--	1	uA	VDS=60V, VGS=0V, TJ=25℃
		--	--	10	uA	VDS=48V, VGS=0V, TJ=125℃
IGSS	Gate-Source Leakage Current	--	--	±100	nA	VGS=±20V, VDS=0V
gfs	Forward Transconductance	--	55	--	S	VDS=10V, ID=30A
Rg	Gate Resistance	--	3	--	Ω	VDS=0V, VGS=0V, f=1MHz
Qg	Total Gate Charge (10V)[2,3]	--	75	--	nC	VDS=30V, VGS=10V, ID=30A
Qgs	Gate-Source Charge[2,3]	--	20	--		
Qgd	Gate-Drain Charge[2,3]	--	26	--		
Td(on)	Turn-On Delay Time[2,3]	--	10	--	ns	VDD=30V, VGS=10V, RG=1.8Ω ID=30A
Tr	Rise Time[2,3]	--	9	--		
Td(off)	Turn-Off Delay Time[2,3]	--	42	--		
Tf	Fall Time[2,3]	--	17	--		
Ciss	Input Capacitance	--	3813	--	pF	VDS=30V, VGS=0V, f=1MHz
Coss	Output Capacitance	--	264	--		
Crss	Reverse Transfer Capacitance	--	216	--		

Diode Characteristics

Symbol	Parameter	Conditions	Typ	Max	Units
Is	Continuous Source Current	VG=VD=0V, Force Current	--	100	A
Ism	Pulsed Source Current		--	340	A
V_{SD}	Diode Forward Voltage	VGS=0V, I_S=5A, TJ=25℃	--	1.1	V

Note:

1. Repetitive Rating: Pulsed width limited by maximum junction temperature.
2. The data tested by pulsed, pulse width ≦ 300us, duty cycle ≦ 2%.
3. Essentially independent of operating temperature.
4.The EAS data shows Max. rating. The test condition is V_{DD}=30V, V_{GS}=10V, L=1mH.

Typical Performance Characteristics

Fig1 Output Characteristics

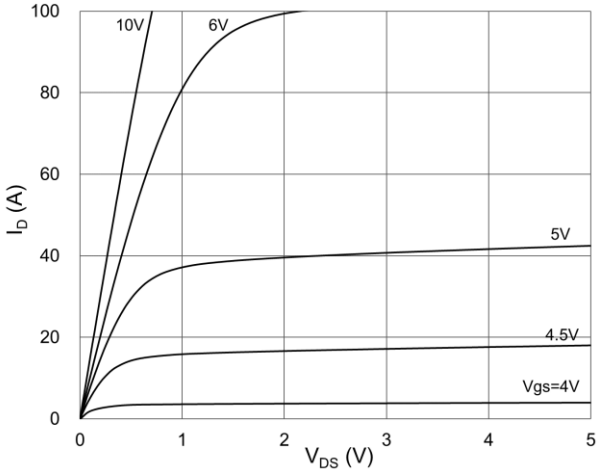

Fig2 Normalized R_{DSON} vs. T_J

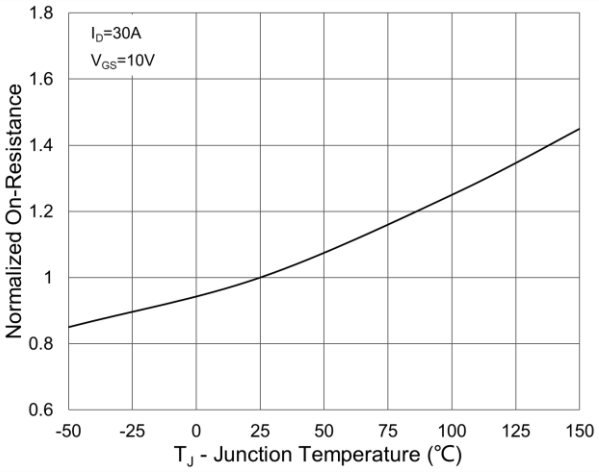

Fig3 Gate Charge Waveform

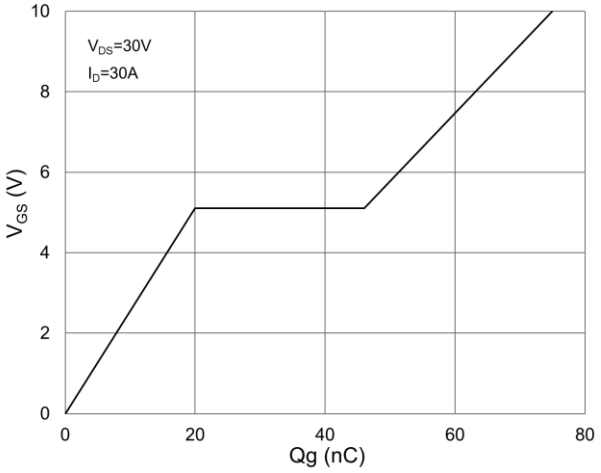

Fig4 Transfer Characteristics

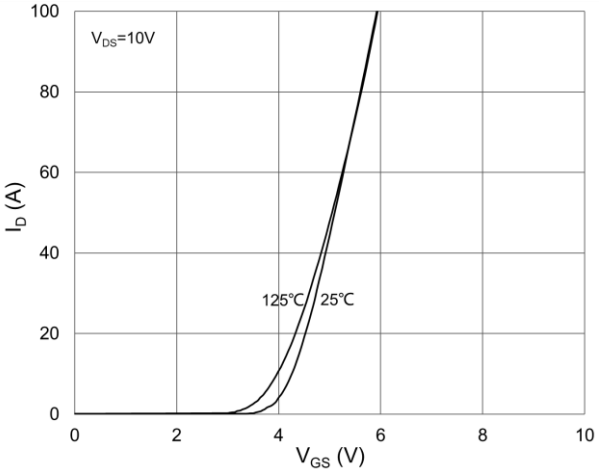

Fig5 Rds(on) vs. Drain Current and Gate Voltage

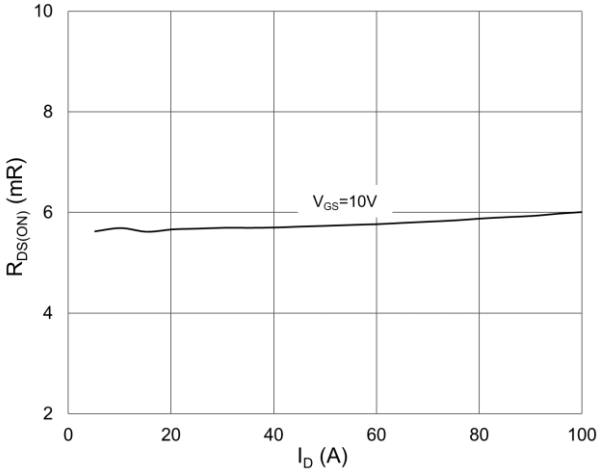

Fig6 Rds(on) vs. Gate Voltage

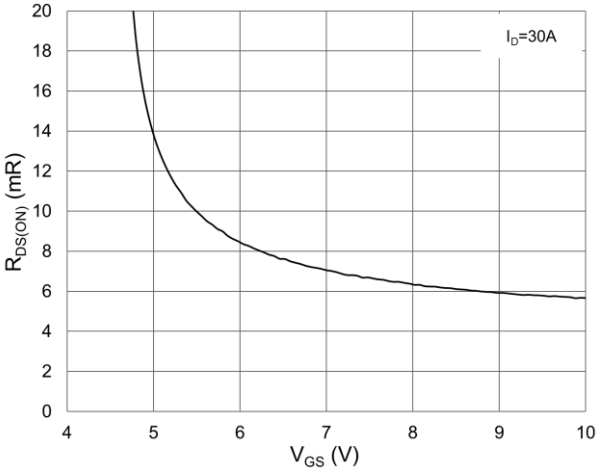

Fig7 Capacitance Characteristics

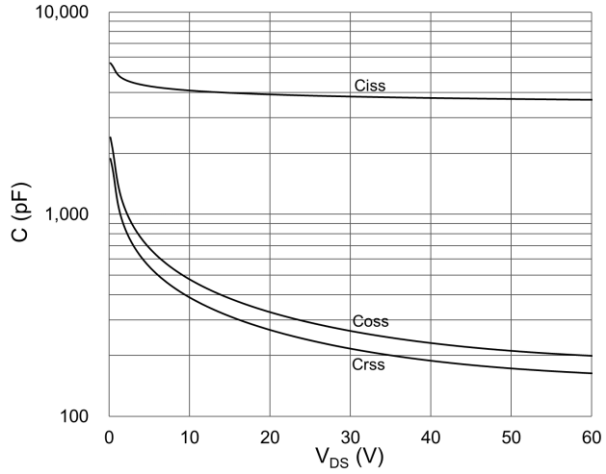

Fig8 Drain Current Derating

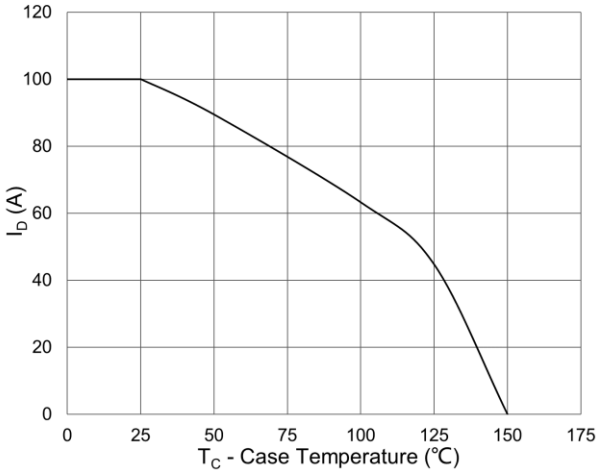

Fig9 Power Dissipation

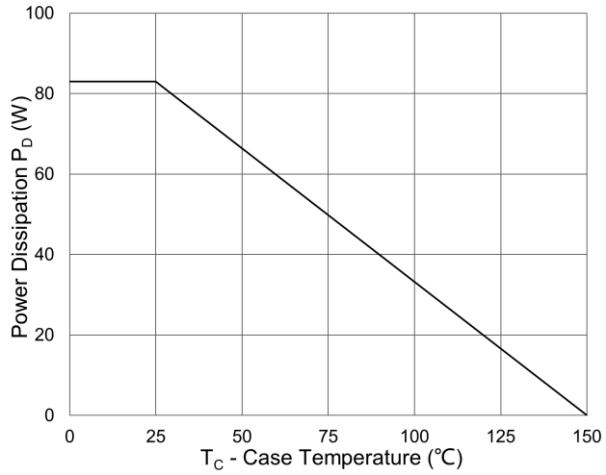

Fig10 Maximum Safe Operation Area

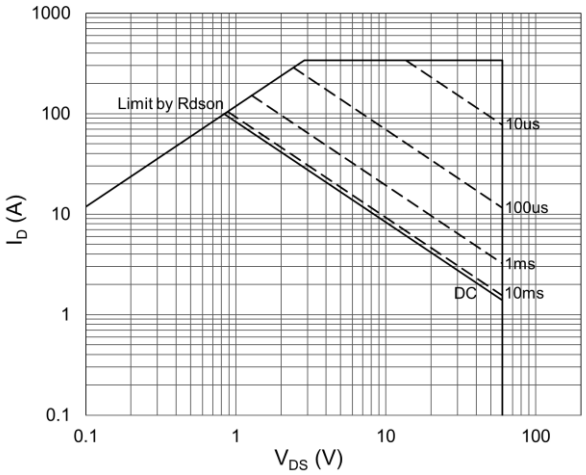

Fig11 Normalized Transient Impedance

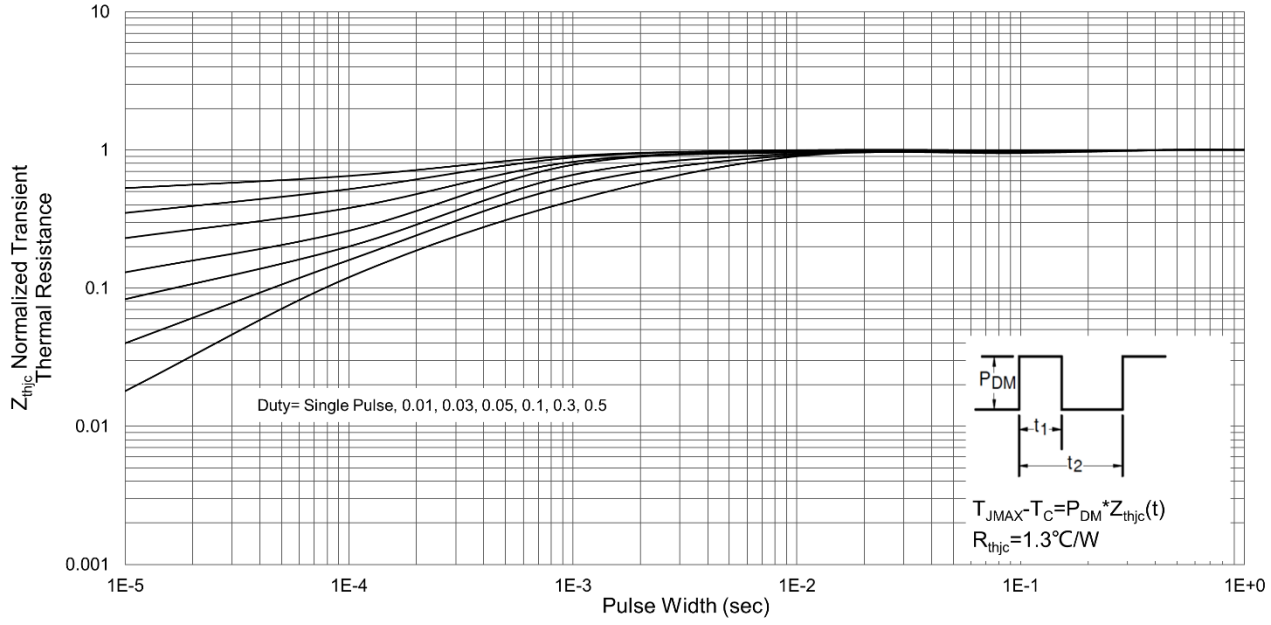

Test Circuit & Waveform

1. Unclamped Inductive Switching Test Circuit & Waveform

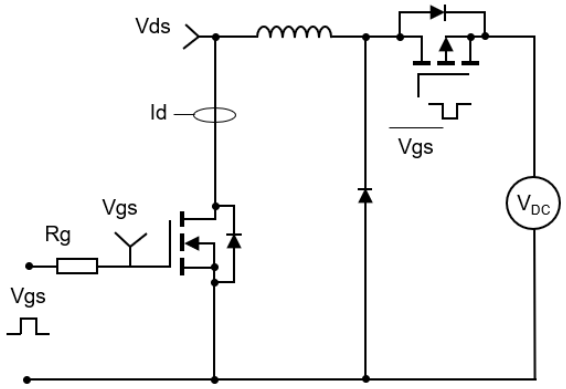

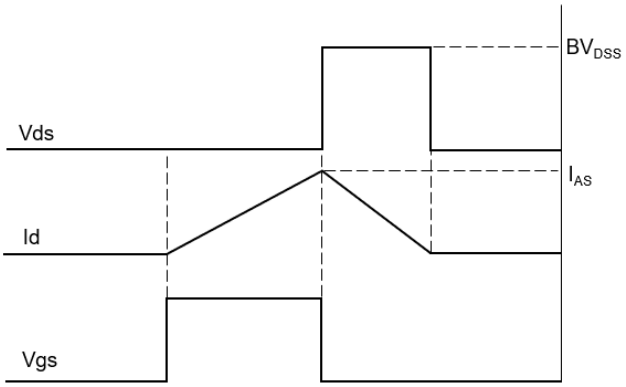

2. Gate Charge Test Circuit & Waveform

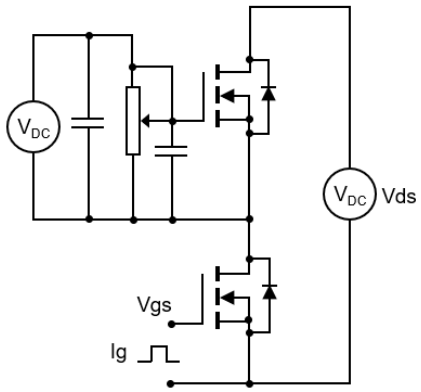

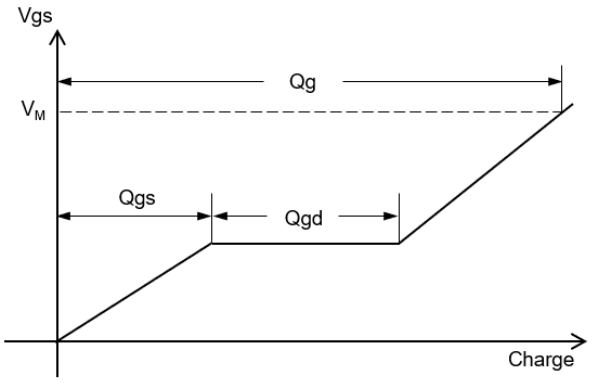

3. Resistive Switching Test Circuit & Waveform

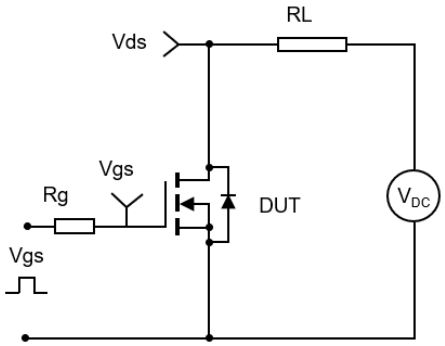

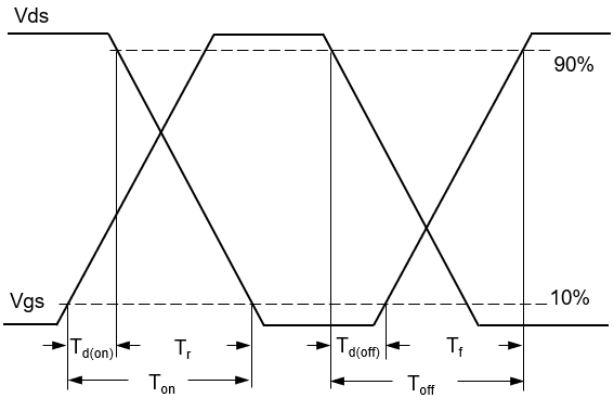

TO252 Package Information

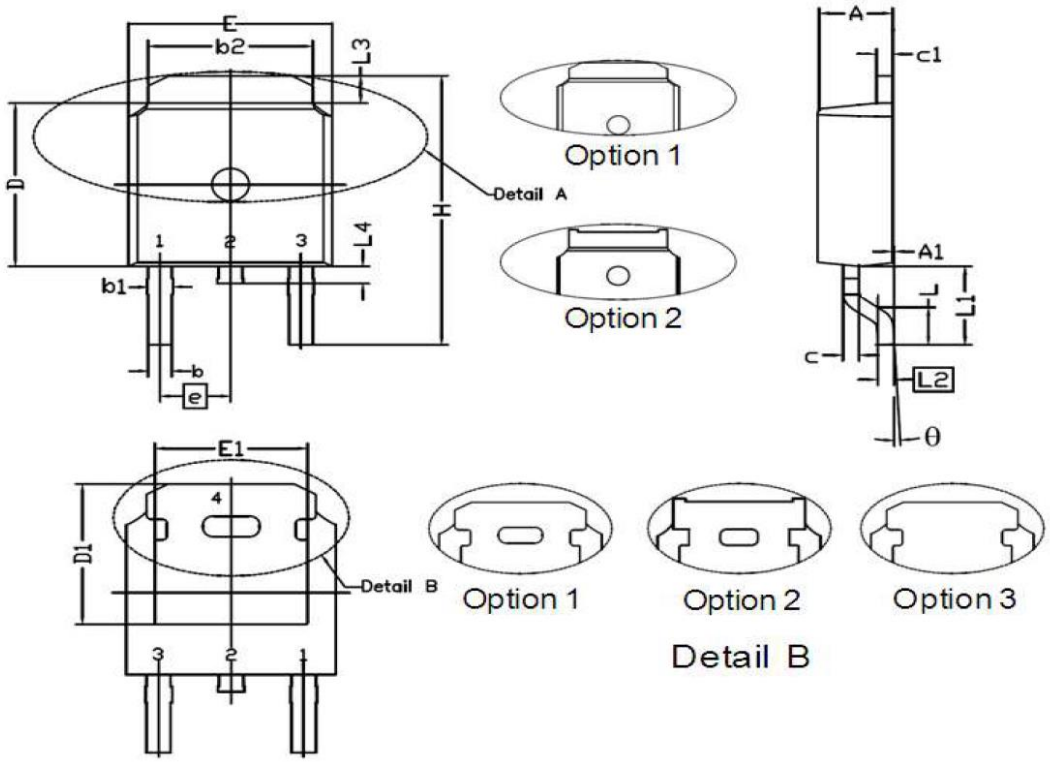

Symbol	Dimensions In Millimeters		Dimensions In Inches	
	Min.	Max.	Min.	Max.
A	2.15	2.45	0.085	0.096
A1	0.00	0.15	0.000	0.006
b	0.60	0.91	0.024	0.036
b1	0.65	1.15	0.026	0.045
b2	5.00	5.64	0.197	0.222
c	0.45	0.61	0.018	0.024
c1	0.36	0.66	0.014	0.026
D	5.80	6.30	0.228	0.248
D1	5.21	--	0.205	--
e	2.29 BSC.		0.090 BSC.	
E	6.30	6.90	0.248	0.272
E1	4.40	--	0.173	--
H	9.40	10.48	0.370	0.413
L	1.38	1.78	0.054	0.070
L1	2.92 REF		0.115 REF	
L2	0.508 BSC.		0.020 BSC.	
L3	0.72	1.35	0.028	0.053
L4	0.60	1.20	0.024	0.047
θ	0°	10°	0°	10°