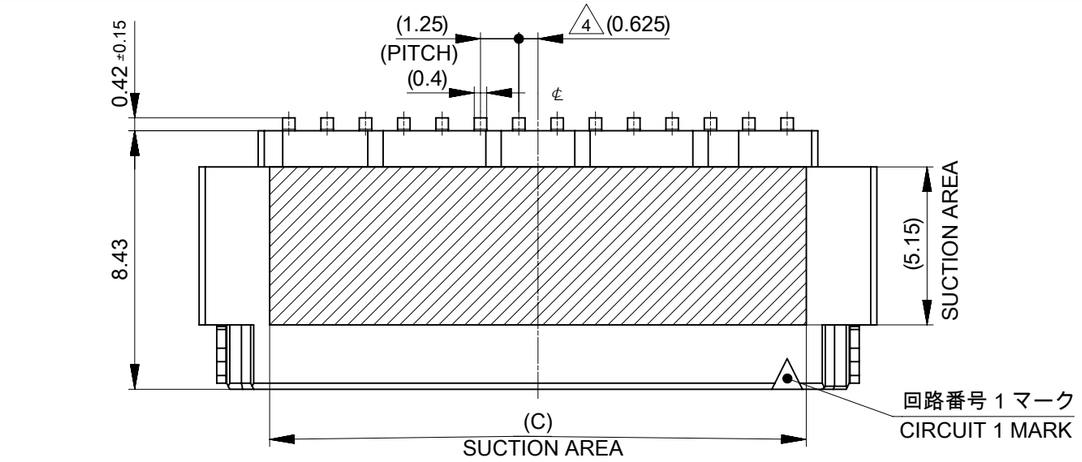

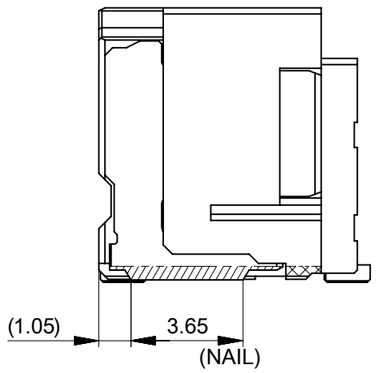

SECTION Y-Y

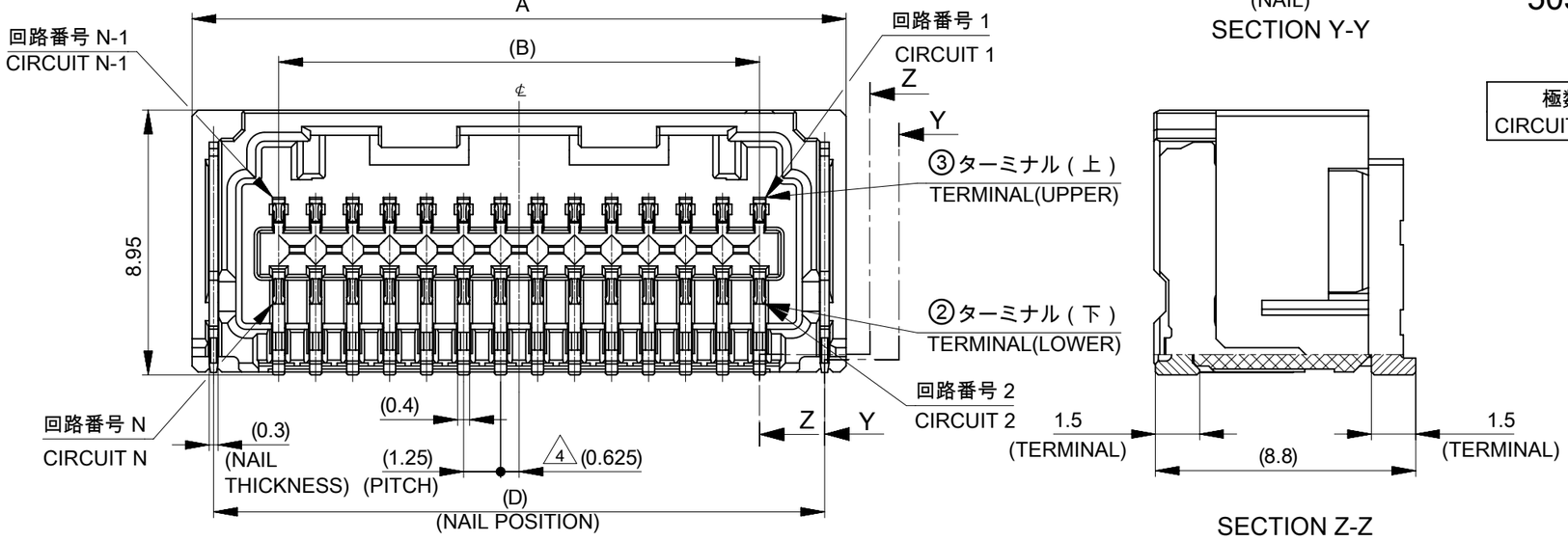

SECTION Z-Z

注記：
NOTES :

1. 材料及び仕上げ(めっき仕様)：TABLE 1, TABLE2 参照
   MATERIAL AND FINISHES (PLATING SPECIFICATION) : SEE TABLE 1, TABLE2.
2. 製品仕様書、コネクタ取扱説明書、適合嵌合相手、適合リテーナーはSHEET 4をご参照下さい。
   PLEASE REFER TO SHEET 4 FOR PRODUCT SPECIFICATION, APPLICATION SPECIFICATION, MATE WITH AND APPLICABLE RETAINER.
3. 端子テール部 及び ネイルの平坦度：0.12 MAXIMUM
   TAIL AND NAIL COPLANARITY TO BE 0.12 MAXIMUM
4. 極数 / 2 = 偶数に適合
   APPLY TO CIRCUIT SIZE / 2 = EVEN.
5. 発注番号：SHEET 4 参照
   ORDER NUMBER : PLEASE REFER TO SHEET 4

505448**7*

極数
CIRCUIT SIZE

NO.	ハウジングカラー HOUSING COLOR
0	ナチュラル(ベージュ) NATURAL(BEIGE)
1	黒 BLACK
2	赤 RED
4	青 BLUE

29.4	26.25	25	30.85	42
28.15	25	23.75	29.6	40
26.9	23.75	22.5	28.35	38
25.65	22.5	21.25	27.1	36
24.4	21.25	20	25.85	34
23.15	20	18.75	24.6	32
21.9	18.75	17.5	23.35	30
20.65	17.5	16.25	22.1	28
19.4	16.25	15	20.85	26
18.15	15	13.75	19.6	24
16.9	13.75	12.5	18.35	22
15.65	12.5	11.25	17.1	20
14.4	11.25	10	15.85	18
13.15	10	8.75	14.6	16
11.9	8.75	7.5	13.35	14
10.65	7.5	6.25	12.1	12
9.4	6.25	5	10.85	10
8.15	5	3.75	9.6	8
D	C	B	A	極数 CIRCUIT SIZE

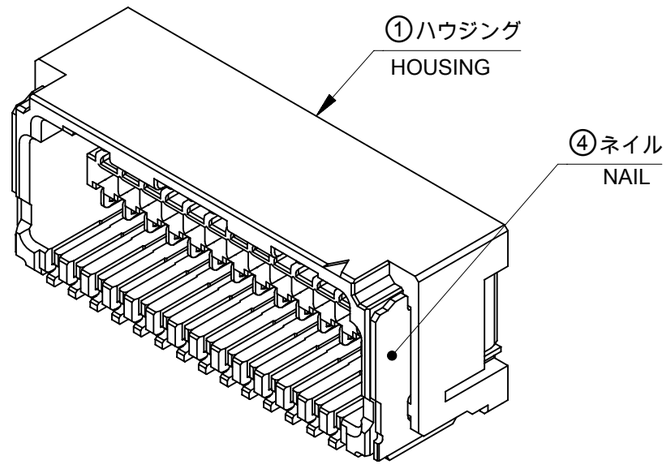

1 TABLE 1

番号 NO.	部品 PART	材質 MATERIAL
①	ハウジング HOUSING	ポリアミド(PA), UL94V-0, 色：SHEET 4参照 POLYAMIDE(PA), UL94V-0, COLOR : SEE SHEET 4
② ③ ④	ターミナル及びネイル TERMINAL AND NAIL	黄銅 BRASS
		錫ビスマスめっき：1.0 MICROMETER MINIMUM TIN-BISMUTH PLATING
		ニッケルめっき(下地めっき): 1.0 MICROMETER MINIMUM NICKEL PLATING (UNDER PLATING)

DOCUMENT STATUS	P1	RELEASE DATE	2026/02/10 10:00:16

THIS DRAWING CONTAINS INFORMATION THAT IS PROPRIETARY TO MOLEX ELECTRONIC TECHNOLOGIES, LLC AND SHOULD NOT BE USED WITHOUT WRITTEN PERMISSION

DIMENSION UNITS	SCALE
mm	NTS

GENERAL TOLERANCES (UNLESS SPECIFIED)

ANGULAR TOL	±	3.0 °
4 PLACES	±	0.2
3 PLACES	±	0.2
2 PLACES	±	0.2
1 PLACE	±	0.2
0 PLACES	±	0.2

DRAFT WHERE APPLICABLE MUST REMAIN WITHIN DIMENSIONS

CURRENT REV DESC: REMOVED OBSOLETED PART NUMBER AS PER PCN#516659

EC NO: 844075
DRWN: SAMPRS 2025/12/31
CHK'D: GGA 2026/02/10
APPR: GGA 2026/02/10

INITIAL REVISION:
DRWN: TAKAIKE 2017/01/18
APPR: TKANEKO 2017/04/03

molex

MICRO-LOCK PLUS 1.25 W/B
DUAL ROW RIGHT ANGLE SMT PLUG ASSEMBLY
TIN-BISMUTH PLATING

PRODUCT CUSTOMER DRAWING

DOCUMENT NUMBER	DOC TYPE	DOC PART	REVISION
5054480000	PSD	000	D2

THIRD ANGLE PROJECTION	DRAWING	SERIES
	A3-SIZE	505448

MATERIAL NUMBER	CUSTOMER	SHEET NUMBER
SEE TABLE	GENERAL	1 OF 4

FORMAT: master-tb-prod-A3
REVISION: J1
DATE: 2021/05/01

製品形状
PRODUCT SHAPE

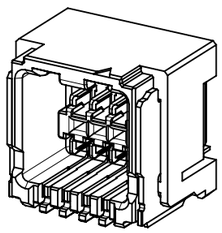

8-14極
8-14 CIRCUIT

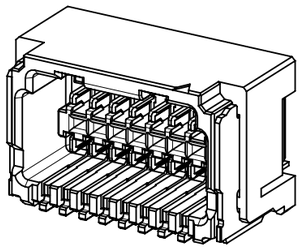

16-24極
16-24 CIRCUIT

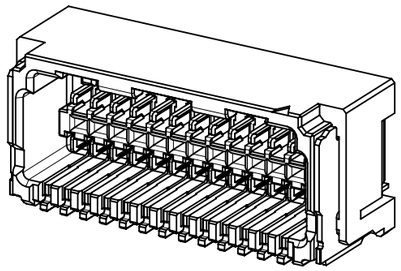

26-32極
26-32 CIRCUIT

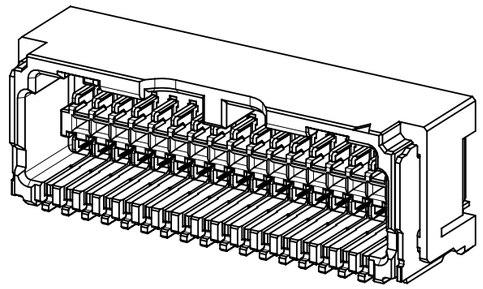

34-40極
34-40 CIRCUIT

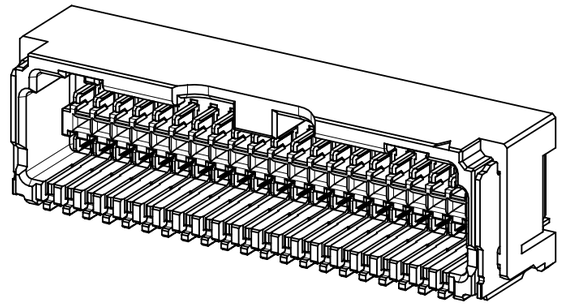

42極
42 CIRCUIT

基板パターンレイアウト
PCB PATTERN LAYOUT

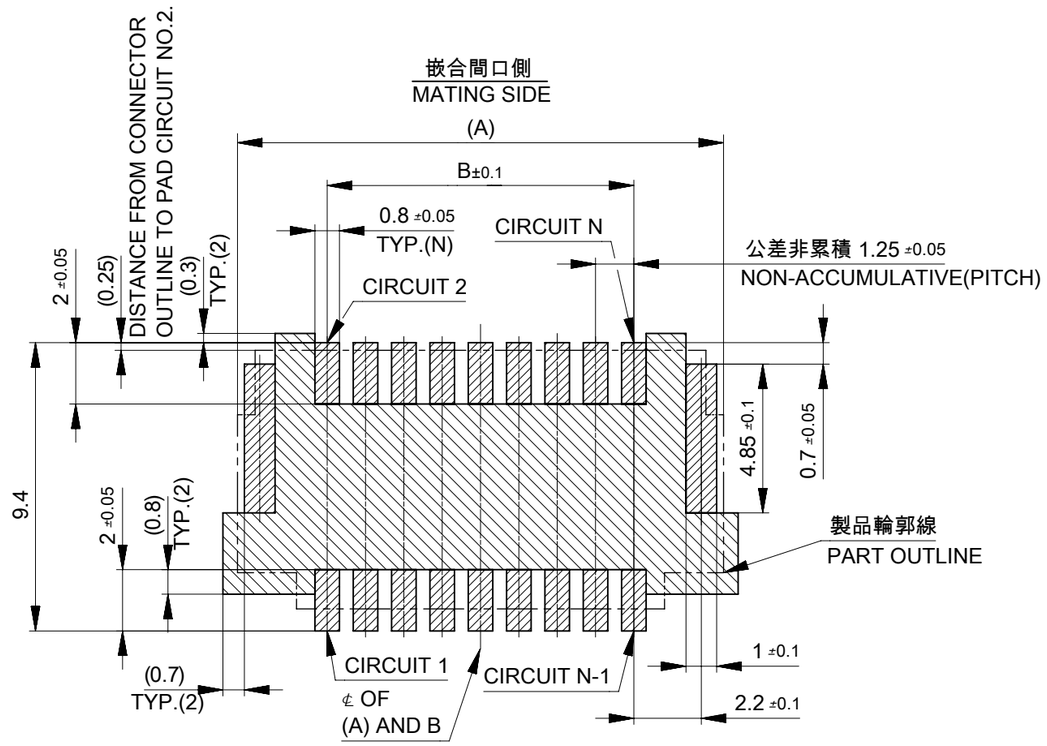

基板パターンレイアウト (参考)
(参考：基板厚 1.6mm, メタルマスク厚さ 0.15mm, マスク開口率 100%)
RECOMMEND PCB LAYOUT : COMPONENT SIDE
(REFERENCE : PCB THICKNESS 1.6mm, STENCIL THICKNESS 0.15mm, APERTURE RATIO 100%)

パターン非推奨エリア
パターンを引き回す際は、製品機能に影響がないことをご確認ください。
PATTERN IS NOT RECOMMENDED ON THE HATCHING AREA
PLEASE CHECK NOT TO HAVE PROBLEM FOR PRODUCT FUNCTION
WHEN SETTING PATTERN ON THE HATCHING AREA.

嵌合状態図
MATED CONNECTORS

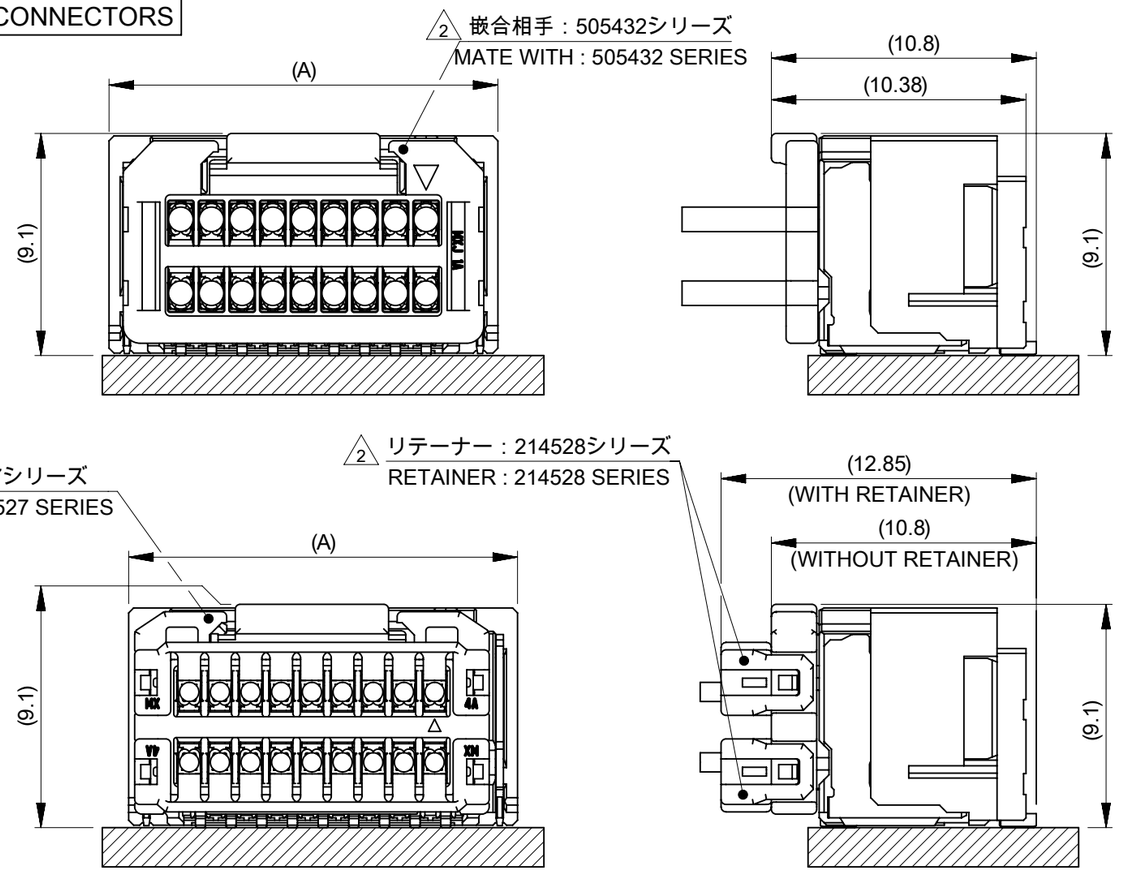

THIS DRAWING CONTAINS INFORMATION THAT IS PROPRIETARY TO MOLEX ELECTRONIC TECHNOLOGIES, LLC AND SHOULD NOT BE USED WITHOUT WRITTEN PERMISSION

DIMENSION UNITS	mm
SCALE	NTS
GENERAL TOLERANCES (UNLESS SPECIFIED)	
ANGULAR TOL	± 3.0 °
4 PLACES	± 0.2
3 PLACES	± 0.2
2 PLACES	± 0.2
1 PLACE	± 0.2
0 PLACES	± 0.2
DRAFT WHERE APPLICABLE MUST REMAIN WITHIN DIMENSIONS	

CURRENT REV DESC: REMOVED OBSOLETED PART NUMBER AS PER PCN#516659

EC NO: 844075
DRWN: SAMPRS 2025/12/31
CHK'D: GGA 2026/02/10
APPR: GGA 2026/02/10

INITIAL REVISION:
DRWN: TAKAIKE 2017/01/18
APPR: TKANEKO 2017/04/03

molex

MICRO-LOCK PLUS 1.25 W/B
DUAL ROW RIGHT ANGLE SMT PLUG ASSEMBLY
TIN-BISMUTH PLATING

PRODUCT CUSTOMER DRAWING

DOCUMENT NUMBER	DOC TYPE	DOC PART	REVISION
5054480000	PSD	000	D2

THIRD ANGLE PROJECTION	DRAWING	SERIES	MATERIAL NUMBER	CUSTOMER	SHEET NUMBER
	A3-SIZE	505448	SEE TABLE	GENERAL	2 OF 4

DOCUMENT STATUS	P1	RELEASE DATE	2026/02/10 10:00:16

FORMAT: master-lb-prod-A3
REVISION: J1
DATE: 2021/05/01

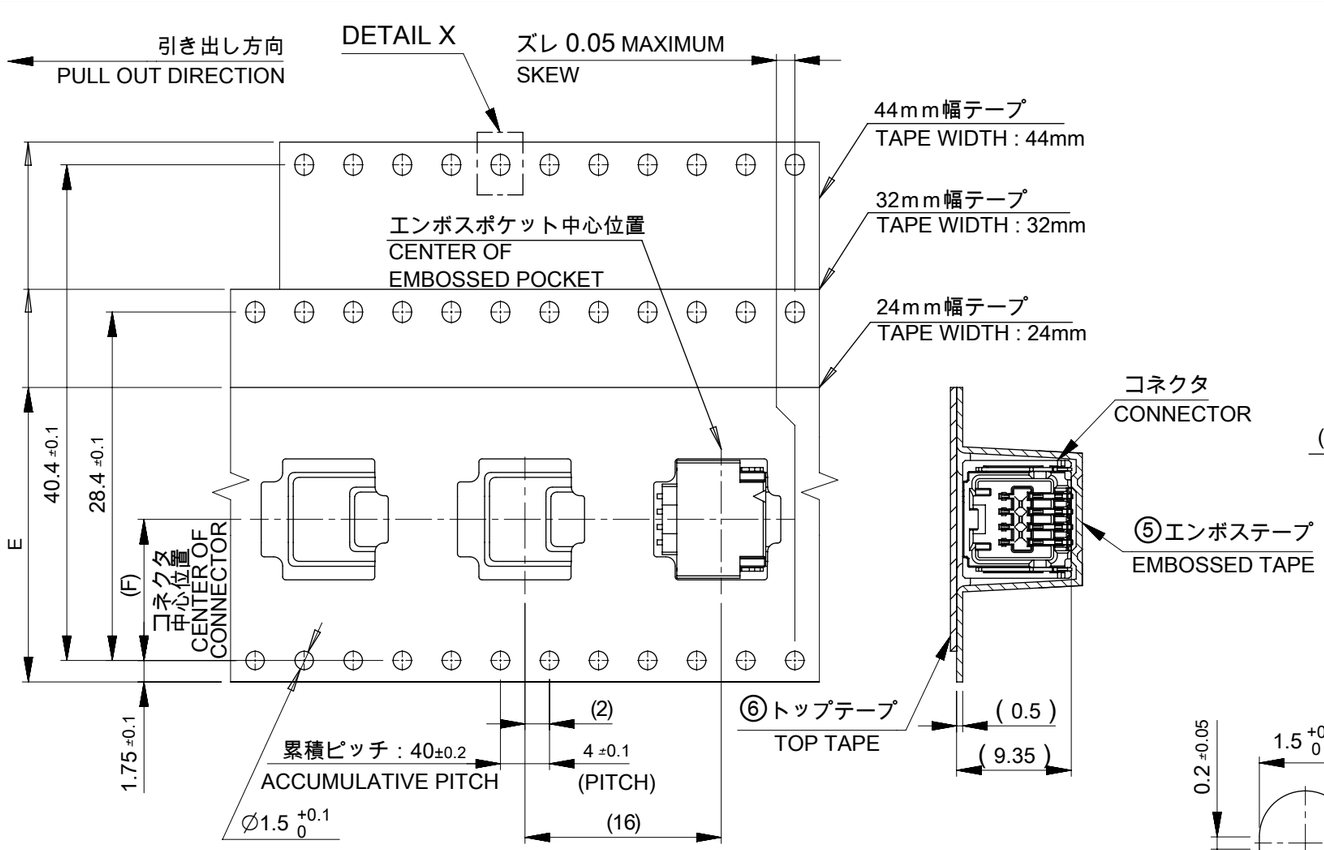

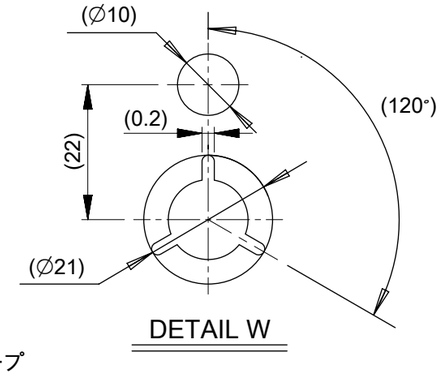

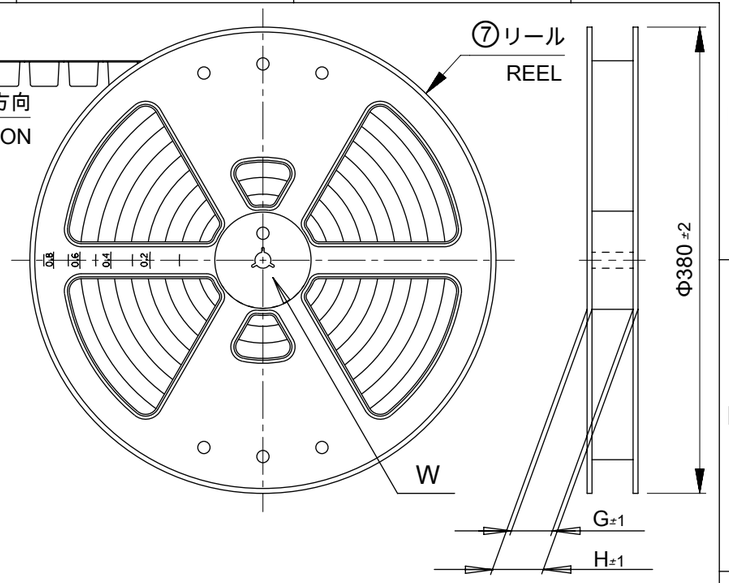

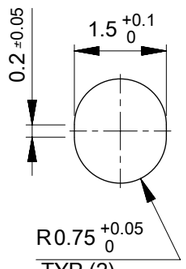

DETAIL X

注記 NOTES

6. 梱包数量　：　500個
   NUMBER OF CONNECTIORS : 500 PIECES/REEL.
7. 梱包仕様書：5054489200 PS 200
   PACKING SPECIFICATION : 5054489200 PS 200
8. リードテープ長さ
   LEAD TAPE LENGTH

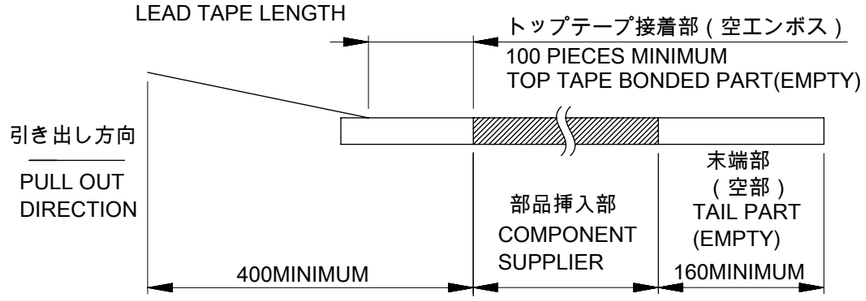

9. トップテープの剥離強度については、IEC60286-3に準拠
   TOP TAPE PEEL FORCE IS DEFINED BY IEC60286-3.

△1 TABLE 2

番号 NO.	部品 PART	材質 MATERIAL
⑤	エンボステープ EMBOSSED TAPE	ポリスチレン(PS) POLYSTYRENE(PS)
⑥	トップテープ TOP TAPE	ポリエチレン(PE)、その他 POLYETHYLENE(PE), OTHER
⑦	リール REEL	ポリスチレン(PS) ＜リサイクル材を含む＞ POLYSTYRENE(PS) ＜RECYCLE MATERIRAL CONTAINED＞

H	G	F	E	極数 CIRCUIT SIZE
49.4	45.4	20.2	44±0.3	42
				40
				38
				36
				34
				32
				30
				28
				26
37.4	33.4	14.2	32±0.3	24
				22
				20
				18
				16
29.4	25.4	11.5	24 +0.3 -0.1	14
				12
				10
				8

DOCUMENT STATUS	P1	RELEASE DATE	2026/02/10　10:00:16

THIS DRAWING CONTAINS INFORMATION THAT IS PROPRIETARY TO MOLEX ELECTRONIC TECHNOLOGIES, LLC AND SHOULD NOT BE USED WITHOUT WRITTEN PERMISSION

DIMENSION UNITS	SCALE
mm	NTS

GENERAL TOLERANCES (UNLESS SPECIFIED)

ANGULAR TOL	±	3.0 °
4 PLACES	±	0.2
3 PLACES	±	0.2
2 PLACES	±	0.2
1 PLACE	±	0.2
0 PLACES	±	0.2

DRAFT WHERE APPLICABLE MUST REMAIN WITHIN DIMENSIONS

CURRENT REV DESC: REMOVED OBSOLETED PART NUMBER AS PER PCN#516659

EC NO: 844075
DRWN: SAMPRS 2025/12/31
CHK'D: GGA 2026/02/10
APPR: GGA 2026/02/10

INITIAL REVISION:
DRWN: TAKAIKE 2017/01/18
APPR: TKANEKO 2017/04/03

THIRD ANGLE PROJECTION | DRAWING: A3-SIZE | SERIES: 505448

molex

MICRO-LOCK PLUS 1.25 W/B
DUAL ROW RIGHT ANGLE SMT PLUG ASSEMBLY
TIN-BISMUTH PLATING

PRODUCT CUSTOMER DRAWING

DOCUMENT NUMBER	DOC TYPE	DOC PART	REVISION
5054480000	PSD	000	D2

MATERIAL NUMBER	CUSTOMER	SHEET NUMBER
SEE TABLE	GENERAL	3 OF 4

FORMAT: master-ib-prod-A3
REVISION: J1
DATE: 2021/05/01

△2 適合製品及び各種仕様書 APPLICABLE PRODUCTS AND VARIOUS SPECIFICATIONS

梱包仕様書 PACKAGING SPECIFICATION	5054489200 PS 200

適合嵌合相手 MATE WITH	シリーズ番号 SERIES NUMBER	505432	214527
	リテーナー対応 RETAINER COMPLIANT	NOT COMPLIANT	COMPLIANT (NATURAL, BLACK, RED, BLUE)
適合リテーナーシリーズ番号 APPLICABLE RETAINER SERIES NUMBER		-	214528
製品仕様書 PRODUCT SPECIFICATION		5054320000 PS 002	2145270000-PS PS 000
コネクタ取扱説明書 APPLICATION SPECIFICATION		5054320000-AS PS 000	

△5 505448**7* 製品番号一覧 PRODUCT NUMBER LIST

BLUE	RED	BLACK	NATURAL (BEIGE)	HOUSING COLOR
5054484274	5054484272	5054484271	5054484270	42
5054484074	5054484072	5054484071	5054484070	40
5054483874	5054483872	5054483871	5054483870	38
5054483674	5054483672	5054483671	5054483670	36
5054483474	5054483472	5054483471	5054483470	34
5054483274	5054483272	5054483271	5054483270	32
5054483074	5054483072	5054483071	5054483070	30
5054482874	5054482872	5054482871	5054482870	28
5054482674	5054482672	5054482671	5054482670	26
5054482474	5054482472	5054482471	5054482470	24
5054482274	5054482272	5054482271	5054482270	22
5054482074	5054482072	5054482071	5054482070	20
5054481874	5054481872	5054481871	5054481870	18
5054481674	5054481672	5054481671	5054481670	16
5054481474	5054481472	5054481471	5054481470	14
5054481274	5054481272	5054481271	5054481270	12
5054481074	5054481072	5054481071	5054481070	10
5054480874	5054480872	5054480871	5054480870	8

発注番号 ORDER NO.

梱包形態：エンボステープ梱包
PACKAGING STYLE : EMBOSSED TAPE AND REEL

極数
CIRCUIT SIZE

THIS DRAWING CONTAINS INFORMATION THAT IS PROPRIETARY TO MOLEX ELECTRONIC TECHNOLOGIES, LLC AND SHOULD NOT BE USED WITHOUT WRITTEN PERMISSION

DIMENSION UNITS	SCALE
mm	NTS

GENERAL TOLERANCES (UNLESS SPECIFIED)

ANGULAR TOL	±	3.0 °
4 PLACES	±	0.2
3 PLACES	±	0.2
2 PLACES	±	0.2
1 PLACE	±	0.2
0 PLACES	±	0.2

DRAFT WHERE APPLICABLE MUST REMAIN WITHIN DIMENSIONS

CURRENT REV DESC: REMOVED OBSOLETED PART NUMBER AS PER PCN#516659

EC NO: 844075
DRWN: SAMPRS 2025/12/31
CHK'D: GGA 2026/02/10
APPR: GGA 2026/02/10

INITIAL REVISION:
DRWN: TAKAIKE 2017/01/18
APPR: TKANEKO 2017/04/03

molex

MICRO-LOCK PLUS 1.25 W/B
DUAL ROW RIGHT ANGLE SMT PLUG ASSEMBLY
TIN-BISMUTH PLATING

PRODUCT CUSTOMER DRAWING

DOCUMENT NUMBER	DOC TYPE	DOC PART	REVISION
5054480000	PSD	000	D2

THIRD ANGLE PROJECTION	DRAWING	SERIES	MATERIAL NUMBER	CUSTOMER	SHEET NUMBER
	A3-SIZE	505448	SEE TABLE	GENERAL	4 OF 4

DOCUMENT STATUS	P1	RELEASE DATE	2026/02/10 10:00:16

FORMAT: master-ib-prod-A3
REVISION: J1
DATE: 2021/05/01