REVISION U

NOTES
1. MAX ALLOWABLE BOW: .005 IN/IN [mm/mm] AFTER ASSEMBLY.
2. TERMINAL PUSHOUT FORCE: 2 lbs. MIN.
3. MAX PIN ROTATION IN BODY: 2°.
4. Ⓒ REPRESENTS A CRITICAL DIMENSION FOR STATISTICAL PROCESS CONTROL USE.
5. CUT FLASH .010 [.25] MAX
6. TUBE POSITIONS 8–50.

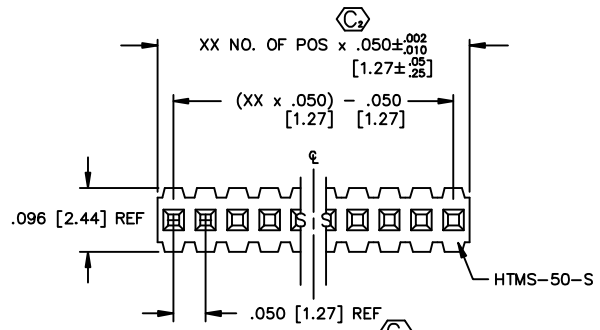

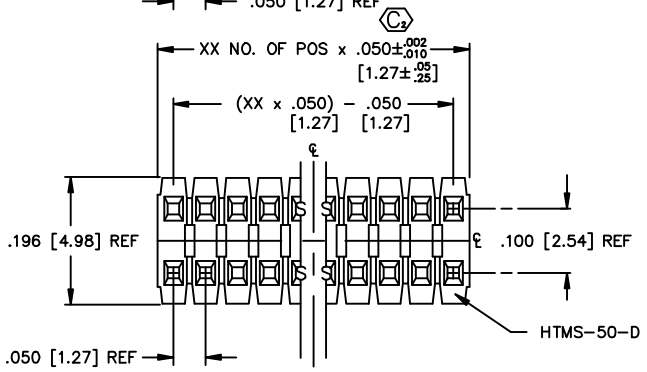

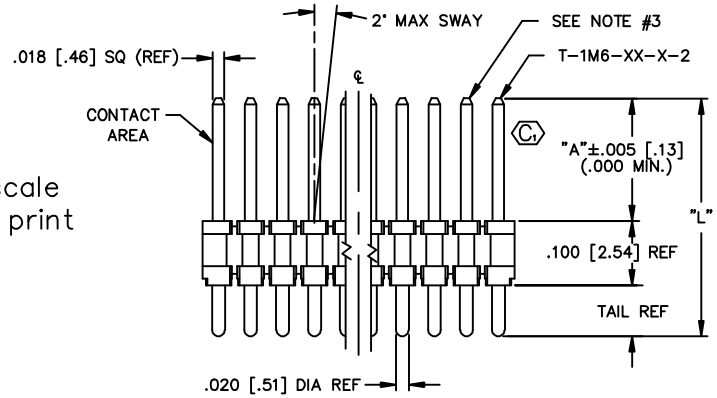

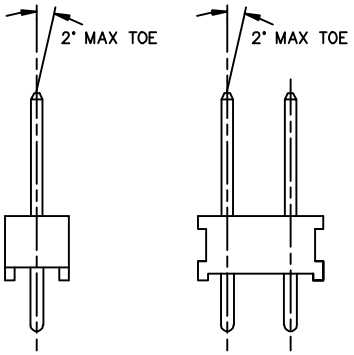

Do not scale from this print

PROPRIETARY NOTE
THIS DOCUMENT CONTAINS INFORMATION CONFIDENTIAL AND PROPRIETARY TO SAMTEC INC. AND SHALL NOT BE REPRODUCED OR TRANSFERRED TO OTHER DOCUMENTS OR DISCLOSED TO OTHERS OR USED FOR ANY PURPOSE OTHER THAN THAT FOR WHICH IT WAS OBTAINED WITHOUT THE EXPRESSED WRITTEN CONSENT OF SAMTEC INC.

UNLESS OTHERWISE NOTED
DIMENSIONS ARE IN INCHES — TOLERANCES ARE:
ONE PLACE DECIMALS ± .1 [3] — THREE PLACE DECIMALS ± .005 [.13]
TWO PLACE DECIMALS ± .01 [.3] — FOUR PLACE DECIMALS ± .0020 [.051]
ANGLES ± 2°

TITLE: TERMINAL MICRO STRIP

DWG NO: MTMS-1XX-XX-XX-X-X-XXX

SHEET 1 OF 1

MTMS–1XX–XX–XX–X–X–XXX

- BODY LENGTH SPEC: EXPRESSED IN # POS PER ROW
- TERMINAL SPEC: SEE TABLE 1
- PLATING SPECIFICATION
- ROW OPTION: –S: SINGLE (USE HTMS–50–S); –D: DOUBLE (USE HTMS–50–D)
- POST HEIGHT: XXX="A" (SEE TABLE 1) (SEE 'A' MAX. FOR MAX POST HEIGHT FOR EACH LEAD STYLE) (.000 MIN.)
- POLARIZING OPTION: XXX INDICATES POS. TO BE OMITTED (SEE FIGURE 1)

–G: GOLD, SPECIFY –G IN TERMINAL SUFFIX –XX
–T: TIN, SPECIFY –T IN TERMINAL SUFFIX –XX
AVAILABLE ON –01, –02, –25, –51, & –52 LEAD STYLES ONLY
–S: SELECTIVE, SPECIFY –S IN TERMINAL SUFFIX –XX
–F: FLASH SELECTIVE GOLD, SPECIFY –F IN TERMINAL SUFFIX –XX
–TM: MATTE TIN, SPECIFY –T IN TERMINAL SUFFIX –XX
AVAILABLE ON –01, –02, –25, –51, & –52 LEAD STYLES ONLY
–SM: HEAVY GOLD SELECTIVE, MATTE TIN TAIL, SPECIFY –S IN TERMINAL SUFFIX –XX
–FM: FLASH GOLD SELECTIVE, MATTE TIN TAIL, SPECIFY –F IN TERMINAL SUFFIX –XX
–L: LIGHT GOLD SELECTIVE, MATTE TIN TAIL, SPECIFY –L IN TERMINAL SUFFIX –XX

FIG. 1

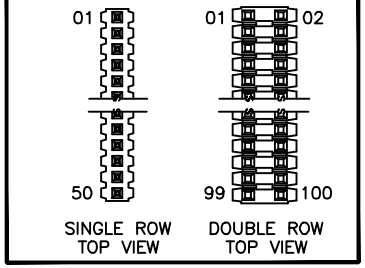

TABLE 2

PACKAGING TUBE TABLE (SEE NOTE 6)

BODY STYLE	LEAD STYLE	TUBE	PLUG
MTMS–DOUBLE STRAIGHT STYLES	–01,–21, –51,–52	PT–1–24–01–22	TP–03
	–02,–25	PT–1–24–05–38	TP–03
	–53	PT–1–24–02–66	TP–03
	–55,–56	PT–1–24–01–29	TP–24
	–54	PT–1–24–02–46	TP–03
	–57	PT–1–24–02–25	TP–03
	–58	PT–1–24–16–29	TP–07
	–59	PT–1–24–16–29	TP–07
	–60	PT–1–24–18–29	TP–07
MTMS–SINGLE STRAIGHT STYLES	–01,–21,–53	PT–1–24–01–24	TP–24
	–58,–59,–60	PT–1–24–10–03	TP–03
	–02,–25	PT–1–24–01–12	TP–12
	–51,–52	PT–1–24–01–24	TP–24
	–54,–55	PT–1–24–02–03	TP–24
	–57	PT–1–24–01–46	TP–24
	–56	PT–1–24–02–03	TP–24

TABLE 1

LEAD STYLE	TERMINAL SPEC.	'L'	'A' MAX.
–01	T–1M6–18–X–2	.450 [11.43]	.230 [5.84]
–02	T–1M6–17–X–2	.320 [8.13]	.100 [2.54]
–25	T–1M6–25–X–2	.330 [8.38]	.125 [3.18]
–51	T–1M6–02–X–2	.410 [10.41]	.190 [4.83]
–52	T–1M6–12–X–2	.425 [10.80]	.205 [5.21]
–53	T–1M6–04–X–2	.505 [12.83]	.285 [7.24]
–54	T–1M6–14–X–2	.555 [14.10]	.335 [8.51]
–55	T–1M6–03–X–2	.610 [15.49]	.390 [9.91]
–56	T–1M6–13–X–2	.625 [15.88]	.405 [10.29]
–57	T–1M6–19–X–2	.650 [16.51]	.430 [10.92]
–58	T–1M6–05–X–2	.705 [17.91]	.485 [12.32]
–59	T–1M6–15–X–2	.755 [19.18]	.535 [13.59]
–60	T–1M6–16–X–2	.825 [20.96]	.605 [15.37]

samtec
520 PARK EAST BLVD. NEW ALBANY, INDIANA 47150
PHONE (812) 944–6733 P.O. BOX 1147
CODE 55322

EXISPROD\ASSEMBLY\050 MTMS–ASM

MADE BY: GREG REIDINGER 5–8–91
CHECKED BY: McCARTIN
ENG. APPROVAL: DEM

MTMS-1XX-XX-XX-X-X-XXX
SHEET 1 OF 1