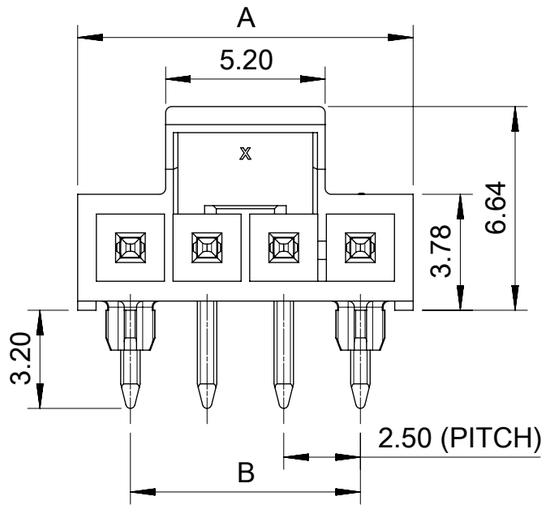

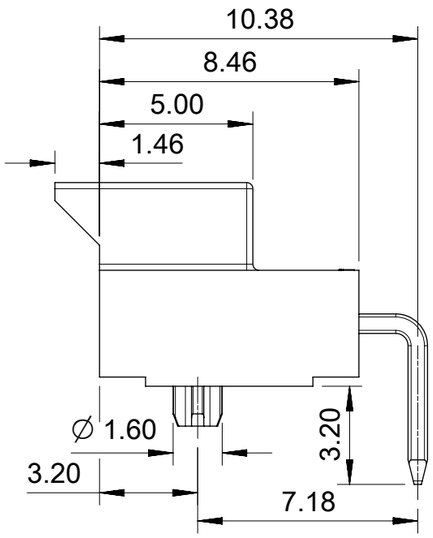

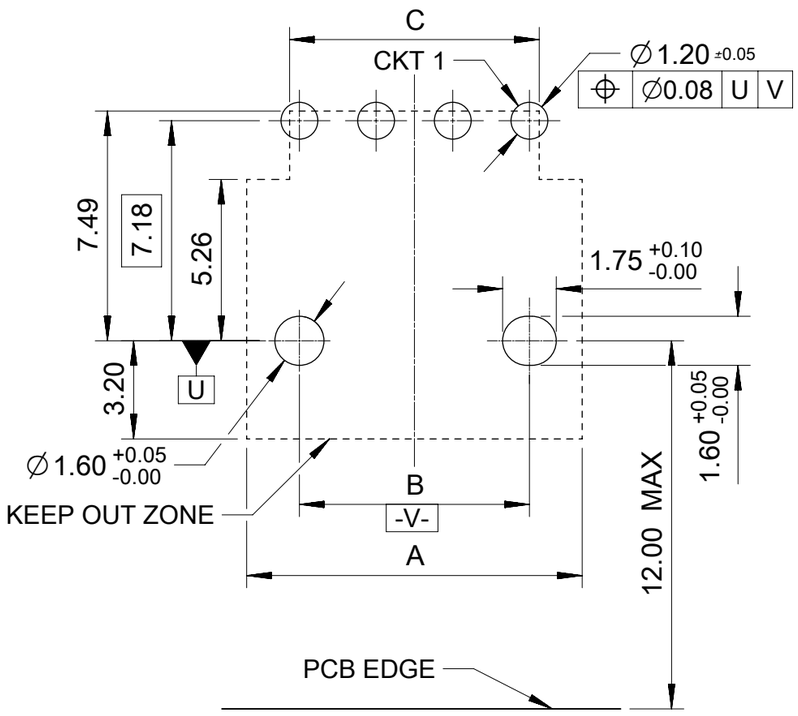

RECOMMENDED PCB(CONNECTOR SIDE VIEW)
THICKNESS=1.6 TO 2.4 MM.

OPTION 1: LATCH FLUSH WITH PCB EDGE.
OPTION 2: HOUSING BODY FLUSH WITH PCB EDGE.

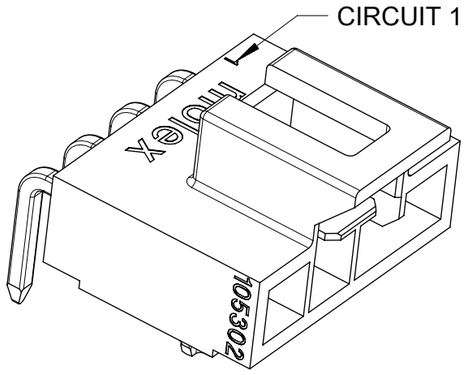

THIS DRAWING CONTAINS INFORMATION THAT IS PROPRIETARY TO MOLEX ELECTRONIC TECHNOLOGIES, LLC AND SHOULD NOT BE USED WITHOUT WRITTEN PERMISSION

DIMENSION UNITS	SCALE
mm	NTS

GENERAL TOLERANCES (UNLESS SPECIFIED)

ANGULAR TOL	± 3.0 °
4 PLACES	±
3 PLACES	± 0.1
2 PLACES	± 0.2
1 PLACE	± 0.3
0 PLACES	±

DRAFT WHERE APPLICABLE MUST REMAIN WITHIN DIMENSIONS

CURRENT REV DESC:

EC NO: 826596
DRWN: LEOW 2025/06/19
CHK'D: XQZHANG 2025/06/26
APPR: XQZHANG 2025/06/26

INITIAL REVISION:
DRWN: GLLI 2014/07/16
APPR: AYIN 2015/04/08

molex

HEADER OF NANO-FIT, S/R, R/A POWER CONNECTOR

PRODUCT CUSTOMER DRAWING

DOCUMENT NUMBER	DOC TYPE	DOC PART	REVISION
SD-105313-100	PSD	000	J1

THIRD ANGLE PROJECTION	DRAWING	SERIES	MATERIAL NUMBER	CUSTOMER	SHEET NUMBER
	A3-SIZE	105313	SEE TABLE	GENERAL MARKET	1 OF 5

DOCUMENT STATUS	P1	RELEASE DATE	2025/06/26 09:45:45

FORMAT: master-tb-prod-A3
REVISION: J1
DATE: 2021/05/01

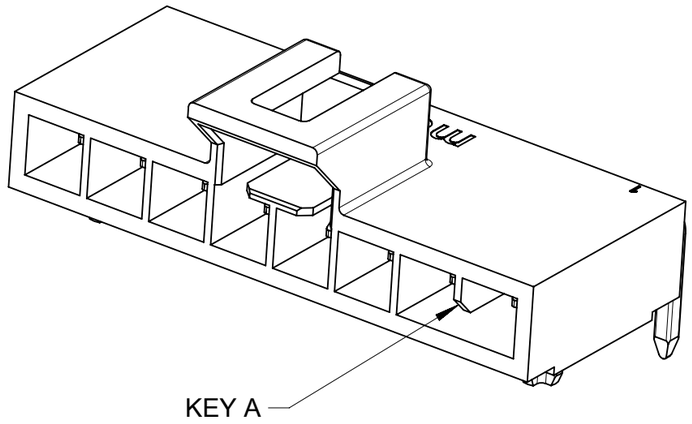

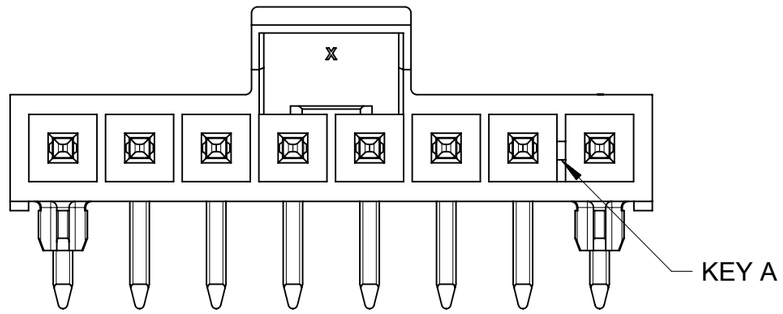

BLACK

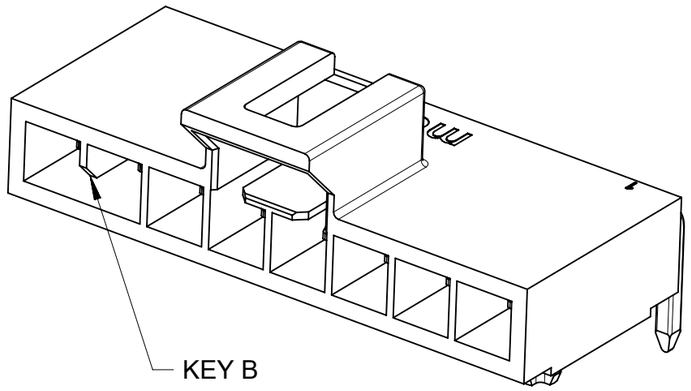

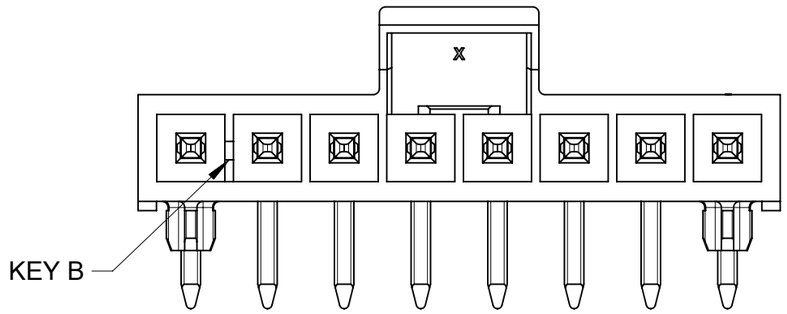

NATURAL

COLOR OPTION

THIS DRAWING CONTAINS INFORMATION THAT IS PROPRIETARY TO MOLEX ELECTRONIC TECHNOLOGIES, LLC AND SHOULD NOT BE USED WITHOUT WRITTEN PERMISSION

DIMENSION UNITS	SCALE
mm	NTS

GENERAL TOLERANCES (UNLESS SPECIFIED)		
ANGULAR TOL	±	3.0 °
4 PLACES	±	
3 PLACES	±	0.1
2 PLACES	±	0.2
1 PLACE	±	0.3
0 PLACES	±	

DRAFT WHERE APPLICABLE MUST REMAIN WITHIN DIMENSIONS

CURRENT REV DESC:

EC NO: 826596
DRWN: LEOW 2025/06/19
CHK'D: XQZHANG 2025/06/26
APPR: XQZHANG 2025/06/26

INITIAL REVISION:
DRWN: GLLI 2014/07/16
APPR: AYIN 2015/04/08

molex

HEADER OF NANO-FIT, S/R, R/A POWER CONNECTOR

PRODUCT CUSTOMER DRAWING

DOCUMENT NUMBER	DOC TYPE	DOC PART	REVISION
SD-105313-100	PSD	000	J1

THIRD ANGLE PROJECTION	DRAWING	SERIES	MATERIAL NUMBER	CUSTOMER	SHEET NUMBER
	A3-SIZE	105313	SEE TABLE	GENERAL MARKET	2 OF 5

DOCUMENT STATUS	P1	RELEASE DATE	2025/06/26 09:45:45

FORMAT: master-tb-prod-A3
REVISION: J1
DATE: 2021/05/01

PART NUMBER	DIM 'A'	DIM 'B'	DIM 'C'	CKT SIZE	PLATING	LUBE
105313-1102	5.94	2.50	3.14	2	TIN	NO
105313-1103	8.44	5.00	5.64	3		
105313-1104	10.94	7.50	8.14	4		
105313-1105	13.44	10.00	10.64	5		
105313-1106	15.94	12.50	13.14	6		
105313-1107	18.44	15.00	15.64	7		
105313-1108	20.94	17.50	18.14	8		
105313-1202	5.94	2.50	3.14	2	GOLD 0.38	
105313-1203	8.44	5.00	5.64	3		
105313-1204	10.94	7.50	8.14	4		
105313-1205	13.44	10.00	10.64	5		
105313-1206	15.94	12.50	13.14	6		
105313-1207	18.44	15.00	15.64	7		
105313-1208	20.94	17.50	18.14	8		
105313-1302	5.94	2.50	3.14	2	GOLD 0.76	
105313-1303	8.44	5.00	5.64	3		
105313-1304	10.94	7.50	8.14	4		
105313-1305	13.44	10.00	10.64	5		
105313-1306	15.94	12.50	13.14	6		
105313-1307	18.44	15.00	15.64	7		
105313-1308	20.94	17.50	18.14	8		
105313-1402	5.94	2.50	3.14	2	GOLD 0.76	YES
105313-1403	8.44	5.00	5.64	3		
105313-1404	10.94	7.50	8.14	4		
105313-1405	13.44	10.00	10.64	5		
105313-1406	15.94	12.50	13.14	6		
105313-1407	18.44	15.00	15.64	7		
105313-1408	20.94	17.50	18.14	8		

COLOR: BLACK

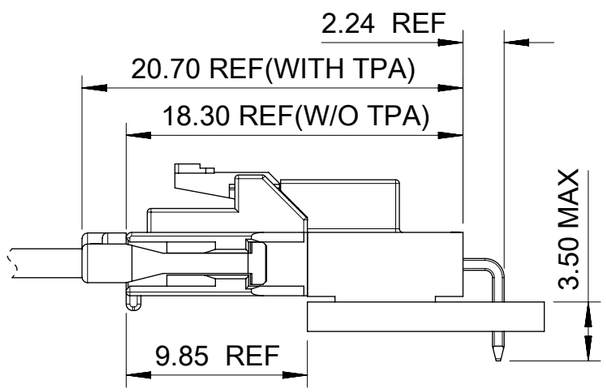

105313- * * * *

- CIRCUIT SIZE
- PLATING OPTION
  - 1 - TIN
  - 2 - GOLD 0.38
  - 3 - GOLD 0.76
  - 4 - GOLD AND LUBE
- COLOR OPTION
  - 1 - BLACK
  - 2 - NATURAL

PART NUMBER	DIM 'A'	DIM 'B'	DIM 'C'	CKT SIZE	PLATING	LUBE
105313-2102	5.94	2.50	3.14	2	TIN	NO
105313-2103	8.44	5.00	5.64	3		
105313-2104	10.94	7.50	8.14	4		
105313-2105	13.44	10.00	10.64	5		
105313-2106	15.94	12.50	13.14	6		
105313-2107	18.44	15.00	15.64	7		
105313-2108	20.94	17.50	18.14	8		
105313-2202	5.94	2.50	3.14	2	GOLD 0.38	
105313-2203	8.44	5.00	5.64	3		
105313-2204	10.94	7.50	8.14	4		
105313-2205	13.44	10.00	10.64	5		
105313-2206	15.94	12.50	13.14	6		
105313-2207	18.44	15.00	15.64	7		
105313-2208	20.94	17.50	18.14	8		
105313-2302	5.94	2.50	3.14	2	GOLD 0.76	
105313-2303	8.44	5.00	5.64	3		
105313-2304	10.94	7.50	8.14	4		
105313-2305	13.44	10.00	10.64	5		
105313-2306	15.94	12.50	13.14	6		
105313-2307	18.44	15.00	15.64	7		
105313-2308	20.94	17.50	18.14	8		
105313-2402	5.94	2.50	3.14	2	GOLD 0.76	YES
105313-2403	8.44	5.00	5.64	3		
105313-2404	10.94	7.50	8.14	4		
105313-2405	13.44	10.00	10.64	5		
105313-2406	15.94	12.50	13.14	6		
105313-2407	18.44	15.00	15.64	7		
105313-2408	20.94	17.50	18.14	8		

COLOR: NATURAL

THIS DRAWING CONTAINS INFORMATION THAT IS PROPRIETARY TO MOLEX ELECTRONIC TECHNOLOGIES, LLC AND SHOULD NOT BE USED WITHOUT WRITTEN PERMISSION

DIMENSION UNITS	SCALE
mm	NTS

GENERAL TOLERANCES (UNLESS SPECIFIED)

ANGULAR TOL	± 3.0 °
4 PLACES	±
3 PLACES	± 0.1
2 PLACES	± 0.2
1 PLACE	± 0.3
0 PLACES	±

DRAFT WHERE APPLICABLE MUST REMAIN WITHIN DIMENSIONS

CURRENT REV DESC:

EC NO: 826596
DRWN: LEOW 2025/06/19
CHK'D: XQZHANG 2025/06/26
APPR: XQZHANG 2025/06/26

INITIAL REVISION:
DRWN: GLLI 2014/07/16
APPR: AYIN 2015/04/08

molex

HEADER OF NANO-FIT, S/R, R/A POWER CONNECTOR

PRODUCT CUSTOMER DRAWING

DOCUMENT NUMBER	DOC TYPE	DOC PART	REVISION
SD-105313-100	PSD	000	J1

THIRD ANGLE PROJECTION	DRAWING	SERIES	MATERIAL NUMBER	CUSTOMER	SHEET NUMBER
	A3-SIZE	105313	SEE TABLE	GENERAL MARKET	3 OF 5

DOCUMENT STATUS	P1	RELEASE DATE	2025/06/26 09:45:45

FORMAT: master-tb-prod-A3
REVISION: J1
DATE: 2021/05/01

	2 CKT	3 CKT	4 CKT	5 CKT
BLACK	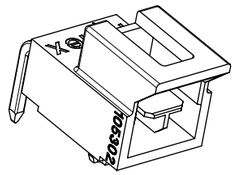	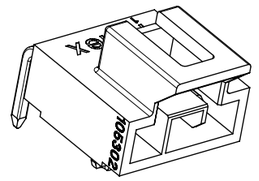	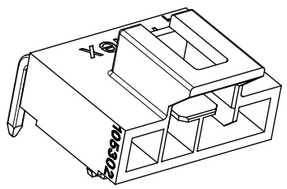	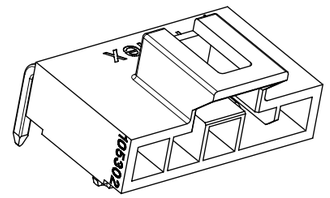
NATURAL	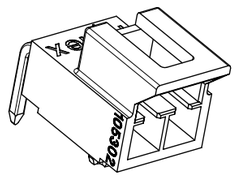	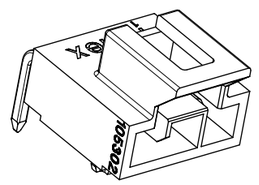	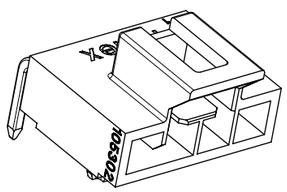	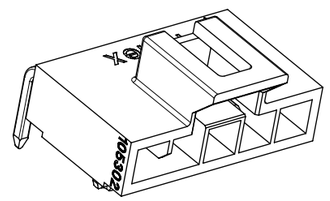

	6 CKT	7 CKT	8 CKT
BLACK	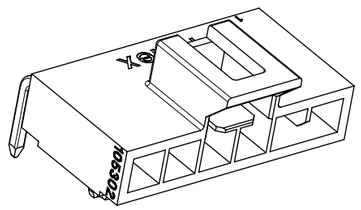	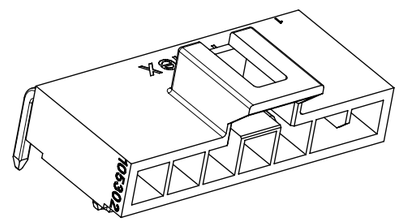	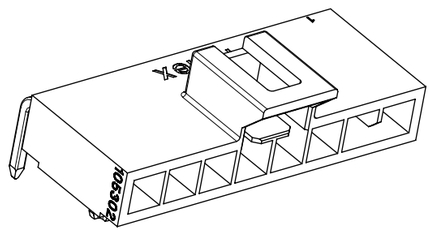
NATURAL	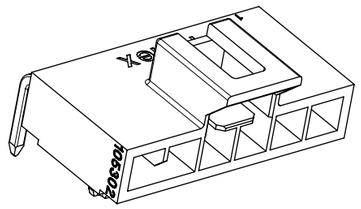	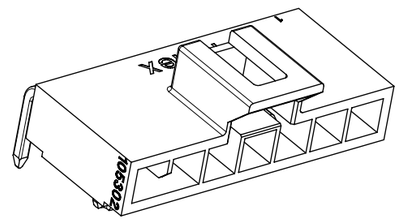	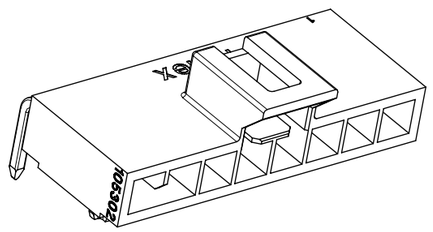

THIS DRAWING CONTAINS INFORMATION THAT IS PROPRIETARY TO MOLEX ELECTRONIC TECHNOLOGIES, LLC AND SHOULD NOT BE USED WITHOUT WRITTEN PERMISSION

DIMENSION UNITS	SCALE
mm	NTS

GENERAL TOLERANCES (UNLESS SPECIFIED)

ANGULAR TOL	±	3.0 °
4 PLACES	±	
3 PLACES	±	0.1
2 PLACES	±	0.2
1 PLACE	±	0.3
0 PLACES	±	

DRAFT WHERE APPLICABLE MUST REMAIN WITHIN DIMENSIONS

CURRENT REV DESC:

EC NO: 826596

DRWN: LEOW	2025/06/19
CHK'D: XQZHANG	2025/06/26
APPR: XQZHANG	2025/06/26

INITIAL REVISION:

DRWN: GLLI	2014/07/16
APPR: AYIN	2015/04/08

molex

HEADER OF NANO-FIT, S/R, R/A POWER CONNECTOR

PRODUCT CUSTOMER DRAWING

DOCUMENT NUMBER	DOC TYPE	DOC PART	REVISION
SD-105313-100	PSD	000	J1

THIRD ANGLE PROJECTION	DRAWING	SERIES	MATERIAL NUMBER	CUSTOMER	SHEET NUMBER
	A3-SIZE	105313	SEE TABLE	GENERAL MARKET	4 OF 5

DOCUMENT STATUS	P1	RELEASE DATE	2025/06/26 09:45:45

FORMAT: master-tb-prod-A3
REVISION: J1
DATE: 2021/05/01

NOTES FOR ALL PARTS	
1> MATERIAL: HOUSING: LCP, UL 94V-0; TERMINAL: BRASS. 2> PLATING FINISHED: TERMINAL: CONTACT AREA: a. REFLOWED MATTE TIN 1.5MICRONS MIN; b. GOLD 0.38 MICRONS MIN; c. GOLD 0.76 MICRONS MIN. SOLDER AREA: TIN 1.5 MICRONS MIN, UNDER PLATING NICKEL 1.25 MICRONS MIN. SOLDER CLIP: TIN 2.5 MICRONS MIN, UNDER PLATING NICKEL 1.25 MICRONS MIN.	3> PRODUCT SPECIFICATION: PS-105300-100. 4> PACKAGE: TRAY, PK-105309-400. 5> PRODUCT MATE WITH SERIES OF 105307 AND 226354(RECEPTACLE). 6> PARTS CONFORM TO CLASS 'B' REQUIREMENTS OF COSMETIC SPECIFICATION PS-45499-002. 7> DISCOLORATION IN THE BANDOLIER PIN CARRIER AREA OF THE PIN IS INHERENT TO THE PLATING PROCESS AND IS DUE TO THE MASKING DEFECT OF THE CARRIER, THIS DISCOLORATION IS IN A NON-FUNCTION AREA OF THE PIN AND WILL NOT AFFECT THE PERFORMANCE OF THE HEADER ASSEMBLY.

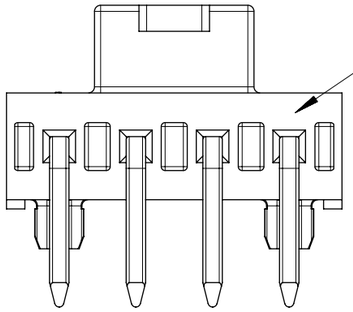

IF ANY NUMBER MARK APPEARS ON THIS SURFACE, PLEASE DISREGARD IT, IT IS NO ANY FUCTION AND NO ANY RELATION TO PIN NUMBER, IT IS JUST FOR MOLDING IDENDIFICATION.

THIS DRAWING CONTAINS INFORMATION THAT IS PROPRIETARY TO MOLEX ELECTRONIC TECHNOLOGIES, LLC AND SHOULD NOT BE USED WITHOUT WRITTEN PERMISSION

DIMENSION UNITS	SCALE
mm	NTS

GENERAL TOLERANCES (UNLESS SPECIFIED)	
ANGULAR TOL	± 3.0 °
4 PLACES	±
3 PLACES	± 0.1
2 PLACES	± 0.2
1 PLACE	± 0.3
0 PLACES	±

DRAFT WHERE APPLICABLE MUST REMAIN WITHIN DIMENSIONS

CURRENT REV DESC:

EC NO: 826596
DRWN: LEOW 2025/06/19
CHK'D: XQZHANG 2025/06/26
APPR: XQZHANG 2025/06/26

INITIAL REVISION:
DRWN: GLLI 2014/07/16
APPR: AYIN 2015/04/08

molex

HEADER OF NANO-FIT, S/R, R/A POWER CONNECTOR

PRODUCT CUSTOMER DRAWING

DOCUMENT NUMBER	DOC TYPE	DOC PART	REVISION
SD-105313-100	PSD	000	J1

THIRD ANGLE PROJECTION	DRAWING	SERIES	MATERIAL NUMBER	CUSTOMER	SHEET NUMBER
	A3-SIZE	105313	SEE TABLE	GENERAL MARKET	5 OF 5

DOCUMENT STATUS	P1	RELEASE DATE	2025/06/26 09:45:45

FORMAT: master-tb-prod-A3
REVISION: J1
DATE: 2021/05/01