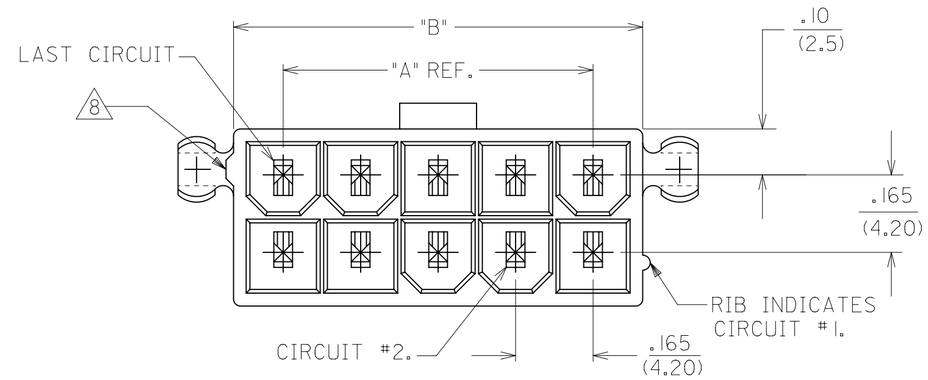


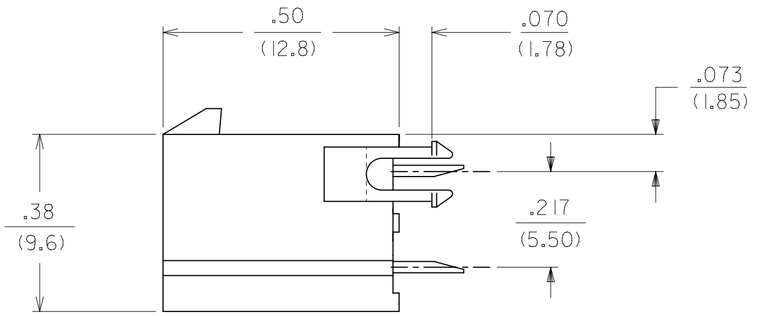


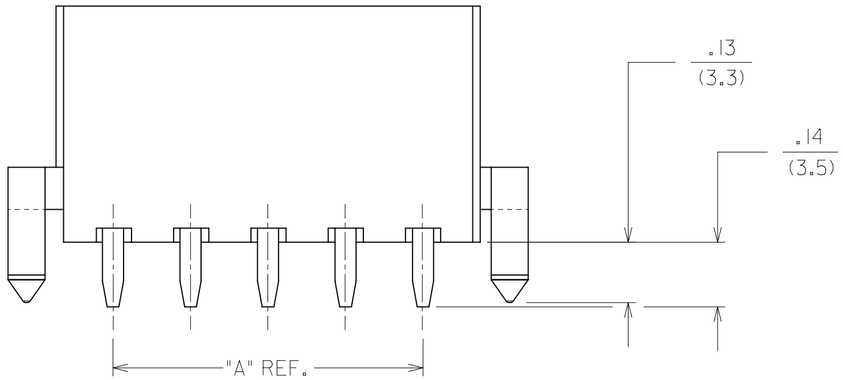


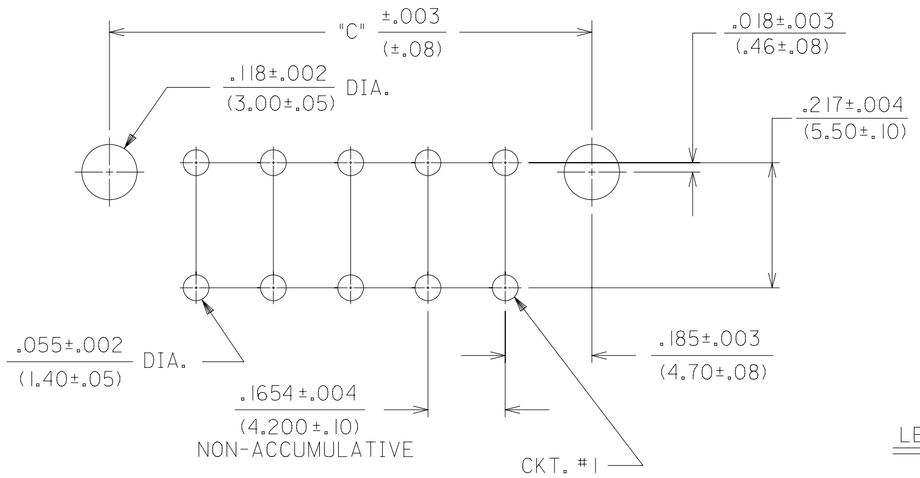


| CIRCUIT SIZE | DIM. "A" | DIM. "B" | DIM. "C" |
|---|---|---|---|
| 2 | — | .21 (5.4) | .370 (9.40) |
| 4 | .17 (4.2) | .38 (9.6) | .535 (13.60) |
| 6 | .33 (8.4) | .54 (13.8) | .701 (17.80) |
| 8 | .50 (12.6) | .71 (18.0) | .866 (22.00) |
| 10 | .66 (16.8) | .87 (22.2) | 1.031 (26.20) |
| 12 | .83 (21.0) | 1.04 (26.4) | 1.197 (30.40) |
| 14 | .99 (25.2) | 1.20 (30.6) | 1.362 (34.60) |
| 16 | 1.16 (29.4) | 1.37 (34.8) | 1.528 (38.80) |
| 18 | 1.32 (33.6) | 1.54 (39.0) | 1.693 (43.00) |
| 20 | 1.49 (37.8) | 1.70 (43.2) | 1.858 (47.20) |
| 22 | 1.65 (42.0) | 1.87 (47.4) | 2.024 (51.40) |
| 24 | 1.82 (46.2) | 2.03 (51.6) | 2.189 (55.60) |

NOTES:

1) HOUSING MATERIAL:

"BLANK" - NYLON, UNFILLED U.L. 94V-2,
COLOR: NATURAL.

210 - NYLON, UNFILLED U.L. 94V-0,
COLOR: NATURAL.

BL - NYLON, UNFILLED U.L. 94V-2,
COLOR: BLACK.

400 - NYLON, UNFILLED U.L. 94V-0,
COLOR: BLACK.

TERMINAL MATERIAL: BRASS

2) TERMINAL PLATING:

"BLANK" - .000035/(.00090) MIN. REFLOWED MATTE TIN OVER
.000020/(.00050) MIN. COPPER. (PREPLATE)
(FINISH IS BRIGHT IN APPEARANCE, THICKNESS AS
APPLIED PRIOR TO REFLOW)

GS - .000030/(.00076) MIN. SELECT GOLD
.000100/(.00254) MIN. SELECT MATTE TIN
OVER .000050/(.00127) MIN. NICKEL OVERALL.

GS2 - .000015/(.00038) MIN. SELECT GOLD AND
.000100/(.00254) MIN. SELECT MATTE TIN
OVER .000050/(.00127) MIN. NICKEL OVERALL.

S - .000100/(.00254) MIN. BRIGHT TIN
OVER .000050/(.00127) MIN. NICKEL OVERALL.

MS - .000100/(.00254) MIN. MATTE TIN
OVER .000050/(.00127) MIN. NICKEL OVERALL.

3) PRODUCT SPECIFICATION: PS-5556-001

4) PACKAGING: SEE CHARTS

5) PART MATES WITH MINI-FIT JR. RECEPTACLE #5557.

6) MOUNTING OPTIONS:

"BLANK" - NO MOUNTING
(SEE SD-5566-002 DWG.)
2 - PEG MOUNT

7. PART CONFORMS TO CLASS "B" REQUIREMENTS OF COSMETIC SPECIFICATION PS-45499-002

8. ANTI-SHINGLING RIB MAY OR MAY NOT APPEAR ON HOUSINGS.

9. CONNECTORS ARE NOT TO BE MATED OR UNMATED WHILE CIRCUITS ARE LIVE.

10. PARTS ARE NOT DESIGNED FOR CURRENT SHARING.

RECOMMENDED HOLE LAYOUT FOR .070/(1.78) MAX. THICK P.C. BOARD

VIEWED FROM COMPONENT SIDE

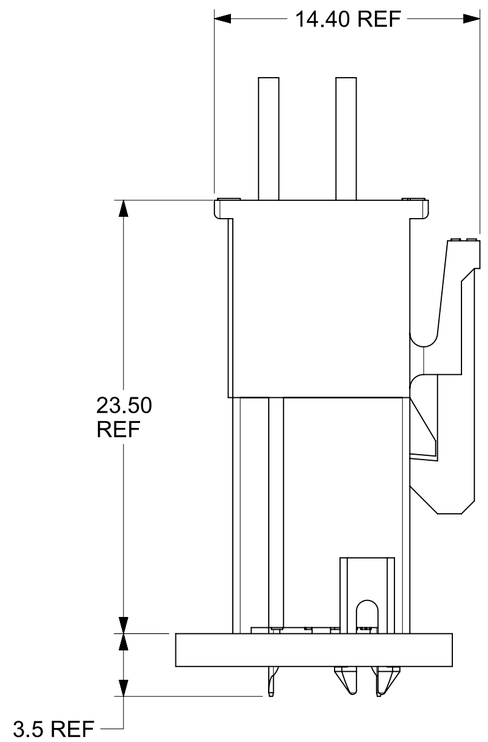


THIS DRAWING REPLACES SDA-5566-N*2*-*

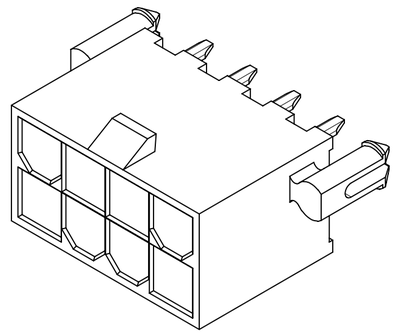

8 CKT SHOWN

LEGEND:

5566 - N * * * - * *

- BASE NUMBER
- CIRCUIT SIZE
- ASSEMBLY TYPE
  - A - W/O DRAIN HOLES
  - B - W/O DRAIN HOLES
  - (B: NOT RECOMMENDED FOR NEW APPLICATION)
- MOUNTING OPTION (SEE NOTE 6)
- PLATING (SEE NOTE 2)
- HOUSING MAT'L (SEE NOTE 1)
- PACKAGING
  - BLANK - TRAY
  - TR - TAPE & REEL

THIS DRAWING CONTAINS INFORMATION THAT IS PROPRIETARY TO MOLEX ELECTRONIC TECHNOLOGIES, LLC AND SHOULD NOT BE USED WITHOUT WRITTEN PERMISSION

| DIMENSION UNITS | SCALE |
|---|---|
| IN/MM | NTS |

GENERAL TOLERANCES (UNLESS SPECIFIED)

| | MM | INCH |
|---|---|---|
| 4 PLACES | ± | ± |
| 3 PLACES | ± | ± 0.0150 |
| 2 PLACES | ± 0.380 | ± 0.020 |
| 1 PLACE | ± 0.50 | ± |
| 0 PLACES | ± | ± |
| ANGULAR TOL | ± 3° | |

DRAFT WHERE APPLICABLE MUST REMAIN WITHIN DIMENSIONS

CURRENT REV DESC: ADD THE VIEW OF MATING HEIGHT

STATUS: Production

| | | |
|---|---|---|
| DRWN: | Xiao Wei Wang | 2026-06-25 |
| CHK'D: | Xiao Wei Wang | 2026-06-29 |
| APPR: | Xue Qing Zhang | 2026-06-29 |

INITIAL REVISION:

| | | |
|---|---|---|
| DRWN: | RJF | 1987/08/19 |
| APPR: | FSMITH | 2012/01/10 |

THIRD ANGLE PROJECTION | DRAWING: C-SIZE | SERIES: 5566

molex

MINIFIT JR VERT HDR ASSY'S W/ PEGS

PRODUCT CUSTOMER DRAWING

| DOCUMENT NUMBER | DOC TYPE | DOC PART | REVISION |
|---|---|---|---|
| 55660021-SD | PSD | 000 | A6 |

| MATERIAL NUMBER | CUSTOMER | SHEET NUMBER |
|---|---|---|
| SEE TABLE | GENERAL MARKET | 1 OF 4 |

FORMAT: Engdesign-TC4b-prod-C
REVISION: B
DATE: 2023/10/23

| PLATING: | 35 M.I. TIN |
|---|---|
| DRAIN HOLES: | WITHOUT DRAIN HOLES |
| MTG. OPTION: | WITH PEGS |
| HOUSING MAT'L: | NYLON 6/6 94V-2 NATURAL |
| PACKAGING: | PK-5566-001 |

| PART NO. | ENG NO. | CKTS |
|---|---|---|
| 39-29-9023 | 5566 -02A2 | 2 |
| 39-29-9043 | 5566 -04A2 | 4 |
| 39-29-9063 | 5566 -06A2 | 6 |
| 39-29-9083 | 5566 -08A2 | 8 |
| 39-29-9103 | 5566 -10A2 | 10 |
| 39-29-9123 | 5566 -12A2 | 12 |
| 39-29-9143 | 5566 -14A2 | 14 |
| 39-29-9163 | 5566 -16A2 | 16 |
| 39-29-9183 | 5566 -18A2 | 18 |
| 39-29-9203 | 5566 -20A2 | 20 |
| 39-29-9223 | 5566 -22A2 | 22 |
| 39-29-9243 | 5566 -24A2 | 24 |
| | - | |
| | - | |

| PLATING: | 35 M.I. TIN |
|---|---|
| DRAIN HOLES: | WITHOUT DRAIN HOLES |
| MTG. OPTION: | WITH PEGS |
| HOUSING MAT'L: | NYLON 6/6 94V-0 NATURAL |
| PACKAGING: | PK-5566-001 |

| PART NO. | ENG NO. | CKTS |
|---|---|---|
| 39-29-9027 | 5566 -02A2-210 | 2 |
| 39-29-9047 | 5566 -04A2-210 | 4 |
| 39-29-9067 | 5566 -06A2-210 | 6 |
| 39-29-9087 | 5566 -08A2-210 | 8 |
| 39-29-9107 | 5566 -10A2-210 | 10 |
| 39-29-9127 | 5566 -12A2-210 | 12 |
| 39-29-9147 | 5566 -14A2-210 | 14 |
| 39-29-9167 | 5566 -16A2-210 | 16 |
| 39-29-9187 | 5566 -18A2-210 | 18 |
| 39-29-9207 | 5566 -20A2-210 | 20 |
| 39-29-9227 | 5566 -22A2-210 | 22 |
| 39-29-9247 | 5566 -24A2-210 | 24 |
| | - | |
| | - | |

| PLATING: | 30 M.I. GOLD |
|---|---|
| DRAIN HOLES: | WITHOUT DRAIN HOLES |
| MTG. OPTION: | WITH PEGS |
| HOUSING MAT'L: | NYLON 6/6 94V-2 NATURAL |
| PACKAGING: | PK-5566-001 |

| PART NO. | ENG NO. | CKTS |
|---|---|---|
| 39-29-9025 | 5566 -02A2GS | 2 |
| 39-29-9045 | 5566 -04A2GS | 4 |
| 39-29-9065 | 5566 -06A2GS | 6 |
| 39-29-9085 | 5566 -08A2GS | 8 |
| 39-29-9105 | 5566 -10A2GS | 10 |
| 39-29-9125 | 5566 -12A2GS | 12 |
| 39-29-9145 | 5566 -14A2GS | 14 |
| 39-29-9165 | 5566 -16A2GS | 16 |
| 39-29-9185 | 5566 -18A2GS | 18 |
| 39-29-9205 | 5566 -20A2GS | 20 |
| 39-29-9225 | 5566 -22A2GS | 22 |
| 39-29-9245 | 5566 -24A2GS | 24 |
| | - | |
| | - | |

| PLATING: | 30 M.I. GOLD |
|---|---|
| DRAIN HOLES: | WITHOUT DRAIN HOLES |
| MTG. OPTION: | WITH PEGS |
| HOUSING MAT'L: | NYLON 6/6 94V-0 NATURAL |
| PACKAGING: | PK-5566-001 |

| PART NO. | ENG NO. | CKTS |
|---|---|---|
| 39-29-9029 | 5566 -02A2GS-210 | 2 |
| 39-29-9049 | 5566 -04A2GS-210 | 4 |
| 39-29-9069 | 5566 -06A2GS-210 | 6 |
| 39-29-9089 | 5566 -08A2GS-210 | 8 |
| 39-29-9109 | 5566 -10A2GS-210 | 10 |
| 39-29-9129 | 5566 -12A2GS-210 | 12 |
| 39-29-9149 | 5566 -14A2GS-210 | 14 |
| 39-29-9169 | 5566 -16A2GS-210 | 16 |
| 39-29-9189 | 5566 -18A2GS-210 | 18 |
| 39-29-9209 | 5566 -20A2GS-210 | 20 |
| 39-29-9229 | 5566 -22A2GS-210 | 22 |
| 39-29-9249 | 5566 -24A2GS-210 | 24 |
| | - | |
| | - | |

| PLATING: | 35 M.I. TIN |
|---|---|
| DRAIN HOLES: | WITHOUT DRAIN HOLES |
| MTG. OPTION: | WITH PEGS |
| HOUSING MAT'L: | NYLON 6/6 94V-2 NATURAL |
| PACKAGING: | PK-5566-001 |

| PART NO. | ENG NO. | CKTS | |
|---|---|---|---|
| | 5566 -02B2 | 2 | * |
| 39-29-9042 | 5566 -04B2 | 4 | * |
| 39-29-9062 | 5566 -06B2 | 6 | * |
| 39-29-9082 | 5566 -08B2 | 8 | * |
| 39-29-9102 | 5566 -10B2 | 10 | * |
| 39-29-9122 | 5566 -12B2 | 12 | * |
| 39-29-9142 | 5566 -14B2 | 14 | * |
| 39-29-9162 | 5566 -16B2 | 16 | * |
| 39-29-9182 | 5566 -18B2 | 18 | * |
| 39-29-9202 | 5566 -20B2 | 20 | * |
| 39-29-9222 | 5566 -22B2 | 22 | * |
| 39-29-9242 | 5566 -24B2 | 24 | * |
| | - | | |
| | - | | |

| PLATING: | 35 M.I. TIN |
|---|---|
| DRAIN HOLES: | WITHOUT DRAIN HOLES |
| MTG. OPTION: | WITH PEGS |
| HOUSING MAT'L: | NYLON 6/6 94V-0 NATURAL |
| PACKAGING: | PK-5566-001 |

| PART NO. | ENG NO. | CKTS | |
|---|---|---|---|
| | 5566 -02B2-210 | 2 | * |
| 39-29-9046 | 5566 -04B2-210 | 4 | * |
| 39-29-9066 | 5566 -06B2-210 | 6 | * |
| 39-29-9086 | 5566 -08B2-210 | 8 | * |
| 39-29-9106 | 5566 -10B2-210 | 10 | * |
| 39-29-9126 | 5566 -12B2-210 | 12 | * |
| 39-29-9146 | 5566 -14B2-210 | 14 | * |
| 39-29-9166 | 5566 -16B2-210 | 16 | * |
| 39-29-9186 | 5566 -18B2-210 | 18 | * |
| 39-29-9206 | 5566 -20B2-210 | 20 | * |
| | 5566 -22B2-210 | 22 | * |
| 39-29-9246 | 5566 -24B2-210 | 24 | * |
| | - | | |
| | - | | |

| PLATING: | 30 M.I. GOLD |
|---|---|
| DRAIN HOLES: | WITHOUT DRAIN HOLES |
| MTG. OPTION: | WITH PEGS |
| HOUSING MAT'L: | NYLON 6/6 94V-2 NATURAL |
| PACKAGING: | PK-5566-001 |

| PART NO. | ENG NO. | CKTS | |
|---|---|---|---|
| | 5566 -02B2GS | 2 | * |
| 39-29-9044 | 5566 -04B2GS | 4 | * |
| 39-29-9064 | 5566 -06B2GS | 6 | * |
| 39-29-9084 | 5566 -08B2GS | 8 | * |
| 39-29-9104 | 5566 -10B2GS | 10 | * |
| 39-29-9124 | 5566 -12B2GS | 12 | * |
| 39-29-9144 | 5566 -14B2GS | 14 | * |
| 39-29-9164 | 5566 -16B2GS | 16 | * |
| 39-29-9184 | 5566 -18B2GS | 18 | * |
| 39-29-9204 | 5566 -20B2GS | 20 | * |
| 39-29-9224 | 5566 -22B2GS | 22 | * |
| 39-29-9244 | 5566 -24B2GS | 24 | * |
| | - | | |
| | - | | |

| PLATING: | 30 M.I. GOLD |
|---|---|
| DRAIN HOLES: | WITHOUT DRAIN HOLES |
| MTG. OPTION: | WITH PEGS |
| HOUSING MAT'L: | NYLON 6/6 94V-0 NATURAL |
| PACKAGING: | PK-5566-001 |

| PART NO. | ENG NO. | CKTS | |
|---|---|---|---|
| | 5566 -02B2GS-210 | 2 | * |
| 39-28-9048 | 5566 -04B2GS-210 | 4 | * |
| 39-28-9068 | 5566 -06B2GS-210 | 6 | * |
| 39-28-9088 | 5566 -08B2GS-210 | 8 | * |
| 39-28-9108 | 5566 -10B2GS-210 | 10 | * |
| 39-28-9128 | 5566 -12B2GS-210 | 12 | * |
| 39-28-9148 | 5566 -14B2GS-210 | 14 | * |
| 39-28-9168 | 5566 -16B2GS-210 | 16 | * |
| 39-28-9188 | 5566 -18B2GS-210 | 18 | * |
| 39-28-9208 | 5566 -20B2GS-210 | 20 | * |
| | 5566 -22B2GS-210 | 22 | * |
| 39-28-9248 | 5566 -24B2GS-210 | 24 | * |
| | - | | |
| | - | | |

PART NUMBERS MARKED IN "*" IN THIS SHEET ARE NOT RECOMMENDED FOR NEW APPLICATION.
ALL WITH DRAIN HOLE VERSION PRODUCTS ARE CHANGED TO WITHOUT DRAIN HOLE VERSION PRODUCTS.

THIS DRAWING CONTAINS INFORMATION THAT IS PROPRIETARY TO MOLEX ELECTRONIC TECHNOLOGIES, LLC AND SHOULD NOT BE USED WITHOUT WRITTEN PERMISSION

| DIMENSION UNITS | SCALE |
|---|---|
| IN/MM | NTS |

GENERAL TOLERANCES (UNLESS SPECIFIED)

| | MM | INCH |
|---|---|---|
| 4 PLACES | ± | ± |
| 3 PLACES | ± | ± 0.0150 |
| 2 PLACES | ± 0.380 | ± 0.020 |
| 1 PLACE | ± 0.50 | ± |
| 0 PLACES | ± | ± |
| ANGULAR TOL | ± 3° | |

DRAFT WHERE APPLICABLE MUST REMAIN WITHIN DIMENSIONS

CURRENT REV DESC: ADD THE VIEW OF MATING HEIGHT

STATUS: Production

DRWN: Xiao Wei Wang 2026-06-25
CHK'D: Xiao Wei Wang 2026-06-29
APPR: Xue Qing Zhang 2026-06-29

INITIAL REVISION:
DRWN: RJF 1987/08/19
APPR: FSMITH 2012/01/10

molex

MINIFIT JR VERT HDR ASSY'S W/ PEGS

PRODUCT CUSTOMER DRAWING

| DOCUMENT NUMBER | DOC TYPE | DOC PART | REVISION |
|---|---|---|---|
| 55660021-SD | PSD | 000 | A6 |

| THIRD ANGLE PROJECTION | DRAWING | SERIES | MATERIAL NUMBER | CUSTOMER | SHEET NUMBER |
|---|---|---|---|---|---|
| | C-SIZE | 5566 | SEE TABLE | GENERAL MARKET | 2 OF 4 |

FORMAT: EngAlign-TC4b+prod-C
REVISION: B
DATE: 2023/10/23

| PLATING: | 100 M.I. BRIGHT TIN |
|---|---|
| DRAIN HOLES: | WITHOUT DRAIN HOLES |
| MTG. OPTION: | WITH PEGS |
| HOUSING MAT'L: | NYLON 6/6 94V-2 NATURAL |
| PACKAGING: | PK-5566-001 |

| PART NO. | ENG NO. | CKTS |
|---|---|---|
| 39-30-6025 | 5566 -02A2S | 2 |
| 39-30-6045 | 5566 -04A2S | 4 |
| 39-30-6065 | 5566 -06A2S | 6 |
| 39-30-6085 | 5566 -08A2S | 8 |
| 39-30-6105 | 5566 -10A2S | 10 |
| 39-30-6125 | 5566 -12A2S | 12 |
| 39-30-6145 | 5566 -14A2S | 14 |
| 39-30-6165 | 5566 -16A2S | 16 |
| 39-30-6185 | 5566 -18A2S | 18 |
| 39-30-6205 | 5566 -20A2S | 20 |
| 39-30-6225 | 5566 -22A2S | 22 |
| 39-30-6245 | 5566 -24A2S | 24 |
| | - | |
| | - | |

| PLATING: | 100 M.I. BRIGHT TIN |
|---|---|
| DRAIN HOLES: | WITHOUT DRAIN HOLES |
| MTG. OPTION: | WITH PEGS |
| HOUSING MAT'L: | NYLON 6/6 94V-0 NATURAL |
| PACKAGING: | PK-5566-001 |

| PART NO. | ENG NO. | CKTS |
|---|---|---|
| 39-30-6026 | 5566 -02A2S-210 | 2 |
| 39-30-6046 | 5566 -04A2S-210 | 4 |
| 39-30-6066 | 5566 -06A2S-210 | 6 |
| 39-30-6086 | 5566 -08A2S-210 | 8 |
| 39-30-6106 | 5566 -10A2S-210 | 10 |
| 39-30-6126 | 5566 -12A2S-210 | 12 |
| 39-30-6146 | 5566 -14A2S-210 | 14 |
| 39-30-6166 | 5566 -16A2S-210 | 16 |
| 39-30-6186 | 5566 -18A2S-210 | 18 |
| 39-30-6206 | 5566 -20A2S-210 | 20 |
| 39-30-6226 | 5566 -22A2S-210 | 22 |
| 39-30-6246 | 5566 -24A2S-210 | 24 |
| | - | |
| | - | |

| PLATING: | 15 M.I. SELECT GOLD |
|---|---|
| DRAIN HOLES: | WITHOUT DRAIN HOLES |
| MTG. OPTION: | WITH PEGS |
| HOUSING MAT'L: | NYLON 6/6 94V-2 NATURAL |
| PACKAGING: | PK-5566-001 |

| PART NO. | ENG NO. | CKTS |
|---|---|---|
| 39-30-0026 | 5566 -02A2GS2 | 2 |
| 39-30-0046 | 5566 -04A2GS2 | 4 |
| 39-30-0066 | 5566 -06A2GS2 | 6 |
| 39-30-0086 | 5566 -08A2GS2 | 8 |
| 39-30-0106 | 5566 -10A2GS2 | 10 |
| 39-30-0126 | 5566 -12A2GS2 | 12 |
| 39-30-0146 | 5566 -14A2GS2 | 14 |
| 39-30-0166 | 5566 -16A2GS2 | 16 |
| 39-30-0186 | 5566 -18A2GS2 | 18 |
| 39-30-0206 | 5566 -20A2GS2 | 20 |
| 39-30-0226 | 5566 -22A2GS2 | 22 |
| 39-30-0246 | 5566 -24A2GS2 | 24 |
| | - | |
| | - | |

| PLATING: | 15 M.I. SELECT GOLD |
|---|---|
| DRAIN HOLES: | WITHOUT DRAIN HOLES |
| MTG. OPTION: | WITH PEGS |
| HOUSING MAT'L: | NYLON 6/6 94V-0 NATURAL |
| PACKAGING: | PK-5566-001 |

| PART NO. | ENG NO. | CKTS |
|---|---|---|
| 39-30-0027 | 5566 -02A2GS2-210 | 2 |
| 39-30-0047 | 5566 -04A2GS2-210 | 4 |
| 39-30-0067 | 5566 -06A2GS2-210 | 6 |
| 39-30-0087 | 5566 -08A2GS2-210 | 8 |
| 39-30-0107 | 5566 -10A2GS2-210 | 10 |
| 39-30-0127 | 5566 -12A2GS2-210 | 12 |
| 39-30-0147 | 5566 -14A2GS2-210 | 14 |
| 39-30-0167 | 5566 -16A2GS2-210 | 16 |
| 39-30-0187 | 5566 -18A2GS2-210 | 18 |
| 39-30-0207 | 5566 -20A2GS2-210 | 20 |
| 39-30-0227 | 5566 -22A2GS2-210 | 22 |
| 39-30-0247 | 5566 -24A2GS2-210 | 24 |
| | - | |
| | - | |

| PLATING: | 100 M.I. BRIGHT TIN |
|---|---|
| DRAIN HOLES: | WITHOUT DRAIN HOLES |
| MTG. OPTION: | WITH PEGS |
| HOUSING MAT'L: | NYLON 6/6 94V-2 NATURAL |
| PACKAGING: | PK-5566-001 |

| PART NO. | ENG NO. | CKTS | |
|---|---|---|---|
| | 5566 -02B2S | 2 | * |
| 39-30-6047 | 5566 -04B2S | 4 | * |
| 39-30-6067 | 5566 -06B2S | 6 | * |
| 39-30-6087 | 5566 -08B2S | 8 | * |
| 39-30-6107 | 5566 -10B2S | 10 | * |
| 39-30-6127 | 5566 -12B2S | 12 | * |
| 39-30-6147 | 5566 -14B2S | 14 | * |
| 39-30-6167 | 5566 -16B2S | 16 | * |
| 39-30-6187 | 5566 -18B2S | 18 | * |
| 39-30-6207 | 5566 -20B2S | 20 | * |
| 39-30-6227 | 5566 -22B2S | 22 | * |
| 39-30-6247 | 5566 -24B2S | 24 | * |
| | - | | |
| | - | | |

| PLATING: | 100 M.I. BRIGHT TIN |
|---|---|
| DRAIN HOLES: | WITHOUT DRAIN HOLES |
| MTG. OPTION: | WITH PEGS |
| HOUSING MAT'L: | NYLON 6/6 94V-0 NATURAL |
| PACKAGING: | PK-5566-001 |

| PART NO. | ENG NO. | CKTS | |
|---|---|---|---|
| | 5566 -02B2S-210 | 2 | * |
| 39-30-6048 | 5566 -04B2S-210 | 4 | * |
| 39-30-6068 | 5566 -06B2S-210 | 6 | * |
| 39-30-6088 | 5566 -08B2S-210 | 8 | * |
| 39-30-6108 | 5566 -10B2S-210 | 10 | * |
| | 5566 -12B2S-210 | 12 | obselete |
| 39-30-6148 | 5566 -14B2S-210 | 14 | * |
| 39-30-6168 | 5566 -16B2S-210 | 16 | * |
| 39-30-6188 | 5566 -18B2S-210 | 18 | * |
| 39-30-6208 | 5566 -20B2S-210 | 20 | * |
| 39-30-6228 | 5566 -22B2S-210 | 22 | * |
| 39-30-6248 | 5566 -24B2S-210 | 24 | * |
| | - | | |
| | - | | |

| PLATING: | 100 M.I. MATTE TIN |
|---|---|
| DRAIN HOLES: | WITHOUT DRAIN HOLES |
| MTG. OPTION: | WITH PEGS |
| HOUSING MAT'L: | NYLON 6/6 94V-2 NATURAL |
| PACKAGING: | PK-5566-001 |

| PART NO. | ENG NO. | CKTS | |
|---|---|---|---|
| 46999-0612 | 5566-02A2MS | 2 | * |
| 46999-0501 | 5566-04A2MS | 4 | * |
| 50-34-8559 | 5566-06A2MS | 6 | * |
| 46999-0613 | 5566-08A2MS | 8 | * |
| 46999-0614 | 5566-10A2MS | 10 | * |
| 46999-0615 | 5566-12A2MS | 12 | * |
| 46999-0616 | 5566-14A2MS | 14 | * |
| 46999-0617 | 5566-16A2MS | 16 | * |
| 46999-0618 | 5566-18A2MS | 18 | * |
| 50-34-8560 | 5566-20A2MS | 20 | * |
| 46999-0619 | 5566-22A2MS | 22 | * |
| 46999-0620 | 5566-24A2MS | 24 | * |

| PLATING: | 100 M.I. MATTE TIN |
|---|---|
| DRAIN HOLES: | WITHOUT DRAIN HOLES |
| MTG. OPTION | WITH PEGS |
| HOUSING MAT'L: | NYLON 6/6 94V-0 NATURAL |
| PACKAGING: | PK-5566-001 |

| PART NO. | ENG NO. | CKTS | |
|---|---|---|---|
| 46999-0621 | 5566-02A2MS-210 | 2 | * |
| 46999-0502 | 5566-04A2MS-210 | 4 | * |
| 50-34-8562 | 5566-06A2MS-210 | 6 | * |
| 50-34-8563 | 5566-08A2MS-210 | 8 | * |
| 46999-0622 | 5566-10A2MS-210 | 10 | * |
| 46999-0623 | 5566-12A2MS-210 | 12 | * |
| 50-34-8561 | 5566-14A2MS-210 | 14 | * |
| 46999-0624 | 5566-16A2MS-210 | 16 | * |
| 50-34-8564 | 5566-18A2MS-210 | 18 | * |
| 50-34-2357 | 5566-20A2MS-210 | 20 | * |
| 46999-0625 | 5566-22A2MS-210 | 22 | * |
| 50-34-8566 | 5566-24A2MS-210 | 24 | * |

PART NUMBERS MARKED IN "*" IN THIS SHEET ARE NOT RECOMMENDED FOR NEW APPLICATION.
ALL WITH DRAIN HOLE VERSION PRODUCTS ARE CHANGED TO WITHOUT DRAIN HOLE VERSION PRODUCTS.

THIS DRAWING CONTAINS INFORMATION THAT IS PROPRIETARY TO MOLEX ELECTRONIC TECHNOLOGIES, LLC AND SHOULD NOT BE USED WITHOUT WRITTEN PERMISSION

| DIMENSION UNITS | SCALE |
|---|---|
| IN/MM | NTS |

GENERAL TOLERANCES (UNLESS SPECIFIED)

| | MM | INCH |
|---|---|---|
| 4 PLACES | ± | ± |
| 3 PLACES | ± | ± 0.0150 |
| 2 PLACES | ± 0.380 | ± 0.020 |
| 1 PLACE | ± 0.50 | ± |
| 0 PLACES | ± | ± |
| ANGULAR TOL | ± 3° | |

DRAFT WHERE APPLICABLE MUST REMAIN WITHIN DIMENSIONS

CURRENT REV DESC: ADD THE VIEW OF MATING HEIGHT

STATUS: Production
DRWN: Xiao Wei Wang 2026-06-25
CHK'D: Xiao Wei Wang 2026-06-29
APPR: Xue Qing Zhang 2026-06-29

INITIAL REVISION:
DRWN: RJF 1987/08/19
APPR: FSMITH 2012/01/10

THIRD ANGLE PROJECTION | DRAWING: C-SIZE | SERIES: 5566

molex

MINIFIT JR VERT HDR ASSY'S W/ PEGS

PRODUCT CUSTOMER DRAWING

| DOCUMENT NUMBER | DOC TYPE | DOC PART | REVISION |
|---|---|---|---|
| 55660021-SD | PSD | 000 | A6 |

| MATERIAL NUMBER | CUSTOMER | SHEET NUMBER |
|---|---|---|
| SEE TABLE | GENERAL MARKET | 3 OF 4 |

FORMAT: EngAsgn-TC4b+prod-C
REVISION: B
DATE: 2023/10/23

| | | | | | | | |
|---|---|---|---|---|---|---|---|
| PLATING: | 35 M.I. TIN | PLATING: | 35 M.I. TIN | PLATING: | | PLATING: | |
| DRAIN HOLES: | WITHOUT DRAIN HOLES | DRAIN HOLES: | WITHOUT DRAIN HOLES | DRAIN HOLES: | | DRAIN HOLES: | |
| MTG. OPTION: | WITH PEGS | MTG. OPTION: | WITH PEGS | MTG. OPTION: | | MTG. OPTION: | |
| HOUSING MAT'L: | NYLON 6/6 94V-2 (BLACK) | HOUSING MAT'L: | NYLON 6/6 94V-0 NATURAL | HOUSING MAT'L: | | HOUSING MAT'L: | |
| PACKAGING: | PK-5566-001 | PACKAGING: | 55660000-RPK | PACKAGING: | | PACKAGING: | |

| PART NO. | ENG NO. | CKTS | PART NO. | ENG NO. | CKTS | PART NO. | ENG NO. | CKTS | PART NO. | ENG NO. | CKTS |
|---|---|---|---|---|---|---|---|---|---|---|---|
| | - | | 39-29-9300 | 5566-02A2-210TR | 2 | | | | | | |
| 39-31-9048 | 5566 -04A2-BL | 4 | | - | | | | | | | |
| | - | | | - | | | | | | | |
| 39-31-9088 | 5566 -08A2-BL | 8 | | - | | | | | | | |
| | - | | | - | | | | | | | |
| | - | | | - | | | | | | | |
| | - | | | - | | | | | | | |
| | - | | | - | | | | | | | |
| | - | | | - | | | | | | | |
| | - | | | - | | | | | | | |
| | - | | | - | | | | | | | |
| | - | | | - | | | | | | | |
| | - | | | - | | | | | | | |
| | - | | | - | | | | | | | |

| | | | | | | | |
|---|---|---|---|---|---|---|---|
| PLATING: | | PLATING: | 100 M.I. MATTE TIN | PLATING: | | PLATING: | |
| DRAIN HOLES: | | DRAIN HOLES: | WITHOUT DRAIN HOLES | DRAIN HOLES: | | DRAIN HOLES: | |
| MTG. OPTION: | | MTG. OPTION: | WITH PEGS | MTG. OPTION: | | MTG. OPTION: | |
| HOUSING MAT'L: | | HOUSING MAT'L: | NYLON 6/6 94V-0 BLACK | HOUSING MAT'L: | | HOUSING MAT'L: | |
| PACKAGING: | | PACKAGING: | PK-5566-001 | PACKAGING: | | PACKAGING: | |

| PART NO. | ENG NO. | CKTS | PART NO. | ENG NO. | CKTS | PART NO. | ENG NO. | CKTS | PART NO. | ENG NO. | CKTS |
|---|---|---|---|---|---|---|---|---|---|---|---|
| | | | 46999-0335 | 5566-02A2MS-400 | 2 | | | | | | |
| | | | 46999-0336 | 5566-04A2MS-400 | 4 | | | | | | |
| | | | 46999-0337 | 5566-06A2MS-400 | 6 | | | | | | |
| | | | 46999-0338 | 5566-08A2MS-400 | 8 | | | | | | |
| | | | 46999-0339 | 5566-10A2MS-400 | 10 | | | | | | |
| | | | 46999-0340 | 5566-12A2MS-400 | 12 | | | | | | |
| | | | 46999-0341 | 5566-14A2MS-400 | 14 | | | | | | |
| | | | 46999-0342 | 5566-16A2MS-400 | 16 | | | | | | |
| | | | 46999-0343 | 5566-18A2MS-400 | 18 | | | | | | |
| | | | 46999-0344 | 5566-20A2MS-400 | 20 | | | | | | |
| | | | 46999-0345 | 5566-22A2MS-400 | 22 | | | | | | |
| | | | 46999-0346 | 5566-24A2MS-400 | 24 | | | | | | |
| | | | | - | | | | | | | |
| | | | | - | | | | | | | |

THIS DRAWING CONTAINS INFORMATION THAT IS PROPRIETARY TO MOLEX ELECTRONIC TECHNOLOGIES, LLC AND SHOULD NOT BE USED WITHOUT WRITTEN PERMISSION

| DIMENSION UNITS | SCALE |
|---|---|
| IN/MM | NTS |

GENERAL TOLERANCES (UNLESS SPECIFIED)

| | MM | INCH |
|---|---|---|
| 4 PLACES | ± | ± |
| 3 PLACES | ± | ± 0.0150 |
| 2 PLACES | ± 0.380 | ± 0.020 |
| 1 PLACE | ± 0.50 | ± |
| 0 PLACES | ± | ± |
| ANGULAR TOL | ± 3° | |

DRAFT WHERE APPLICABLE MUST REMAIN WITHIN DIMENSIONS

CURRENT REV DESC: ADD THE VIEW OF MATING HEIGHT

STATUS: Production
DRWN: Xiao Wei Wang 2026-06-25
CHK'D: Xiao Wei Wang 2026-06-29
APPR: Xue Qing Zhang 2026-06-29

INITIAL REVISION:
DRWN: RJF 1987/08/19
APPR: FSMITH 2012/01/10

THIRD ANGLE PROJECTION | DRAWING: C-SIZE | SERIES: 5566

molex

MINIFIT JR VERT HDR ASSY'S W/ PEGS

PRODUCT CUSTOMER DRAWING

| DOCUMENT NUMBER | DOC TYPE | DOC PART | REVISION |
|---|---|---|---|
| 55660021-SD | PSD | 000 | A6 |

| MATERIAL NUMBER | CUSTOMER | SHEET NUMBER |
|---|---|---|
| SEE TABLE | GENERAL MARKET | 4 OF 4 |

FORMAT: Engdega-TC-tb-prod-C
REVISION: B
DATE: 2023/10/23