RoHS/ REACH COMPLIANT

Halogen Free

Shielded Power Inductors LPS8045B

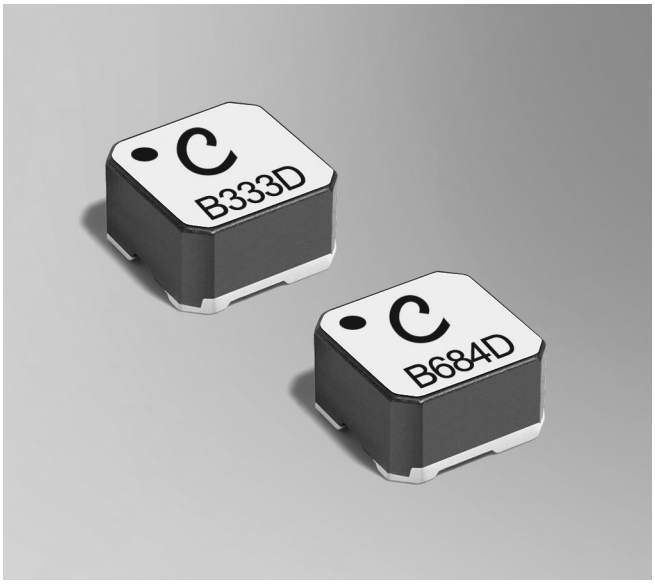

- Inductance values from 6.8 to 1000 µH
- Low DCR; excellent current handling

Core material Ferrite
Weight 0.88 – 1.1 g
Environmental RoHS compliant, halogen free
Terminations RoHS compliant matte tin over nickel over silver. Other terminations available at additional cost.
Operating voltage 400 V max
Ambient temperature –40°C to +85°C with (40°C rise) Irms current.
Maximum part temperature +125°C (ambient + temp rise). Derating.
Storage temperature Component: –40°C to +125°C. Tape and reel packaging: –40°C to +80°C
Resistance to soldering heat Max three 40 second reflows at +260°C, parts cooled to room temperature between cycles
Moisture Sensitivity Level (MSL) 1 (unlimited floor life at <30°C / 85% relative humidity)
Packaging 250/7″ reel; 1000/13″ reel; Plastic tape: 16 mm wide, 0.28 mm thick, 12 mm pocket spacing, 4.83 mm pocket depth
Recommended pick and place nozzle OD: 8 mm; ID: 4 mm
PCB washing Tested to MIL-STD-202 Method 215 plus an additional aqueous wash. See Doc787_PCB_Washing.pdf.

Part number[1]	Inductance[2] ± 20% (µH)	DCR (Ohms) typ	DCR (Ohms) max	SRF typ (MHz)	Isat (A)[3] 10% drop	Isat (A)[3] 20% drop	Isat (A)[3] 30% drop	Irms (A)[4] 20°C rise	Irms (A)[4] 40°C rise
LPS8045B-682MR_	6.8	0.059	0.075	63	3.6	3.9	4.0	1.80	2.40
LPS8045B-103MR_	10	0.073	0.090	49	2.8	3.2	3.3	1.55	2.15
LPS8045B-153MR_	15	0.092	0.110	23	2.5	2.7	2.7	1.35	1.85
LPS8045B-223MR_	22	0.102	0.130	21	2.0	2.3	2.4	1.25	1.75
LPS8045B-333MR_	33	0.121	0.145	12	1.8	2.0	2.1	1.20	1.60
LPS8045B-473MR_	47	0.153	0.179	10	1.6	1.7	1.8	1.10	1.50
LPS8045B-683MR_	68	0.193	0.223	8.7	1.2	1.3	1.4	0.95	1.35
LPS8045B-104MR_	100	0.297	0.342	6.5	1.0	1.1	1.1	0.78	1.10
LPS8045B-154MR_	150	0.379	0.442	5.0	0.88	0.93	0.95	0.70	0.95
LPS8045B-224MR_	220	0.564	0.662	4.3	0.70	0.74	0.77	0.60	0.82
LPS8045B-334MR_	330	0.834	0.950	3.0	0.52	0.58	0.61	0.48	0.65
LPS8045B-474MR_	470	1.28	1.45	2.5	0.43	0.48	0.50	0.39	0.53
LPS8045B-684MR_	680	1.88	2.23	2.2	0.33	0.39	0.43	0.32	0.44
LPS8045B-105MR_	1000	2.92	3.22	1.3	0.31	0.34	0.36	0.23	0.32

1. When ordering, please specify **termination** and **packaging** codes:

LPS8045B-105MRC

Termination: **R =** RoHS compliant matte tin over nickelover silver.
Special order, added cost:
Q = RoHS tin-silver-copper (95.5/4/0.5) or **P** = non-RoHS tin-lead (63/37).

Packaging: **C** = 7″ machine-ready reel. EIA-481 embossed plastic tape (250 parts per full reel). Quantities less than full reel available: in tape (not machine ready) or with leader and trailer ($25 charge).
D = 13″ machine-ready reel. EIA-481 embossed plastic tape. Factory order only, not stocked (1000 parts per full reel).
B = Less than full reel. In an effort to simplify our part numbering system, Coilcraft is eliminating the need for multiple packaging codes. When ordering, simply change the last letter of your part number from B to C.

2. Inductance at 100 kHz, 0.1 Vrms, 0 Adc.
3. DC current at 25°C that causes the specified inductance drop from its value without current. Click for temperature derating information.
4. Current that causes the specified temperature rise from 25°C ambient. This information is for reference only and does not represent absolute maximum ratings. Click for temperature derating information.
5. Electrical specifications at 25°C.

Refer to Doc 362 “Soldering Surface Mount Components” before soldering.

Coilcraft®
www.coilcraft.com

US +1-847-639-6400 sales@coilcraft.com
UK +44-1236-730595 sales@coilcraft-europe.com
Taiwan +886-2-2264 3646 sales@coilcraft.com.tw
China +86-21-6218 8074 sales@coilcraft.com.cn
Singapore + 65-6484 8412 sales@coilcraft.com.sg

Document 968-1 Revised 10/08/26

© Coilcraft Inc. 2026
This product may not be used in medical or high risk applications without prior Coilcraft approval. Specification subject to change without notice. Please check web site for latest information.

LPS8045B Shielded Power Inductors

L vs Current

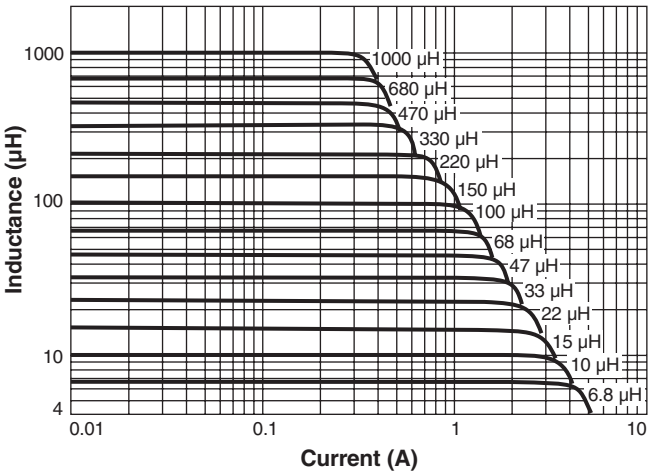

Typical L vs Frequency

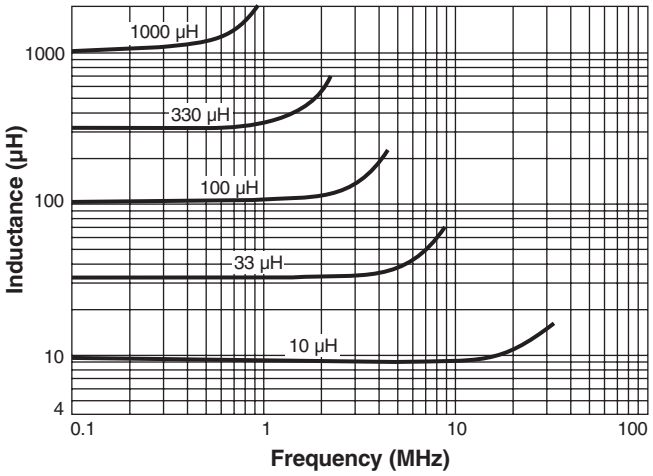

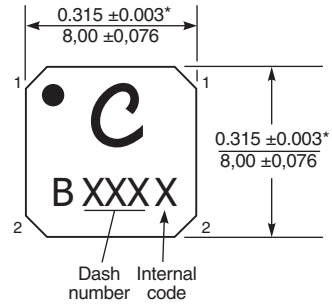

* Dimensions are of the case not including the termination. For maximum overall dimensions including the termination, add 0.005 in / 0,13 mm.
For optional tin-lead and tin-silver-copper terminations, dimensions are for the mounted part. Dimensions before mounting can be an additional 0.005 inch / 0,13 mm).

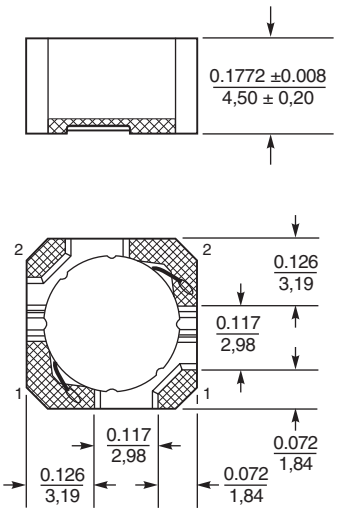

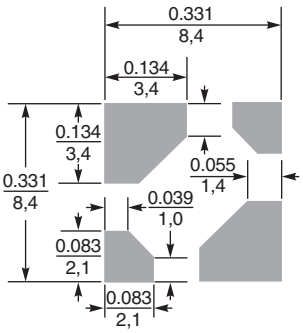

Recommended Land Pattern

Dimensions are in inches / mm

Coilcraft®
www.coilcraft.com

US +1-847-639-6400 sales@coilcraft.com
UK +44-1236-730595 sales@coilcraft-europe.com
Taiwan +886-2-2264 3646 sales@coilcraft.com.tw
China +86-21-6218 8074 sales@coilcraft.com.cn
Singapore + 65-6484 8412 sales@coilcraft.com.sg

Document 968-2 Revised 10/08/26

© Coilcraft Inc. 2026
This product may not be used in medical or high risk applications without prior Coilcraft approval
Specification subject to change without notice
Please check web site for latest information