462 Series

250V/350V VAC/VDC Time Lag Fuse



Description

The 462 series Nano2® Surface Mount Fuse has time-lag current characteristics with 250V and 350V interrupting ratings. It complies with IEC 60127-4 Universal Modular Fuse-Links (UMF).

Features & Benefits

- Heat resistant plastic housing, UL 94 V-0
- Designed for line or low voltage applications
- Low voltage drop
- Internationally approved
- High pulse resistance
- Lead-free – compatible with lead-free solders and higher temperature profiles
- Available in ratings of 0.5A to 5A
- Halogen-free and RoHS compliant.

Applications

- Lighting ballast
- AC/DC adaptor primary protection
- Transformerless AC/DC converter circuit
- High DC voltage power distribution system

Additional Information

Resources | Accessories | Samples

Electrical Characteristics for Series

% of Amp Rating	Opening Time
125%	1 hour, Minimum
200%	2 minutes, Maximum
1000%	10 milliseconds, Minimum 100 milliseconds, Maximum

Agency Approvals

Agency	Agency File/Certificate Number	Ampere Range
c US	E67006	0.5A - 5A
VDE	40022235	1A, 1.6A, 2A, 3.15A, 4A
PSE	NBK250416-JP1021	1A - 1.6A
	NBK010721-JP1021	2A - 5A
CQC	CQC14012115883	1.6A
EAC	RU C-DE.HB26.B01385/21	0.5A - 5A
UL	E242325	0.5A - 5A
CE	NA	0.5A - 5A
UKCA	NA	0.5A - 5A

Electrical Specifications by Item

Ampere Rating (A)	Amp Code	Max Voltage Rating (V)[5]	Interrupting Rating	Nominal Cold Resistance (Ohms)[1]	Nominal Melting I²t (A²sec)	Nom Voltage Drop (mV)	Nom Power Dissipation (mW)	Agency Approvals[3]							
								c US	CE	UKCA	VDE	UL	CQC	EAC	PSE
0.5	0500	250	100A @ 350VAC/VDC[4] 150A @ 250VAC/VDC	0.227	0.43	160	200	x	x	x	-	x	-	x	-
0.63	0630			0.157	0.8	160	200	x	x	x	-	x	-	x	-
0.8	0800			0.13	1.4	160	250	x	x	x	-	x	-	x	-
1.0	1100			0.0867	2.7	140	250	x	x	x	x	x	-	x	x
1.25	1125			0.0602	5.2	130	250	x	x	x	-	x	-	x	x
1.6	1160			0.0443	9.7	130	280	x	x	x	x	x	x	x	x
2.0	1200			0.0335	5.44	120	300	x	x	x	x	x	-	x	x
2.5	1250			0.0278	8.0	120	450	x	x	x	-	x	-	x	x
3.15	1315			0.0204	14.0	110	600	x	x	x	x	x	-	x	x
4.0	1400			0.0158	21.0	110	800	x	x	x	x	x	-	x	x
5.0	1500		150A @ 250VAC/VDC	0.0124	40.0	110	1000	x	x	x	-	x	-	x	x

Notes:

1. Cold resistance measured at less than 10% of rated current at 23°C
2. I²t values are measured at 8ms opening time
3. Agency Approval Table Key: X = Approved or Certified, P = Pending
4. UL Recognition - IR at 100A @ 350 VAC/VDC
5. Rated at 350VAC/VDC per UL Recognition under UL248 (up to 4A only). Rated at 250VAC/VDC per VDE under IEC standard 60127-4.

If you have special electrical characteristic needs, please contact Littelfuse to discuss application specific options.

© 2023 Littelfuse, Inc.
Specifications are subject to change without notice.

Revised: GD. 11/24/23

462 Series
250V/350V VAC/VDC Time Lag Fuse

Temperature Re-rating Curve

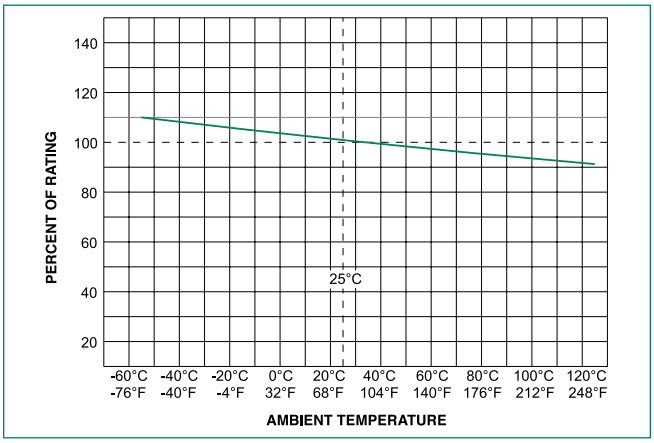

Note:
1. Rerating depicted in this curve is in addition to the standard derating of 25% for continuous operation.

Average Time Current Curves

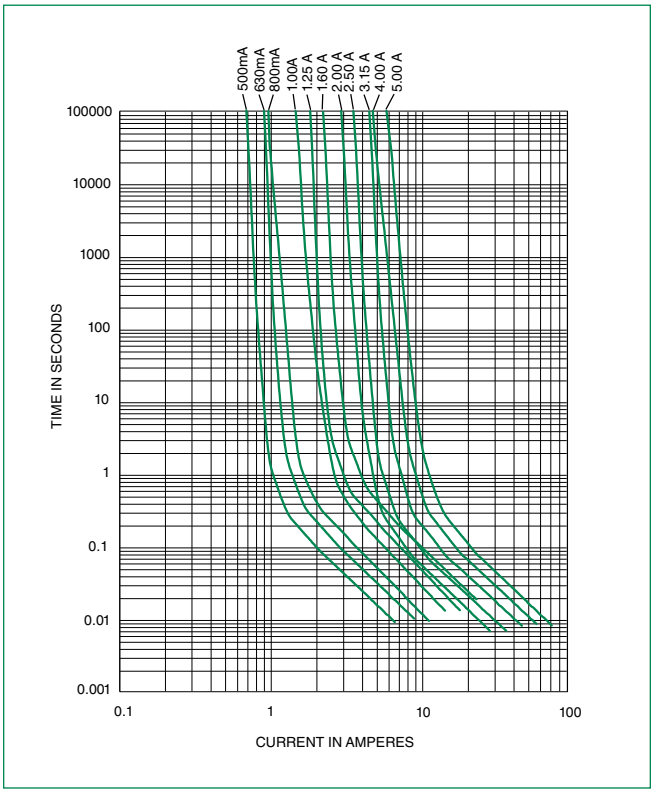

Soldering Parameters

Reflow Condition		Pb – free assembly
Pre Heat	**- Temperature Min ($T_{s(min)}$)**	150°C
	- Temperature Max ($T_{s(max)}$)	200°C
	- Time (Min to Max) (t_s)	60 – 180 seconds
Average Ramp-up Rate (Liquidus Temp (T_L) to peak)		5°C/second max.
$T_{S(max)}$ to T_L - Ramp-up Rate		5°C/second max.
Reflow	**- Temperature (T_L) (Liquidus)**	217°C
	- Temperature (t_L)	60 – 150 seconds
Peak Temperature (T_P)		$250^{+0/-5}$ °C
Time within 5°C of actual peak Temperature (t_p)		20 – 40 seconds
Ramp-down Rate		5°C/second max.
Time 25°C to peak Temperature (T_P)		8 minutes max.

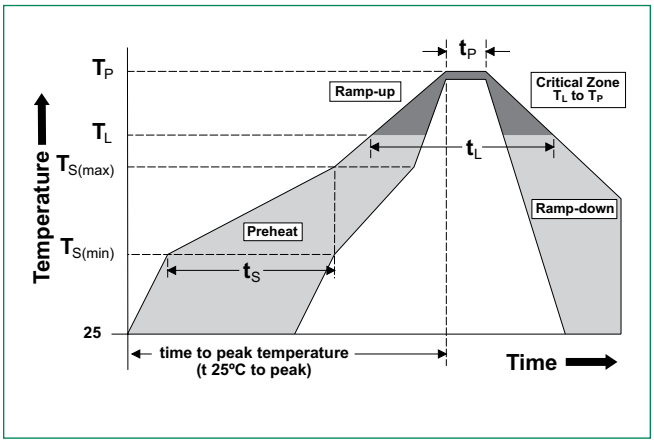

© 2023 Littelfuse, Inc.
Specifications are subject to change without notice.
Revised: GD. 11/24/23

462 Series
250V/350V VAC/VDC Time Lag Fuse

Product Characteristics

Materials	**Body:** Plastic UL 94 V-0 **Cap:** Tin-plated brass
Product Marking	**Body:** Brand Logo, "T" for Time-Lag, Current Rating, L Voltage Rating, UMF logo
Solderability	IEC 60068-2-58
Reistance to Soldering Heat	IEC 60068-2-58

Operating Temperature	–40°C to +85°C with proper derating
Climatic Category	IEC 60068-1, -2-1, -2-2, -2-78 (–40°C to +85°C / 21 days)
Vibration	IEC 60068-6 (24 cycles of 15 mins each, 1-60 Hz at 0.75mm amplitute, 60-2000 Hz at 10g acceleration)
Moisture Sensitivity Level	J-STD-020, Level 1

Dimensions

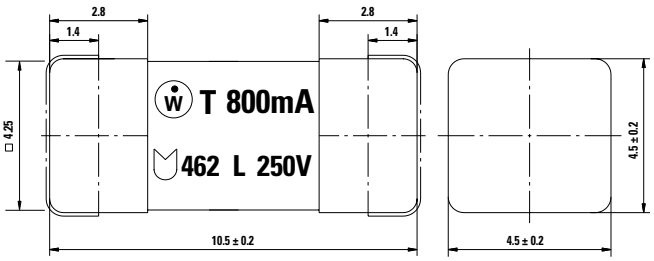

Recommended Pad Layout

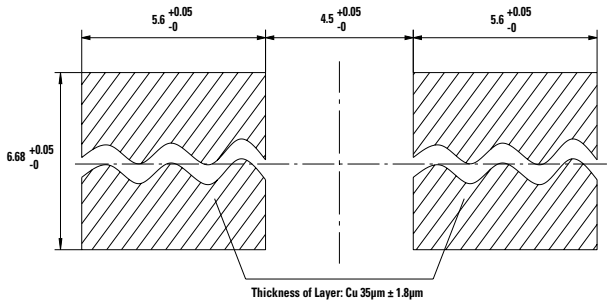

Part Numbering System

462 0 500 0 0 0 0

Series

AMP Code
0: < 1A
1: > 1A

AMP Rating
100: 1A
125: 1.25A
160: 1.6A
200: 2A
250: 2.5A
315: 3.15A
400: 4A
500: 500mA, 5A
630: 630mA
800: 800mA

Kind
0: Standard

Variant
0: Standard

Packaging Code
0: Tape and Reel, 1500 pcs

Reserve Character
0: Default

Examples:
0.5 amp (500mA) product is
462 **0 500** 0 0 0 0

5.0 amp product is
462 **1 500** 0 0 0 0

Please refer to Amp Code column of the Electrical Specifications table on the first page of this document.

Packaging

Packaging Option	Packaging Specification	Quantity	Quantity & Packaging Code
16mm Tape and Reel	IEC 60286, part 3	1500	0

Disclaimer Notice - Littelfuse products are not designed for, and shall not be used for, any purpose (including, without limitation, automotive, military, aerospace, medical, life-saving, life-sustaining or nuclear facility applications, devices intended for surgical implant into the body, or any other application in which the failure or lack of desired operation of the product may result in personal injury, death, or property damage) other than those expressly set forth in applicable Littelfuse product documentation. Warranties granted by Littelfuse shall be deemed void for products used for any purpose not expressly set forth in applicable Littelfuse documentation. Littelfuse shall not be liable for any claims or damages arising out of products used in applications not expressly intended by Littelfuse as set forth in applicable Littelfuse documentation. The sale and use of Littelfuse products is subject to Littelfuse Terms and Conditions of Sale, unless otherwise agreed by Littelfuse. Information furnished is believed to be accurate and reliable. However, users should independently evaluate the suitability of and test each product selected for their own applications. Littelfuse products are not designed for, and may not be used in, all applications. Read complete Disclaimer Notice at www.littelfuse.com/disclaimer-electronics.

© 2023 Littelfuse, Inc.
Specifications are subject to change without notice.
Revised: GD. 11/24/23