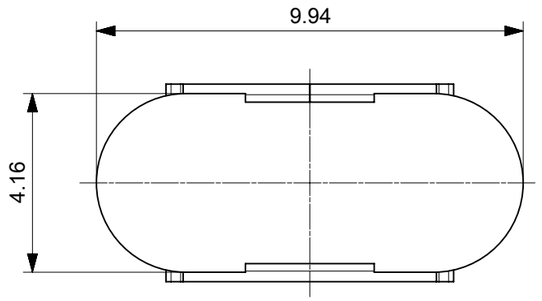

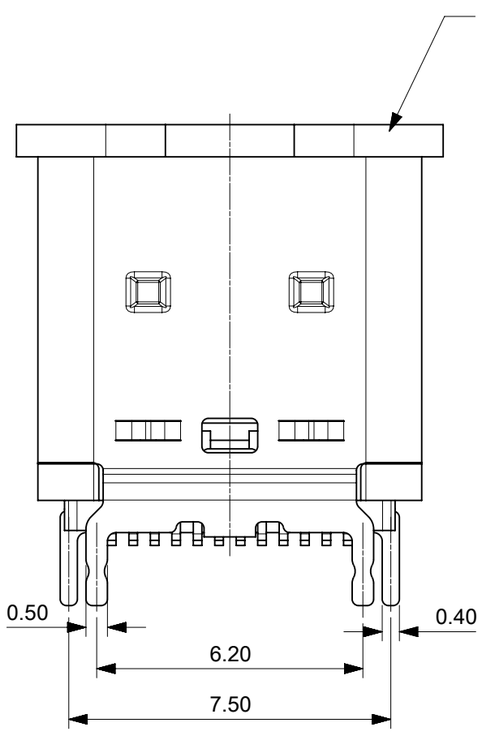

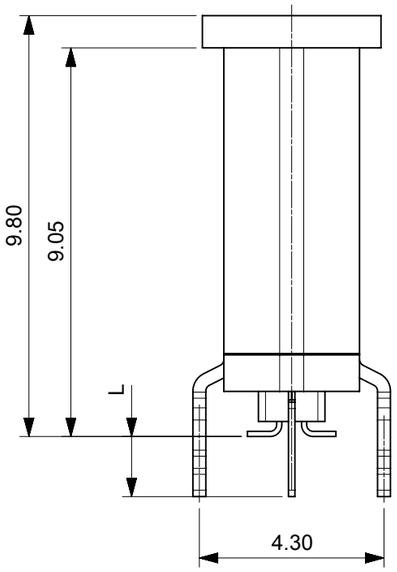

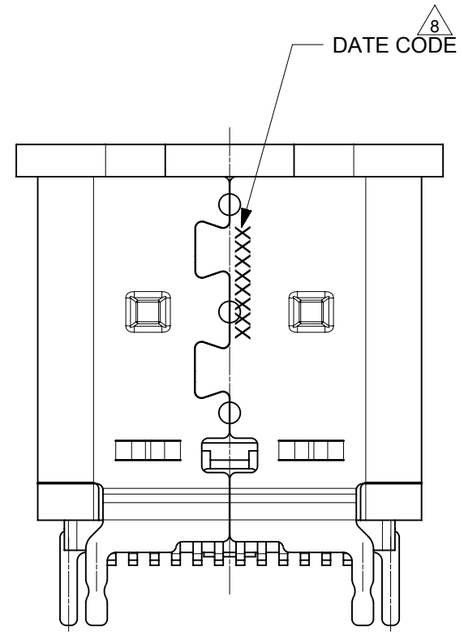

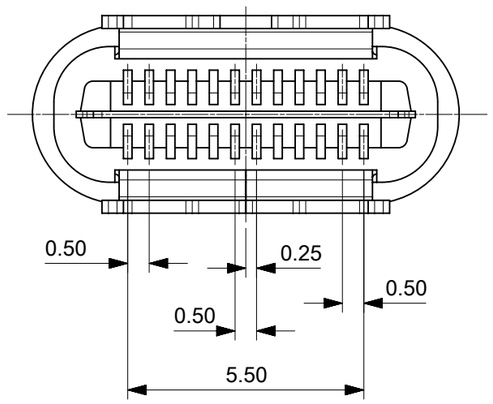

PART NO.	L	PACKAGE SPEC
2047110001	1.4	2047118888
2047110101	2.5	2047118889
2047110005	1.4	2047118890

THIS DRAWING CONTAINS INFORMATION THAT IS PROPRIETARY TO MOLEX ELECTRONIC TECHNOLOGIES, LLC AND SHOULD NOT BE USED WITHOUT WRITTEN PERMISSION

DIMENSION UNITS	SCALE
mm	7:1

GENERAL TOLERANCES (UNLESS SPECIFIED)

ANGULAR TOL	± 3.0 °
4 PLACES	±
3 PLACES	±
2 PLACES	± 0.2
1 PLACE	± 0.2
0 PLACES	±

DRAFT WHERE APPLICABLE MUST REMAIN WITHIN DIMENSIONS

CURRENT REV DESC: ADD PN OF 2047110005.

EC NO: 864686
DRWN: FYANG05 2026/08/13
CHK'D: RLI09 2026/09/07
APPR: RLI09 2026/09/07

INITIAL REVISION:
DRWN: RZHANG 2017/04/20
APPR: AYIN 2017/12/05

molex

VERTICAL USB TYPE C

PRODUCT CUSTOMER DRAWING

DOCUMENT NUMBER	DOC TYPE	DOC PART	REVISION
2047110001	PSD	000	B1

THIRD ANGLE PROJECTION	DRAWING	SERIES	MATERIAL NUMBER	CUSTOMER	SHEET NUMBER
	A3-SIZE	204711	SEE TABLE	GENERAL	1 OF 3

DOCUMENT STATUS	P1	RELEASE DATE	2026/09/07 01:55:28

FORMAT: master-tb-prod-A3
REVISION: J1
DATE: 2021/05/01

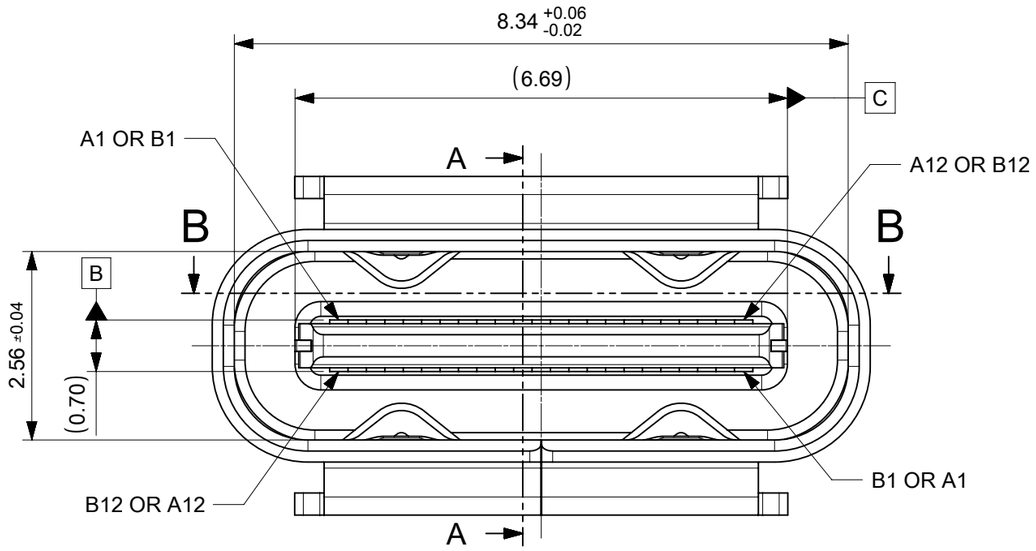

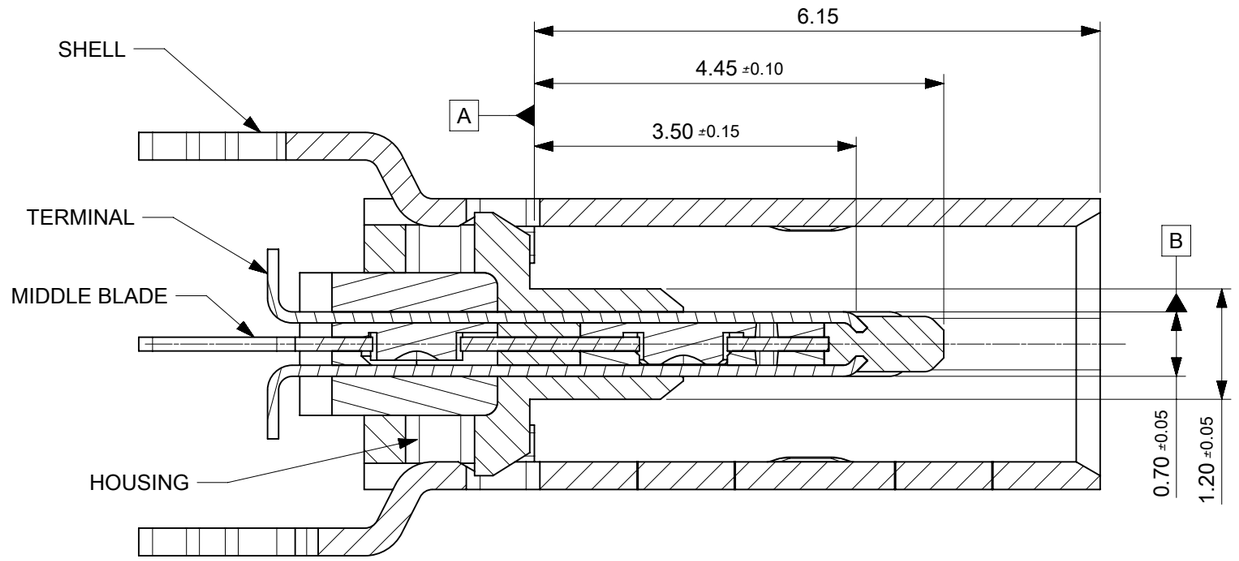

SECTION A-A

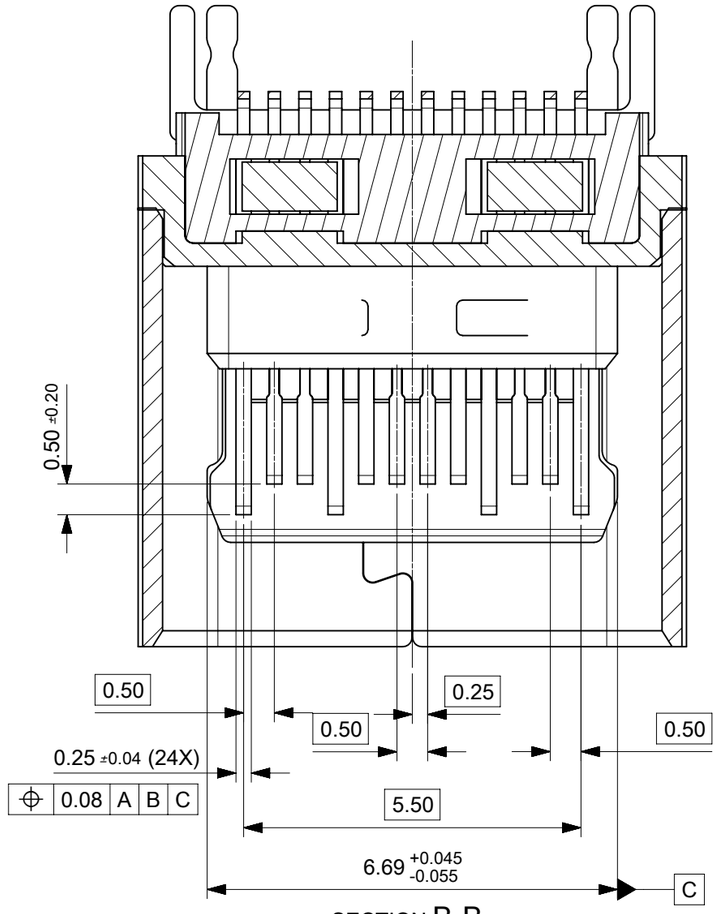

SECTION B-B

PIN ASSIGNMENT											
A1	A2	A3	A4	A5	A6	A7	A8	A9	A10	A11	A12
GND	TX1+	TX1-	Vbus	CC1	D+	D-	SBU1	Vbus	RX2-	RX2+	GND
GND	RX1+	RX1-	Vbus	SBU2	D-	D+	CC2	Vbus	TX2-	TX2+	GND
B12	B11	B10	B9	B8	B7	B6	B5	B4	B3	B2	B1

THIS DRAWING CONTAINS INFORMATION THAT IS PROPRIETARY TO MOLEX ELECTRONIC TECHNOLOGIES, LLC AND SHOULD NOT BE USED WITHOUT WRITTEN PERMISSION

DIMENSION UNITS	SCALE
mm	10:1

GENERAL TOLERANCES (UNLESS SPECIFIED)

ANGULAR TOL	± 3.0 °
4 PLACES	±
3 PLACES	±
2 PLACES	± 0.2
1 PLACE	± 0.2
0 PLACES	±

DRAFT WHERE APPLICABLE MUST REMAIN WITHIN DIMENSIONS

CURRENT REV DESC: ADD PN OF 2047110005.

EC NO: 864686
DRWN: FYANG05 2026/08/13
CHK'D: RLI09 2026/09/07
APPR: RLI09 2026/09/07

INITIAL REVISION:
DRWN: RZHANG 2017/04/20
APPR: AYIN 2017/12/05

THIRD ANGLE PROJECTION | DRAWING: A3-SIZE | SERIES: 204711 | MATERIAL NUMBER: SEE SHEET 1 | CUSTOMER: GENERAL | SHEET NUMBER: 2 OF 3

molex

VERTICAL USB TYPE C

PRODUCT CUSTOMER DRAWING

DOCUMENT NUMBER	DOC TYPE	DOC PART	REVISION
2047110001	PSD	000	B1

DOCUMENT STATUS	P1	RELEASE DATE	2026/09/07 01:55:28

FORMAT: master-tb-prod-A3
REVISION: J1
DATE: 2021/05/01

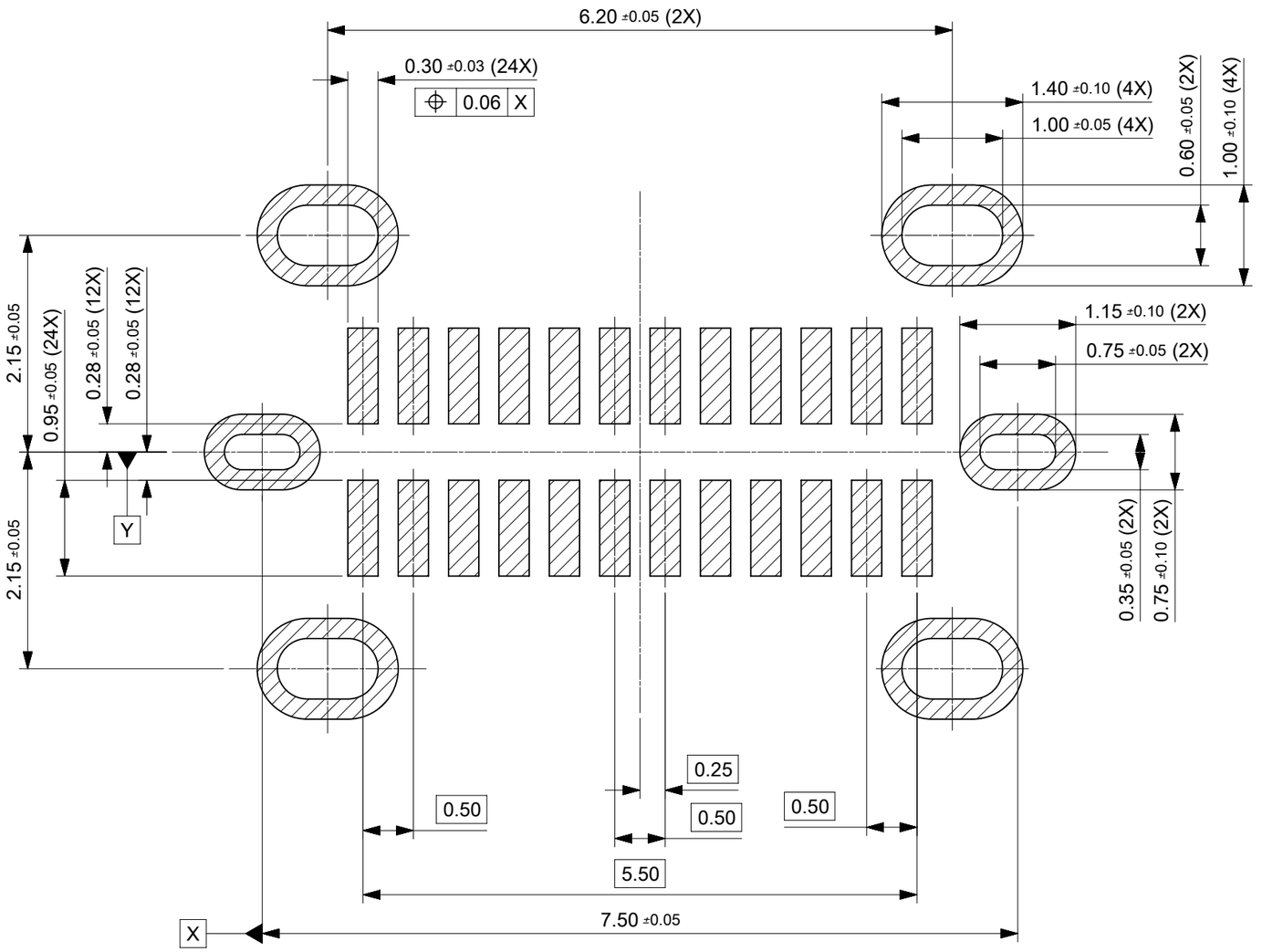

RECOMMENDED PCB LAYOUT

NOTES:

1. MATERIAL,
   HOUSING: HIGN TEMPERATURE THERMAL PLASTIC ,
   30% GLASS FILLED, BLACK, UL94V-0.
   TERMINAL: COPPER ALLOY
   SHELL: STAINLESS STEEL
   MIDDLE BLADE: STAINLESS STEEL
2. PLATING:
   TERMINAL: CONTACT AREA: 0.76 MICROMETER MIN. GOLD PLATING
   SOLDER TAIL: 0.05 MICROMETER MIN. GOLD PLATING
   UNDER PLATING: 2.0 MICROMETER MIN. NICKEL PLATING OVERALL
   SHELL: 1.25 MICRON MIN. SOLDERABLE NICKEL PLATING OVERALL
   MIDDLE BLADE: 1.25 MICRON MIN. SOLDERABLE NICKEL PLATING OVERALL
3. PRODUCT SPEC REFER TO PS-105448-001
4. PACKAGE SPEC：SEE TABLE IN SHEET1.
5. COPLANARITY OF SMT PINS SOLDER TAIL IS 0.08 MAX. BEFORE REFLOW
   AND 0.10 MAX. AFTER REFLOW
6. T/H SOLDER TAIL POSITION BE CONTROLED BY GAUGE
7. PRODUCT COMPLANT TO ROHS DIERTIVE 2011/65/EU
   AND ELV DIRECTIVE 2000/53/EC
8. DATE CODE XX XX XX XX
   - HOUR
   - DATE
   - MONTH
   - YEAR

THIS DRAWING CONTAINS INFORMATION THAT IS PROPRIETARY TO MOLEX ELECTRONIC TECHNOLOGIES, LLC AND SHOULD NOT BE USED WITHOUT WRITTEN PERMISSION

DIMENSION UNITS	mm
SCALE	15:1
GENERAL TOLERANCES (UNLESS SPECIFIED)	
ANGULAR TOL	± 3.0 °
4 PLACES	±
3 PLACES	±
2 PLACES	± 0.2
1 PLACE	± 0.2
0 PLACES	±
DRAFT WHERE APPLICABLE MUST REMAIN WITHIN DIMENSIONS	

CURRENT REV DESC: ADD PN OF 2047110005.

EC NO: 864686
DRWN: FYANG05 2026/08/13
CHK'D: RLI09 2026/09/07
APPR: RLI09 2026/09/07

INITIAL REVISION:
DRWN: RZHANG 2017/04/20
APPR: AYIN 2017/12/05

molex

VERTICAL USB TYPE C

PRODUCT CUSTOMER DRAWING

DOCUMENT NUMBER	DOC TYPE	DOC PART	REVISION
2047110001	PSD	000	B1

THIRD ANGLE PROJECTION	DRAWING	SERIES	MATERIAL NUMBER	CUSTOMER	SHEET NUMBER
	A3-SIZE	204711	SEE SHEET 1	GENERAL	3 OF 3

DOCUMENT STATUS	P1	RELEASE DATE	2026/09/07 01:55:28

FORMAT: master-tb-prod-A3
REVISION: J1
DATE: 2021/05/01