MATERIALS AND FINISHES

BODY BRASS
PLATED SEE TABLE

CENTER CONTACT BRASS
PLATED GOLD

INSULATOR TEFLON

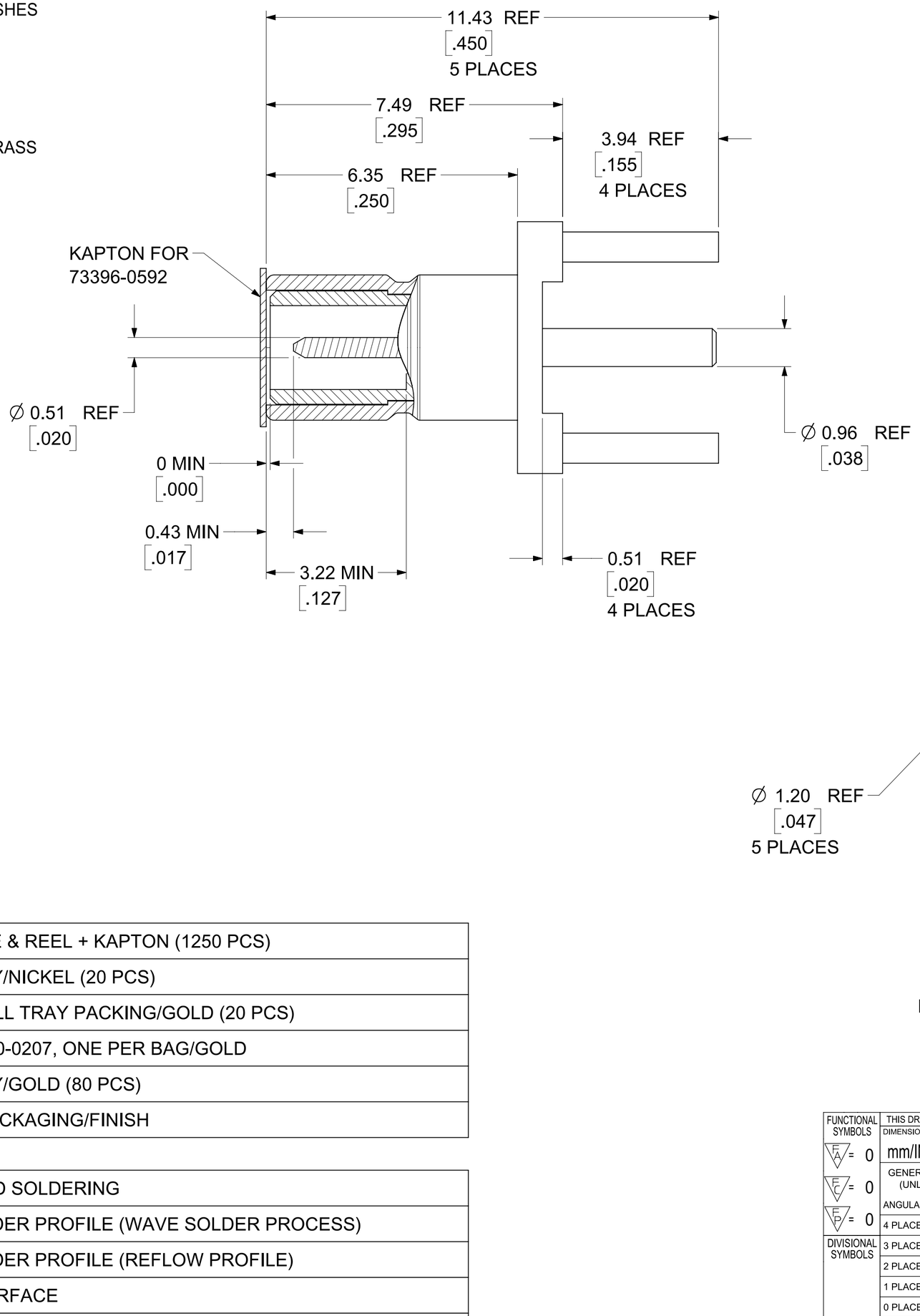

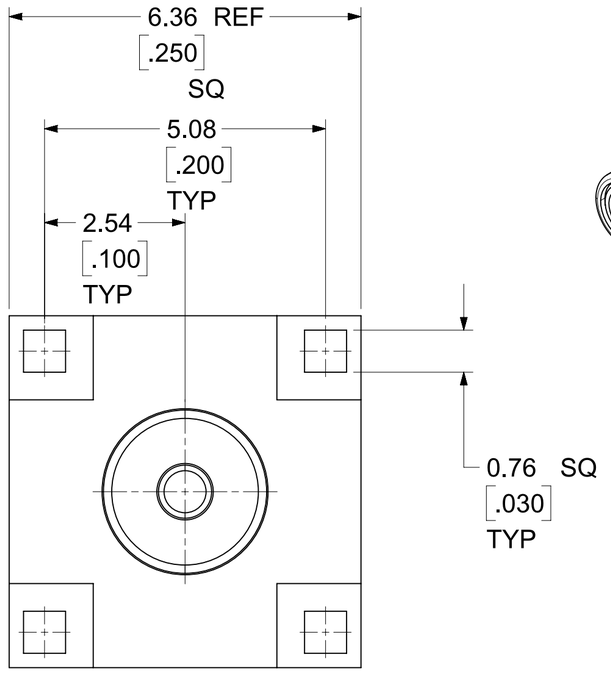

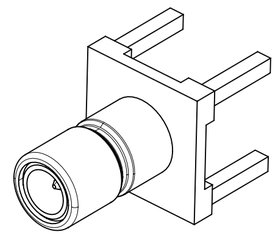

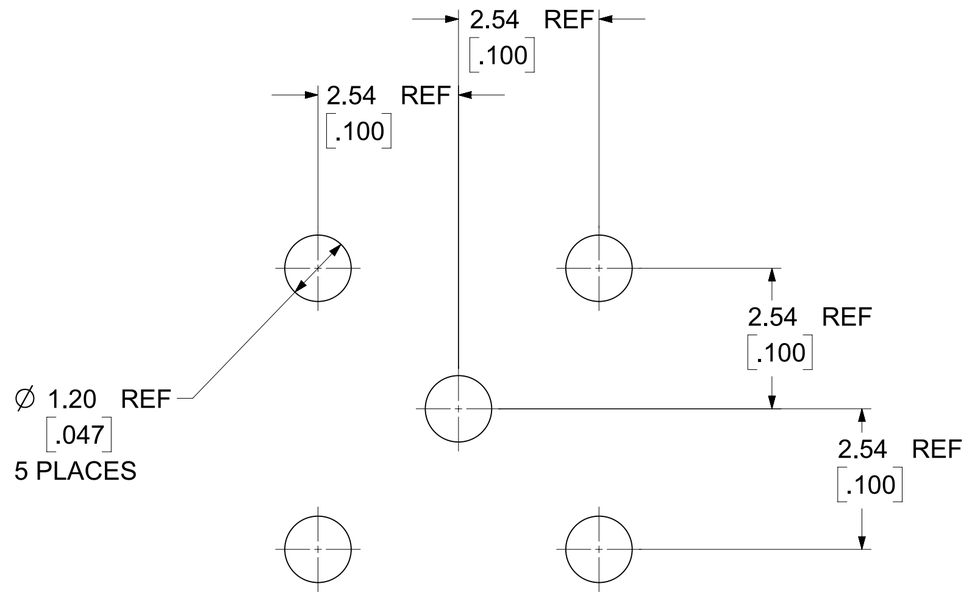

RECOMMENDED PCB MOUNTING HOLE

73396-0592	TAPE & REEL + KAPTON (1250 PCS)
73396-0591	TRAY/NICKEL (20 PCS)
73396-0590	SMALL TRAY PACKING/GOLD (20 PCS)
73404-2300	73100-0207, ONE PER BAG/GOLD
73100-0207	TRAY/GOLD (80 PCS)
PART NO.	PACKAGING/FINISH

PS-89675-3740	HAND SOLDERING
PS-89675-368	SOLDER PROFILE (WAVE SOLDER PROCESS)
PS-89675-365	SOLDER PROFILE (REFLOW PROFILE)
PS-73598-0099	INTERFACE
SPECIFICATION	DESCRIPTION

THIS DRAWING CONTAINS INFORMATION THAT IS PROPRIETARY TO MOLEX ELECTRONIC TECHNOLOGIES, LLC AND SHOULD NOT BE USED WITHOUT WRITTEN PERMISSION

FUNCTIONAL SYMBOLS
FA = 0
FC = 0
FD = 0

DIVISIONAL SYMBOLS

DIMENSION UNITS: mm/INCH
SCALE: NTS

GENERAL TOLERANCES (UNLESS SPECIFIED)
ANGULAR TOL ± 0.5°
4 PLACES ±
3 PLACES ±
2 PLACES ±
1 PLACE ±
0 PLACES ±

DRAFT WHERE APPLICABLE MUST REMAIN WITHIN DIMENSIONS

CURRENT REV DESC: ADDED PS-89675-3740 ON DRAWING PER EWR-16426-F

STATUS: Production
DRWN: Evita Lin 2025-05-19
CHK'D: Kerrie Chen 2025-06-04
APPR: Darry Cheng 2025-06-05

THIRD ANGLE PROJECTION
DRAWING: C-SIZE
SERIES: 73100

molex

SMB JACK, VERTICAL PCB
50 OHMS SMB-JR/PCB

PRODUCT CUSTOMER DRAWING

DOCUMENT NUMBER	DOC TYPE	DOC PART	REVISION
SD-73100-0207	PSD	001	B8

MATERIAL NUMBER	CUSTOMER	SHEET NUMBER
SEE TABLE	GENERAL MARKET	1 OF 4

FORMAT TC-dvprod-C
REVISION: B
DATE: 2022/08/01

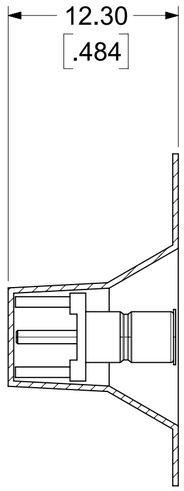

Section 1-1

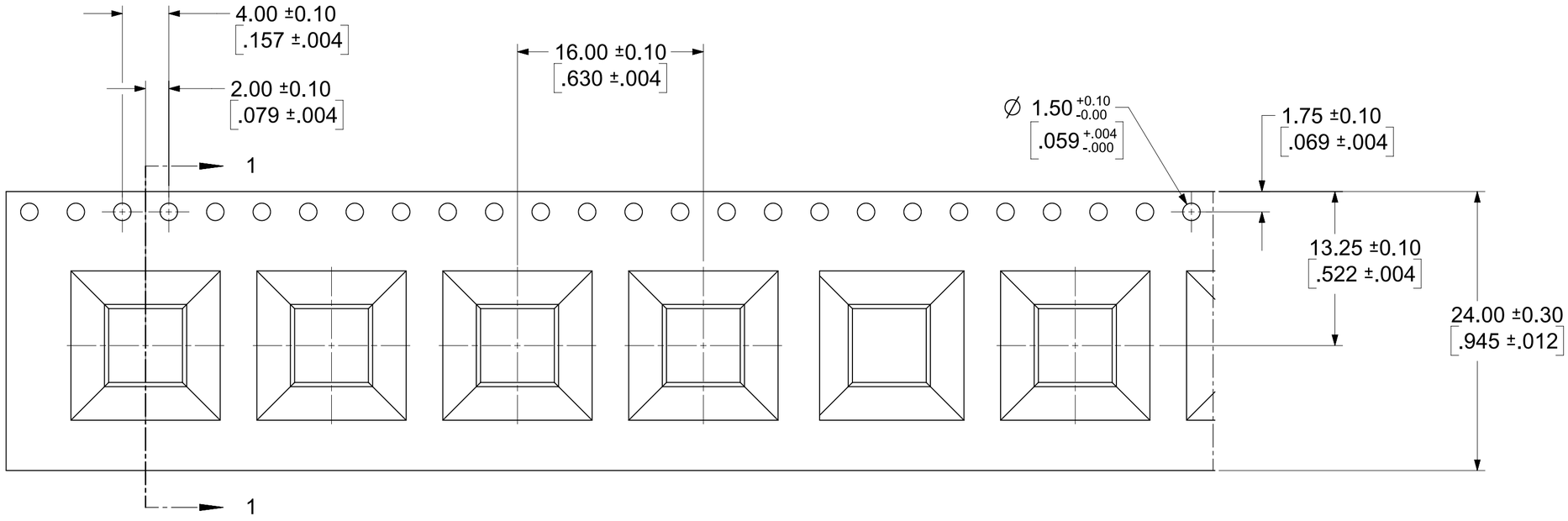

THIS DRAWING CONTAINS INFORMATION THAT IS PROPRIETARY TO MOLEX ELECTRONIC TECHNOLOGIES, LLC AND SHOULD NOT BE USED WITHOUT WRITTEN PERMISSION

FUNCTIONAL SYMBOLS	DIMENSION UNITS: mm/INCH	SCALE: NTS	CURRENT REV DESC: ADDED PS-89675-3740 ON DRAWING PER EWR-16426-F
FA = 0	GENERAL TOLERANCES (UNLESS SPECIFIED)		
FC = 0	ANGULAR TOL ± 0.5°		
FD = 0	4 PLACES ±		
DIVISIONAL SYMBOLS	3 PLACES ±		STATUS: Production
	2 PLACES ±		DRWN: Evita Lin 2025-05-19
	1 PLACE ±		CHK'D: Kerrie Chen 2025-06-04
	0 PLACES ±		APPR: Darry Cheng 2025-06-05
	DRAFT WHERE APPLICABLE MUST REMAIN WITHIN DIMENSIONS	THIRD ANGLE PROJECTION	DRAWING: C-SIZE / SERIES: 73100

molex

SMB JACK, VERTICAL PCB
50 OHMS SMB-JR/PCB

PRODUCT CUSTOMER DRAWING

DOCUMENT NUMBER	DOC TYPE	DOC PART	REVISION
SD-73100-0207	PSD	001	B8

MATERIAL NUMBER	CUSTOMER	SHEET NUMBER
SEE TABLE	GENERAL MARKET	2 OF 4

FORMAT TC-dvprod-C
REVISION: B
DATE: 2022/08/01

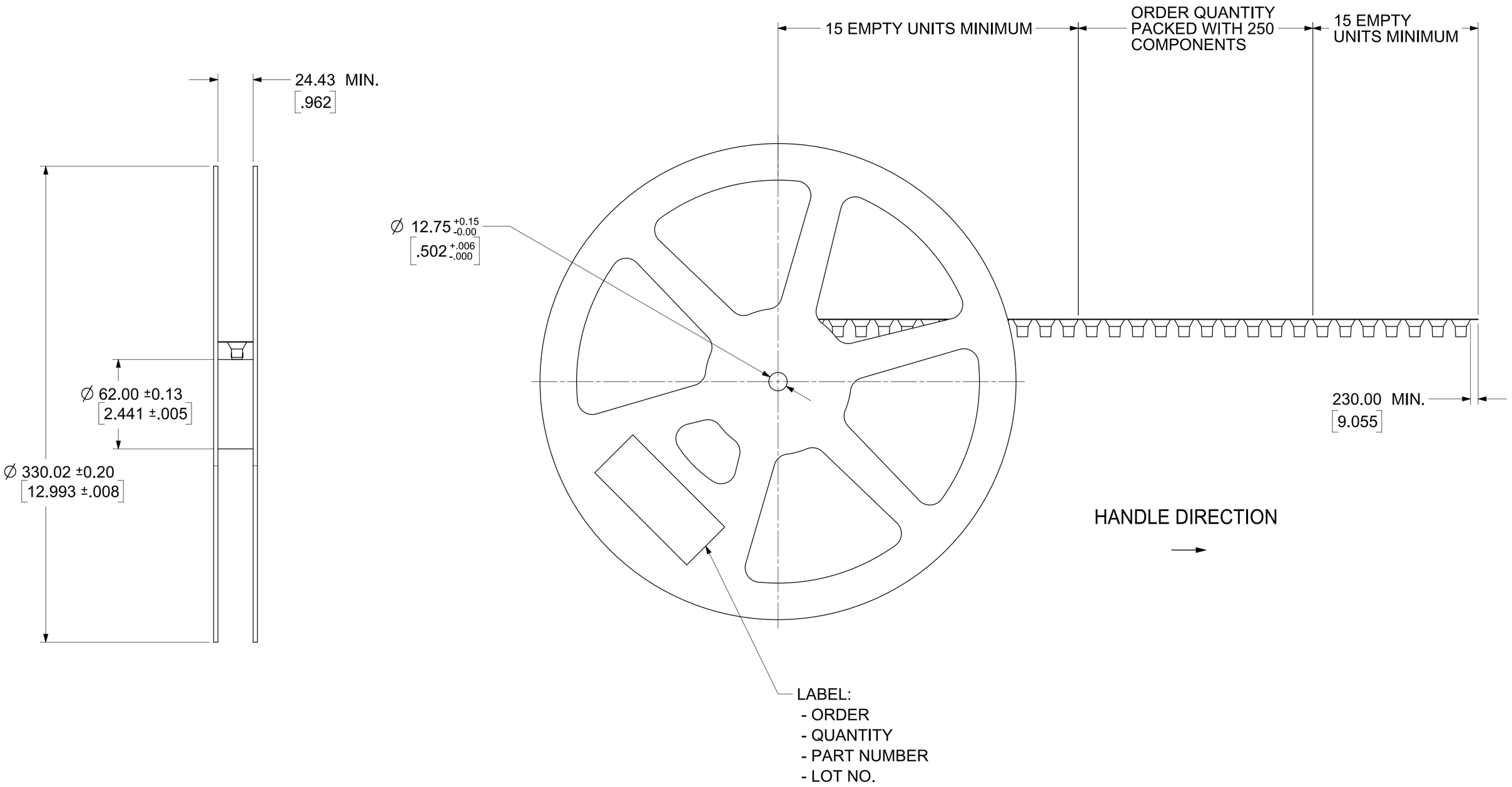

THIS DRAWING CONTAINS INFORMATION THAT IS PROPRIETARY TO MOLEX ELECTRONIC TECHNOLOGIES, LLC AND SHOULD NOT BE USED WITHOUT WRITTEN PERMISSION

FUNCTIONAL SYMBOLS
FA = 0
FC = 0
FP = 0
DIVISIONAL SYMBOLS

DIMENSION UNITS	SCALE
mm/INCH	NTS

GENERAL TOLERANCES (UNLESS SPECIFIED)

ANGULAR TOL	± 0.5°
4 PLACES	±
3 PLACES	±
2 PLACES	±
1 PLACE	±
0 PLACES	±

DRAFT WHERE APPLICABLE MUST REMAIN WITHIN DIMENSIONS

CURRENT REV DESC: ADDED PS-89675-3740 ON DRAWING PER EWR-16426-F

STATUS: Production
DRWN: Evita Lin 2025-05-19
CHK'D: Kerrie Chen 2025-06-04
APPR: Darry Cheng 2025-06-05

THIRD ANGLE PROJECTION

molex

SMB JACK, VERTICAL PCB
50 OHMS SMB-JR/PCB

PRODUCT CUSTOMER DRAWING

DRAWING	SERIES
C-SIZE	73100

DOCUMENT NUMBER	DOC TYPE	DOC PART	REVISION
SD-73100-0207	PSD	001	B8

MATERIAL NUMBER	CUSTOMER	SHEET NUMBER
SEE TABLE	GENERAL MARKET	3 OF 4

FORMAT: TC-tb-prod-C
REVISION: B
DATE: 2022/08/01

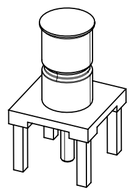

P/N: 73396-0592 ONLY

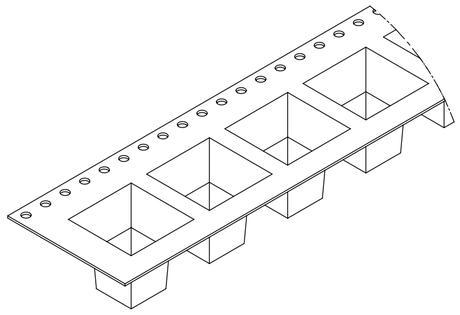

P/N: 89707-0467

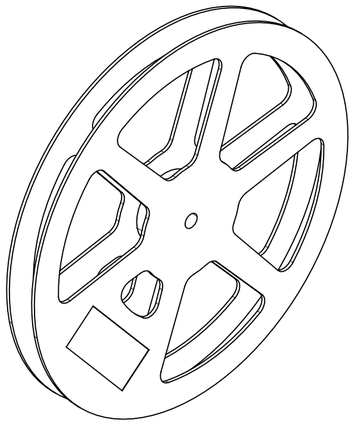

250 SET PER 13" REEL

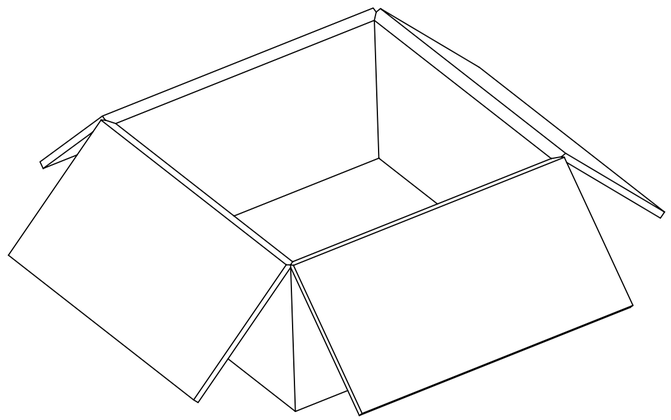

1250 SET PER INNER
CARTON BOX
343 X 343 X 188 REF.

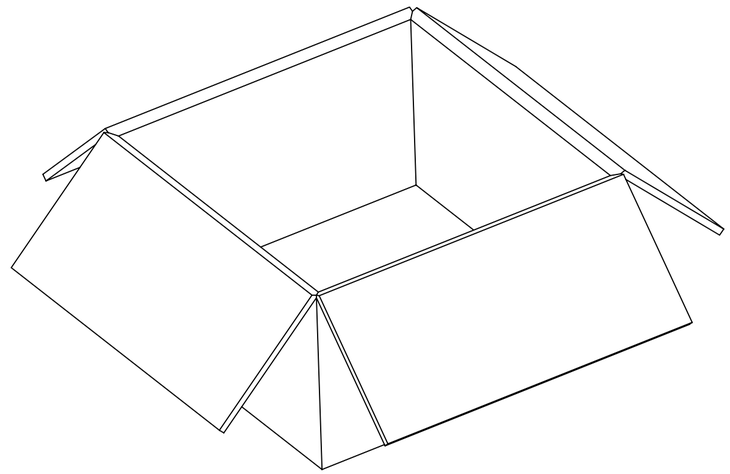

1250 SET PER OUTER
CARTON BOX
394 X 391 X 212 REF.

FUNCTIONAL SYMBOLS: FA = 0, FC = 0, FP = 0	THIS DRAWING CONTAINS INFORMATION THAT IS PROPRIETARY TO MOLEX ELECTRONIC TECHNOLOGIES, LLC AND SHOULD NOT BE USED WITHOUT WRITTEN PERMISSION				
DIMENSION UNITS: mm/INCH	SCALE: NTS	CURRENT REV DESC: ADDED PS-89675-3740 ON DRAWING PER EWR-16426-F		molex	
GENERAL TOLERANCES (UNLESS SPECIFIED)				SMB JACK, VERTICAL PCB 50 OHMS SMB-JR/PCB	
ANGULAR TOL ± 0.5°				PRODUCT CUSTOMER DRAWING	
4 PLACES ±		STATUS: Production		DOCUMENT NUMBER: SD-73100-0207	DOC TYPE: PSD / DOC PART: 001 / REVISION: B8
3 PLACES ±		DRWN: Evita Lin	2025-05-19		
2 PLACES ±		CHK'D: Kerrie Chen	2025-06-04		
1 PLACE ±		APPR: Darry Cheng	2025-06-05		
0 PLACES ±					
DIVISIONAL SYMBOLS	DRAFT WHERE APPLICABLE MUST REMAIN WITHIN DIMENSIONS	THIRD ANGLE PROJECTION	DRAWING: C-SIZE	SERIES: 73100	MATERIAL NUMBER: SEE TABLE / CUSTOMER: GENERAL MARKET / SHEET NUMBER: 4 OF 4

FORMAT: TC-B-prod-C
REVISION: B
DATE: 2022/08/01