Four-Terminal Surface Mount Resistor

L4CL Series

HF RoHS

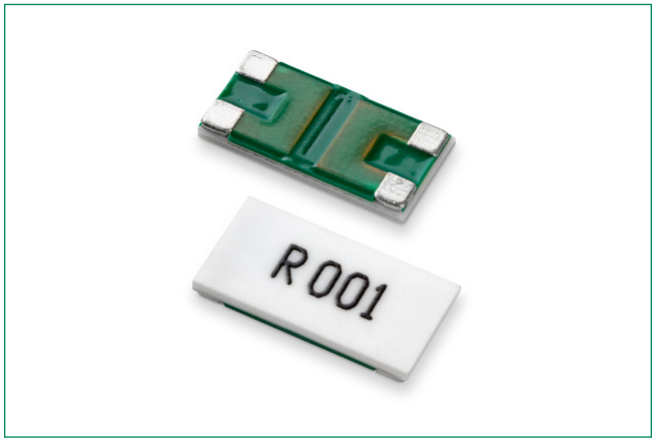

Description

Littelfuse L4CL Series kelvin sensing, low resistance, high power chip resistors exhibit excellent performance in resistance, noise performance, surface heat distribution and have a lower surface temperature.

Features & Benefits

- Tolerance down to 0.3%
- Separate voltage sensing terminals
- Ceramic substrate
- Small size
- High voltage

Application

- Power management
- Low ESL
- Server

Additional Information

Resources | Accessories | Samples

Electrical Specifications

Part Number	Size		Resistance Value		Power Rating (W)	TCR (ppm / °C)	Standard Package Qty
	Inch	mm	Ro (mΩ)	Rt (%)			
L4CL1206LR001FNR	1206	3216	1	±1.0%	0.5	±75	5000
L4CL1206LR002FNR	1206	3216	2	±1.0%	0.5	±75	5000
L4CL1206LR003FNR	1206	3216	3	±1.0%	0.5	±75	5000
L4CL1206LR004FNR	1206	3216	4	±1.0%	0.5	±75	5000
L4CL1206LR005FNR	1206	3216	5	±1.0%	0.5	±50	5000
L4CL1206LR006FNR	1206	3216	6	±1.0%	0.5	±50	5000
L4CL1206LR007FNR	1206	3216	7	±1.0%	0.5	±50	5000
L4CL1206LR008FNR	1206	3216	8	±1.0%	0.5	±50	5000
L4CL1206LR009FNR	1206	3216	9	±1.0%	0.5	±50	5000
L4CL1206LR010DNR	1206	3216	10	±0.5%	0.5	±30	5000
L4CL1206LR011DNR	1206	3216	11	±0.5%	0.5	±30	5000
L4CL1206LR012DNR	1206	3216	12	±0.5%	0.5	±30	5000
L4CL1206LR013DNR	1206	3216	13	±0.5%	0.5	±30	5000
L4CL1206LR014DNR	1206	3216	14	±0.5%	0.5	±30	5000
L4CL1206LR015DNR	1206	3216	15	±0.5%	0.5	±30	5000
L4CL1206LR016DNR	1206	3216	16	±0.5%	0.5	±30	5000
L4CL1206LR018DNR	1206	3216	18	±0.5%	0.5	±30	5000
L4CL1206LR020DNR	1206	3216	20	±0.5%	0.5	±30	5000
L4CL1206LR021DNR	1206	3216	21	±0.5%	0.5	±30	5000
L4CL1206LR022DNR	1206	3216	22	±0.5%	0.5	±30	5000
L4CL1206LR024DNR	1206	3216	24	±0.5%	0.5	±30	5000

© 2023 Littelfuse, Inc.
Specifications are subject to change without notice.
Revised: GD. 04/17/23

Four-Terminal Surface Mount Resistor
L4CL Series

Electrical Specifications (Continued)

Part Number	Size		Resistance Value		Power Rating (W)	TCR (ppm / °C)	Standard Package Qty
	Inch	mm	Ro (mΩ)	Rt (%)			
L4CL1206LR027DNR	1206	3216	27	±0.5%	0.5	±30	5000
L4CL1206LR028DNR	1206	3216	28	±0.5%	0.5	±30	5000
L4CL1206LR030DNR	1206	3216	30	±0.5%	0.5	±30	5000
L4CL1206LR033DNR	1206	3216	33	±0.5%	0.5	±30	5000
L4CL1206LR034DNR	1206	3216	34	±0.5%	0.5	±30	5000
L4CL1206LR036DNR	1206	3216	36	±0.5%	0.5	±30	5000
L4CL1206LR039DNR	1206	3216	39	±0.5%	0.5	±30	5000
L4CL1206LR043DNR	1206	3216	43	±0.5%	0.5	±30	5000
L4CL1206LR047DNR	1206	3216	47	±0.5%	0.5	±30	5000
L4CL1206LR050DNR	1206	3216	50	±0.5%	0.5	±30	5000
L4CL1206LR051DNR	1206	3216	51	±0.5%	0.5	±30	5000
L4CL1206LR056DNR	1206	3216	56	±0.5%	0.5	±30	5000
L4CL1206LR059DNR	1206	3216	59	±0.5%	0.5	±30	5000
L4CL1206LR062DNR	1206	3216	62	±0.5%	0.5	±30	5000
L4CL1206LR068DNR	1206	3216	68	±0.5%	0.5	±30	5000
L4CL1206LR075DNR	1206	3216	75	±0.5%	0.5	±30	5000
L4CL1206LR082DNR	1206	3216	82	±0.5%	0.5	±30	5000
L4CL1206LR091DNR	1206	3216	91	±0.5%	0.5	±30	5000
L4CL1206LR100DNR	1206	3216	100	±0.5%	0.5	±30	5000
L4CL2512LR003FYR	2512	6432	3	±1.0%	1	±50	4000
L4CL2512LR004FYR	2512	6432	4	±1.0%	1	±50	4000
L4CL2512LR005FYR	2512	6432	5	±1.0%	1	±30	4000
L4CL2512LR006FYR	2512	6432	6	±1.0%	1	±30	4000
L4CL2512LR007FYR	2512	6432	7	±1.0%	1	±30	4000
L4CL2512LR008FYR	2512	6432	8	±1.0%	1	±30	4000
L4CL2512LR009FYR	2512	6432	9	±1.0%	1	±30	4000
L4CL2512LR010FYR	2512	6432	10	±1.0%	1	±30	4000
L4CL2512LR011FYR	2512	6432	11	±1.0%	1	±30	4000
L4CL2512LR012FYR	2512	6432	12	±1.0%	1	±30	4000
L4CL2512LR013FYR	2512	6432	13	±1.0%	1	±30	4000
L4CL2512LR014FYR	2512	6432	14	±1.0%	1	±30	4000
L4CL2512LR015FYR	2512	6432	15	±1.0%	1	±30	4000
L4CL2512LR016FYR	2512	6432	16	±1.0%	1	±30	4000
L4CL2512LR018FYR	2512	6432	18	±1.0%	1	±30	4000
L4CL2512LR020FYR	2512	6432	20	±1.0%	1	±30	4000
L4CL2512LR021FYR	2512	6432	21	±1.0%	1	±30	4000
L4CL2512LR022FYR	2512	6432	22	±1.0%	1	±30	4000
L4CL2512LR024FYR	2512	6432	24	±1.0%	1	±30	4000
L4CL2512LR027FYR	2512	6432	27	±1.0%	1	±30	4000
L4CL2512LR028FYR	2512	6432	28	±1.0%	1	±30	4000
L4CL2512LR030FYR	2512	6432	30	±1.0%	1	±30	4000
L4CL2512LR033FYR	2512	6432	33	±1.0%	1	±30	4000
L4CL2512LR034FYR	2512	6432	34	±1.0%	1	±30	4000
L4CL2512LR036FYR	2512	6432	36	±1.0%	1	±30	4000
L4CL2512LR039FYR	2512	6432	39	±1.0%	1	±30	4000

© 2023 Littelfuse, Inc.
Specifications are subject to change without notice.
Revised: GD. 04/17/23

Four-Terminal Surface Mount Resistor
L4CL Series

Electrical Specifications (Continued)

Part Number	Size		Resistance Value		Power Rating (W)	TCR (ppm / °C)	Standard Package Qty
	Inch	mm	Ro (mΩ)	Rt (%)			
L4CL2512LR043FYR	2512	6432	43	±1.0%	1	±30	4000
L4CL2512LR047FYR	2512	6432	47	±1.0%	1	±30	4000
L4CL2512LR050FYR	2512	6432	50	±1.0%	1	±30	4000
L4CL2512LR051FYR	2512	6432	51	±1.0%	1	±30	4000
L4CL2512LR056FYR	2512	6432	56	±1.0%	1	±30	4000
L4CL2512LR059FYR	2512	6432	59	±1.0%	1	±30	4000
L4CL2512LR062FYR	2512	6432	62	±1.0%	1	±30	4000
L4CL2512LR068FYR	2512	6432	68	±1.0%	1	±30	4000
L4CL2512LR075FYR	2512	6432	75	±1.0%	1	±30	4000
L4CL2512LR082FYR	2512	6432	82	±1.0%	1	±30	4000
L4CL2512LR091FYR	2512	6432	91	±1.0%	1	±30	4000
L4CL2512LR100FYR	2512	6432	100	±1.0%	1	±30	4000
L4CL2512L0M50FYR	2512	6432	0.5	±1.0%	0.33	±100	4000
L4CL2512LR001FYR	2512	6432	1	±1.0%	0.5	±75	4000
L4CL2512LR002FYR	2512	6432	2	±1.0%	0.5	±75	4000

Resistors are available in steps of 1 mOhm. Ratings not indicated in the above table may be available on request.

© 2023 Littelfuse, Inc.
Specifications are subject to change without notice.
Revised: GD. 04/17/23

Four-Terminal Surface Mount Resistor
L4CL Series

Temperature De-rating Curve

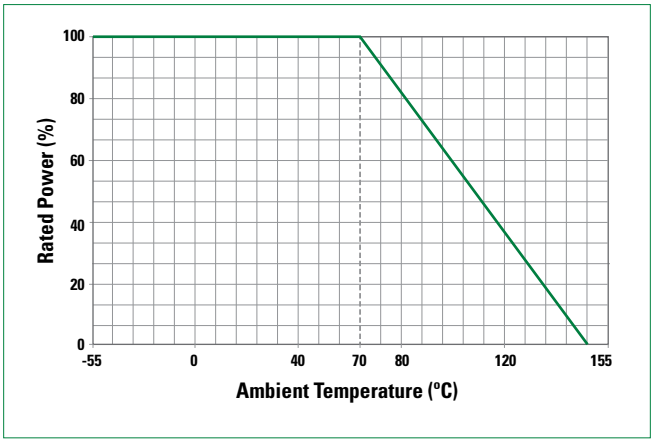

Storage / Environment Conditions

Products should be stored under the following environmental conditions.	
Temperature:	+5 to +35 °C
Humidity:	45 to 85% relative humidity
Moisture Sensitivity Level:	1, J-STD-020
Do not keep products in environments where they may be subject to particulate contamination or harmful gases such as sulfuric acid or hydrogen chloride as it may cause oxidization on electrodes, resulting poor solderability.	
Products should be stored in a space that does not expose to high temperatures, vibration, or direct sunlight.	
Products should be stored in the original airtight packaging until use.	

Soldering Parameters–Wave Soldering

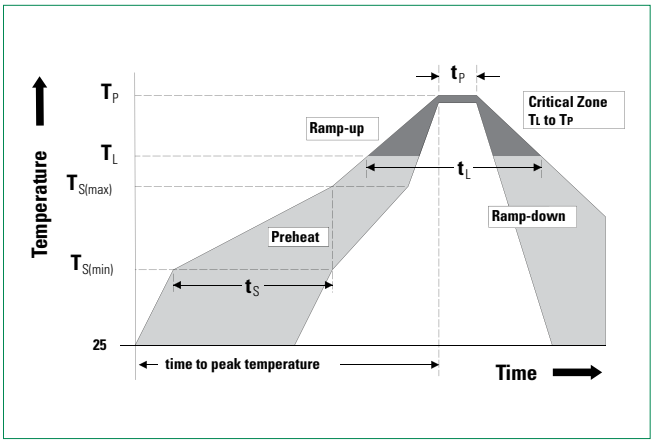

Profile Feature	Pb-Free Assembly
Average Ramp-Up Rate (Ts_{max} to Tp)	3 °C / second max
Preheat Temperature Minimum (Ts_{min})	150 °C
Temperature Maximum (Ts_{max})	200 °C
Time (Ts_{min} to (Ts_{max})	60–180 seconds
Time maintained above Temperature Minimum (T_L) Time (t_L)	217 °C 60–150 seconds
Peak Temperature (T_P)	260 +0 °C
Time within 5 °C of Actual Peak Temperature (tp)	20–40 seconds
Ramp-Down Rate	6 °C / second Maximum
Time 25 °C to Peak Temperature	8 minutes Maximum

© 2023 Littelfuse, Inc.
Specifications are subject to change without notice.
Revised: GD. 04/17/23

Four-Terminal Surface Mount Resistor
L4CL Series

Reliability Specifications

Test	Procedure	Specifications
ESD	HBM, 100pF, 1.5k ohms Repetition: 5 times Component Classification: 5C (25KV)	±1.0% Appearance: Without distinct damage, and the marking shall be legible.
Load Life (Operational Life)	Test Temperature: 125°C Applied voltage: rated power (derated Power will be required if temp exceeds the derating point of part) Test Period: 1,000 hours (condition D)	±1.0% Appearance: Without distinct damage, and the marking shall be legible.
Biased Humidity	Test conditions: 85°C and 85% RH 10% of rated power Test Period 1,000 hours	±1.0% Appearance: Without distinct damage, and the marking shall be legible.
Temp. Cycling (Thermal Shock)	Repeat 1,000 cycles as follows: -55°C for 30 minutes 125°C for 30 minutes Transition time of 1 minute max	±1.0% Appearance: Without distinct damage, and the marking shall be legible.
High Temp. Exposure (Storage)	Test Temp 125°C Test Period: 1,000 hours No Electrical Load	±1.0% Appearance: Without distinct damage, and the marking shall be legible.
Resistance to soldering heat	Condition B (Solder dip, no pre-heat) 260°C	±1.0% Parts must meet initial electrical specs.
Resistance to Solvents	3 minute soak 2-3 ounce force 10 strokes/repetition 3 repetitions	Appearance: Without distinct damage, and the marking shall be legible.
Terminal Strength (SMD)	Applied force based on part size	±1.0% Appearance: Without distinct damage, and the marking shall be legible.
Flammability	UL-94 V-0 or V-1 are acceptable Electrical test not required	V-0 burning less than 10 seconds or V-1 burning less than 30 seconds
Flame Retardance	Mounted parts subjected to voltages from 9.0 to 32 VDC (current clamped up to 500A)	No Flame when full automotive battery potential is applied.
Vibration	Frequency: 10-2,000 Hz Acceleration: 5G Test duration: 20 minutes, 12 cycles	±1.0% Appearance: Without distinct damage, and the marking shall be legible.
Mechanical Shock	Force: 100G peak Test duration: 6 ms Half-sine waveform Velocity: 12.3ft/sec	±1.0% Appearance: Without distinct damage, and the marking shall be legible.
Board Flex	90 mm span between fulcrums 2 mm bend 60 seconds minimum holding time	±1.0% Appearance: Without distinct damage, and the marking shall be legible.
Solderability	Non-activated flux dip: 5-10 seconds SAC solder dip: 5 seconds at 245°C	A new solder shall cover minimum of 95%.

© 2023 Littelfuse, Inc.
Specifications are subject to change without notice.
Revised: GD. 04/17/23

Four-Terminal Surface Mount Resistor
L4CL Series

Dimensions

All dimensions in mm

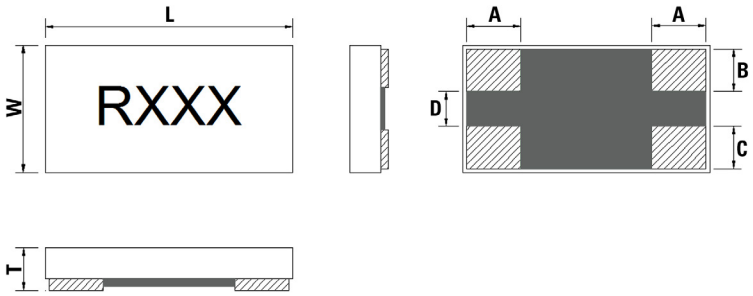

Part Number	W	L	T	A	B	C	D
L4CL1206	1.60±0.20	3.20±0.20	0.60±0.20	0.60±0.20	0.55±0.20	0.55±0.20	0.50±0.20
L4CL2512	3.10±0.20	6.30±0.20	0.60±0.20	0.95±0.20	1.05±0.20	1.05±0.20	1.00±0.20

Recommended Land Pattern

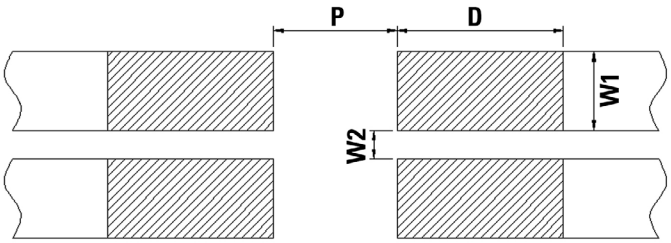

Part Number	P	D	W1	W2	Loading
L4CL1206	1.20 mm	1.80 mm	1.10 mm	0.30 mm	0.5 W
L4CL2512	3.10 mm	2.00 mm	1.40 mm	0.70 mm	1.0 W

Packaging

Part Number	Halogen Free	Packaging Option	Quantity	Quantity & Packaging Codes
L4CL1206	Yes	Tape and Reel	5000	NR
L4CL2512	Yes	Tape and Réel	4000	YR

© 2023 Littelfuse, Inc.
Specifications are subject to change without notice.
Revised: GD. 04/17/23

Four-Terminal Surface Mount Resistor
L4CL Series

Part Numbering System

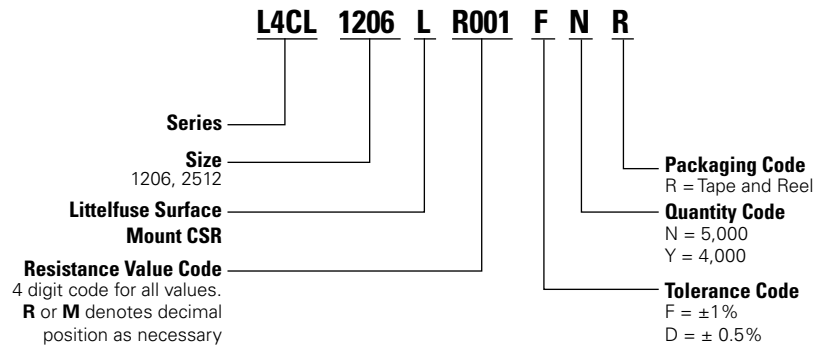

Tape and Reel Specifications

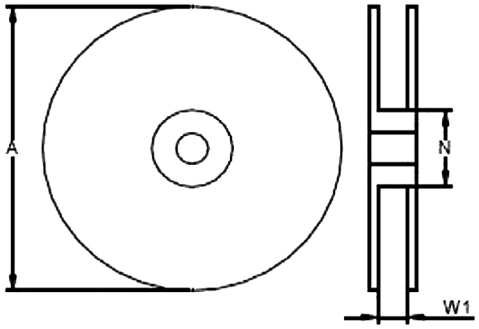

Part Number	A±5 (mm)	N±2 (mm)	W1±1 (mm)
L4CL1206	178	60	9.0
L4CL2512	178	60	13

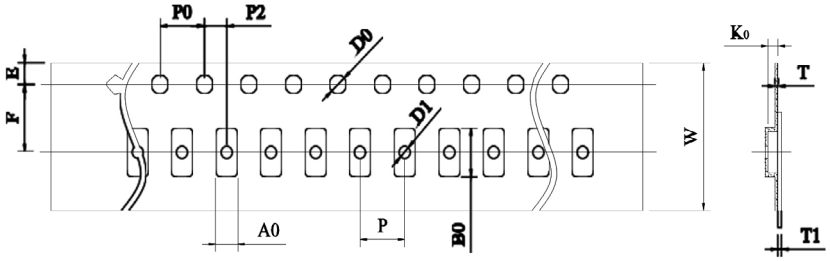

Part Number	W	P0	P	P2	A0	B0	D0	F	E	T	T1	K0
L4CL1206	8.00±0.30	4.00±0.10	4.00±0.10	2.00±0.10	1.90±0.20	3.50±0.20	1.50±0.10	3.50±0.10	1.75±0.10	0.20±0.10	Max. 0.1	0.85±0.20
L4CL2512	12.00±0.30	4.00±0.10	4.00±0.10	2.00±0.10	3.40±0.20	6.75±0.20	1.50±0.10	5.50±0.10	1.75±0.10	0.25±0.10	Max. 0.1	0.81±0.20

Disclaimer Notice - Information furnished is believed to be accurate and reliable. However, users should independently evaluate the suitability of and test each product selected for their own applications. Littelfuse products are not designed for, and may not be used in, all applications. Read complete Disclaimer Notice at http://www.littelfuse.com/disclaimer-electronics.

© 2023 Littelfuse, Inc.
Specifications are subject to change without notice.
Revised: GD. 04/17/23