200W Surface Mount Transient Voltage Suppressors

Features

- Working peak reverse voltage range – 5.0V to 190V.
- Peak power dissipation 200W @10 x 1000 us Pulse
- Low profile package.
- Excellent clamping capability.
- Glass passivated junction.
- Fast response time: typically less than 1 ns for Uni-direction.
- Typical IR less than 1uA above 10V.
- Plastic material has UL flammability classification 94V-O
- RoHS compliant in lead-free versions

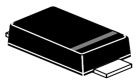

SOD-123FL

Mechanical Characteristics

CASE: Void-free, Molded Plastic over glass passivated junction..
Mounting Position: Any
Polarity: by cathode band denotes uni-directional device.
Qualified max reflow temperature: 260°C

Maximum Ratings And Characteristics @ 25°C Ambient Temperature (unless otherwise noted)

Parameter	Symbol	Value	Units
Peak Pulse Power Dissipation on 10/1000 us Waveform (Note 1, 2, FIG.1)	P_{PPM}	Min 200	W
Peak Pulse Current of on 10/1000us Waveform (Note 1, FIG.3)	I_{PPM}	See Table 1	Amps
Operating Junction Temperature Range	T_J	-55 to 150	°C
Storage Temperature Range	T_{STG}	-55 to 150	°C

Notes:

1. Non-repetitive current pulse, per Fig.3 and derated above T_A=25°C per Fig.2.

Electrical Specification @ Tamb 25°C

Type Number		Marking		Reverse Stand-Off Voltage	Breakdown Voltage Min. @I_T	Breakdown Voltage Max. @ I_T	Test Current	Maximum Clamping Voltage @I_{PP}	Peak Pulse Current	Reverse Leakage @V_{RMW}
Uni	Bi	Uni	Bi	V_{RMW}(V)	$V_{BR\ MIN}$(V)	$V_{BR\ MAX}$(V)	I_T (mA)	V_C(V)	I_{PP}(A)	I_R(uA)
SMFJ5.0A	SMFJ5.0CA	5.0A	5.0CA	5.0	6.40	7.25	10	9.2	21.7	400.0
SMFJ6.0A	SMFJ6.0CA	6.0A	6.0CA	6.0	6.67	7.67	10	10.3	19.4	400.0
SMFJ6.5A	SMFJ6.5CA	6.5A	6.5CA	6.5	7.22	8.30	10	11.2	17.9	250.0
SMFJ7.0A	SMFJ7.0CA	7.0A	7.0CA	7.0	7.78	8.95	10	12	16.7	100.0
SMFJ7.5A	SMFJ7.5CA	7.5A	7.5CA	7.5	8.33	9.58	1.0	12.9	15.5	50.0
SMFJ8.0A	SMFJ8.0CA	8.0A	8.0CA	8.0	8.89	10.23	1.0	13.6	14.7	25.0
SMFJ8.5A	SMFJ8.5CA	8.5A	8.5CA	8.5	9.44	10.82	1.0	14.4	13.9	10.0
SMFJ9.0A	SMFJ9.0CA	9.0A	9.0CA	9.0	10.0	11.5	1.0	15.4	13	5.0
SMFJ10A	SMFJ10CA	10A	10CA	10	11.1	12.8	1.0	17	11.8	2.5
SMFJ11A	SMFJ11CA	11A	11CA	11	12.2	14.0	1.0	18.2	11	2.5
SMFJ12A	SMFJ12CA	12A	12CA	12	13.3	15.3	1.0	19.9	10.1	2.5
SMFJ13A	SMFJ13CA	13A	13CA	13	14.4	16.5	1.0	21.5	9.3	1.0
SMFJ14A	SMFJ14CA	14A	14CA	14	15.6	17.9	1.0	23.2	8.6	1.0
SMFJ15A	SMFJ15CA	15A	15CA	15	16.7	19.2	1.0	24.4	8.2	1.0
SMFJ16A	SMFJ16CA	16A	16CA	16	17.8	20.5	1.0	26	7.7	1.0
SMFJ17A	SMFJ17CA	17A	17CA	17	18.9	21.7	1.0	27.6	7.2	1.0
SMFJ18A	SMFJ18CA	18A	18CA	18	20.0	23.3	1.0	29.2	6.8	1.0
SMFJ20A	SMFJ20CA	20A	20CA	20	22.2	25.5	1.0	32.4	6.2	1.0
SMFJ22A	SMFJ22CA	22A	22CA	22	24.4	28.0	1.0	35.5	5.6	1.0
SMFJ24A	SMFJ24CA	24A	24CA	24	26.7	30.7	1.0	38.9	5.1	1.0
SMFJ26A	SMFJ26CA	26A	26CA	26	28.9	33.2	1.0	42.1	4.8	1.0
SMFJ28A	SMFJ28CA	28A	28CA	28	31.1	35.8	1.0	45.4	4.4	1.0
SMFJ30A	SMFJ30CA	30A	30CA	30	33.3	38.3	1.0	48.4	4.1	1.0
SMFJ33A	SMFJ33CA	33A	33CA	33	36.7	42.2	1.0	53.3	3.8	1.0
SMFJ36A	SMFJ36CA	36A	36CA	36	40.0	46.0	1.0	58.1	3.4	1.0
SMFJ40A	SMFJ40CA	40A	40CA	40	44.4	51.1	1.0	64.5	3.1	1.0
SMFJ43A	SMFJ43CA	43A	43CA	43	47.8	54.9	1.0	69.4	2.9	1.0
SMFJ45A	SMFJ45CA	45A	45CA	45	50.0	57.5	1.0	72.7	2.8	1.0
SMFJ48A	SMFJ48CA	48A	48CA	48	53.3	61.3	1.0	77.4	2.6	1.0
SMFJ51A	SMFJ51CA	51A	51CA	51	56.7	65.2	1.0	82.4	2.4	1.0
SMFJ54A	SMFJ54CA	54A	54CA	54	60.0	69.0	1.0	87.1	2.3	1.0
SMFJ58A	SMFJ58CA	58A	58CA	58	64.4	74.1	1.0	93.6	2.1	1.0
SMFJ60A	SMFJ60CA	60A	60CA	60	66.7	76.7	1.0	96.8	1.8	1.0
SMFJ64A	SMFJ64CA	64A	64CA	64	71.1	81.8	1.0	103	1.7	1.0
SMFJ70A	SMFJ70CA	70A	70CA	70	77.8	89.5	1.0	113	1.5	1.0
SMFJ75A	SMFJ75CA	75A	75CA	75	83.3	95.8	1.0	121	1.4	1.0
SMFJ78A	SMFJ78CA	78A	78CA	78	86.7	99.7	1.0	126	1.4	1.0

Type Number		Marking		Reverse Stand-Off Voltage	Breakdown Voltage Min. @I_T	Breakdown Voltage Max. @ I_T	Test Current	Maximum Clamping Voltage @I_{PP}	Peak Pulse Current	Reverse Leakage @V_{RMW}
Uni	Bi	Uni	Bi	V_{RMW}(V)	$V_{BR\ MIN}$(V)	$V_{BR\ MAX}$(V)	I_T (mA)	V_C(V)	I_{PP}(A)	I_R(uA)
SMFJ85A	SMFJ85CA	85A	85CA	85	94.4	108.2	1.0	137	1.3	1.0
SMFJ90A	SMFJ90CA	90A	90CA	90	100.0	115.5	1.0	146	1.2	1.0
SMFJ100A	SMFJ100CA	100	100C	100	111.0	128.0	1.0	162	1.1	1.0
SMFJ110A	SMFJ110CA	110	110C	110	122.0	140.5	1.0	177	1.0	1.0
SMFJ120A	SMFJ120CA	120	120C	120	133.0	153.0	1.0	193	0.9	1.0
SMFJ130A	SMFJ130CA	130	130C	130	144.0	165.5	1.0	209	0.8	1.0
SMFJ150A	SMFJ150CA	150	150C	150	167.0	192.5	1.0	243	0.7	1.0
SMFJ160A	SMFJ160CA	160	160C	160	178.0	205.0	1.0	259	0.7	1.0
SMFJ170A	SMFJ170CA	170	170C	170	189.0	217.5	1.0	275	0.6	1.0
SMFJ180A	SMFJ180CA	180	180C	180	198.0	230.4	1.0	292	0.6	1.0
SMFJ190A	SMFJ190CA	190	190C	190	209.0	243.2	1.0	308	0.5	1.0

Ratings and Characteristic Curves T_A=25°C unless otherwise noted

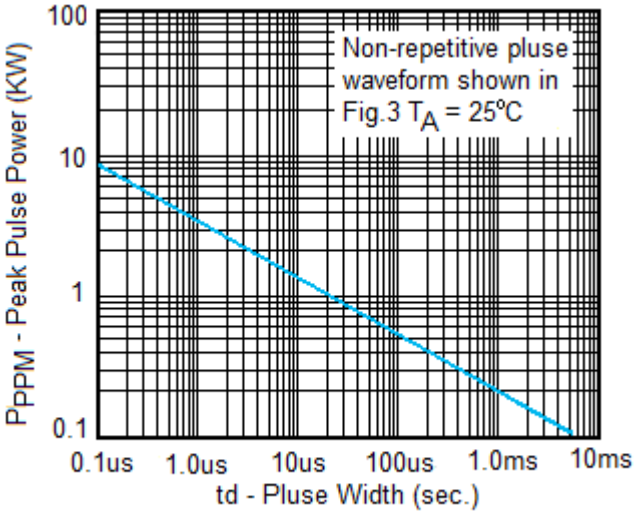

Fig. 1 Peak Pulse Power Rating

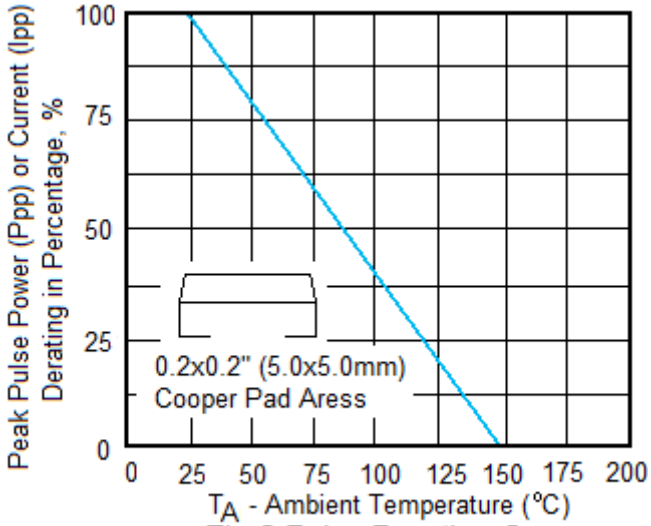

Fig.2 Pulse Derating Cure

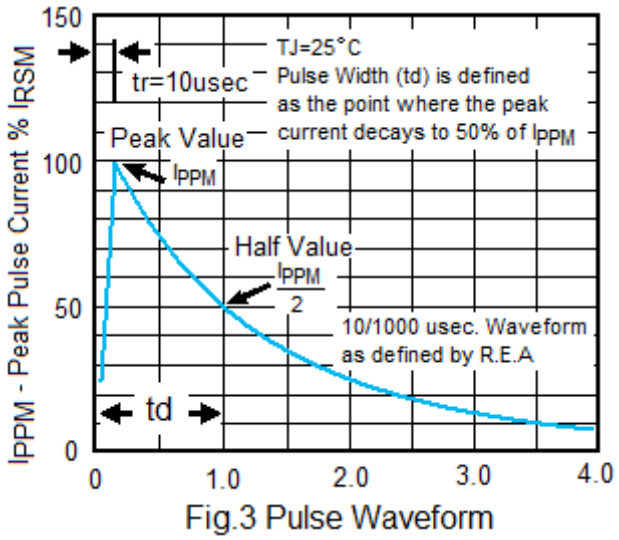

Fig.3 Pulse Waveform

Package Outline Dimensions and Pad Layouts

SOD-123FL

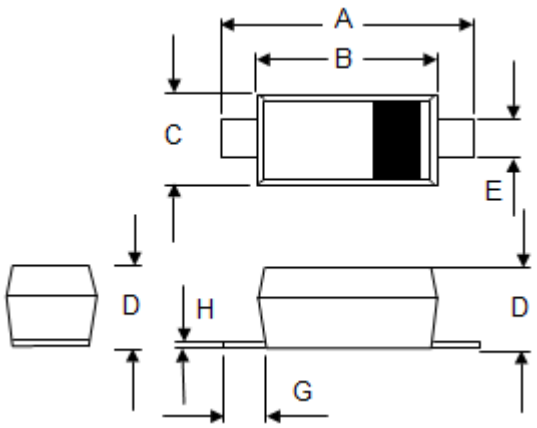

Dim	Millimeters		Inches	
	Min	Max	Min	Max
A	3.40	3.85	0.142	0.150
B	2.50	2.90	0.098	0.114
C	1.40	1.80	0.055	0.071
D	0.90	1.35	0.035	0.053
E	0.50	1.10	0.020	0.043
G	0.25	------	0.010	----
H	------	0.20	----	0.008