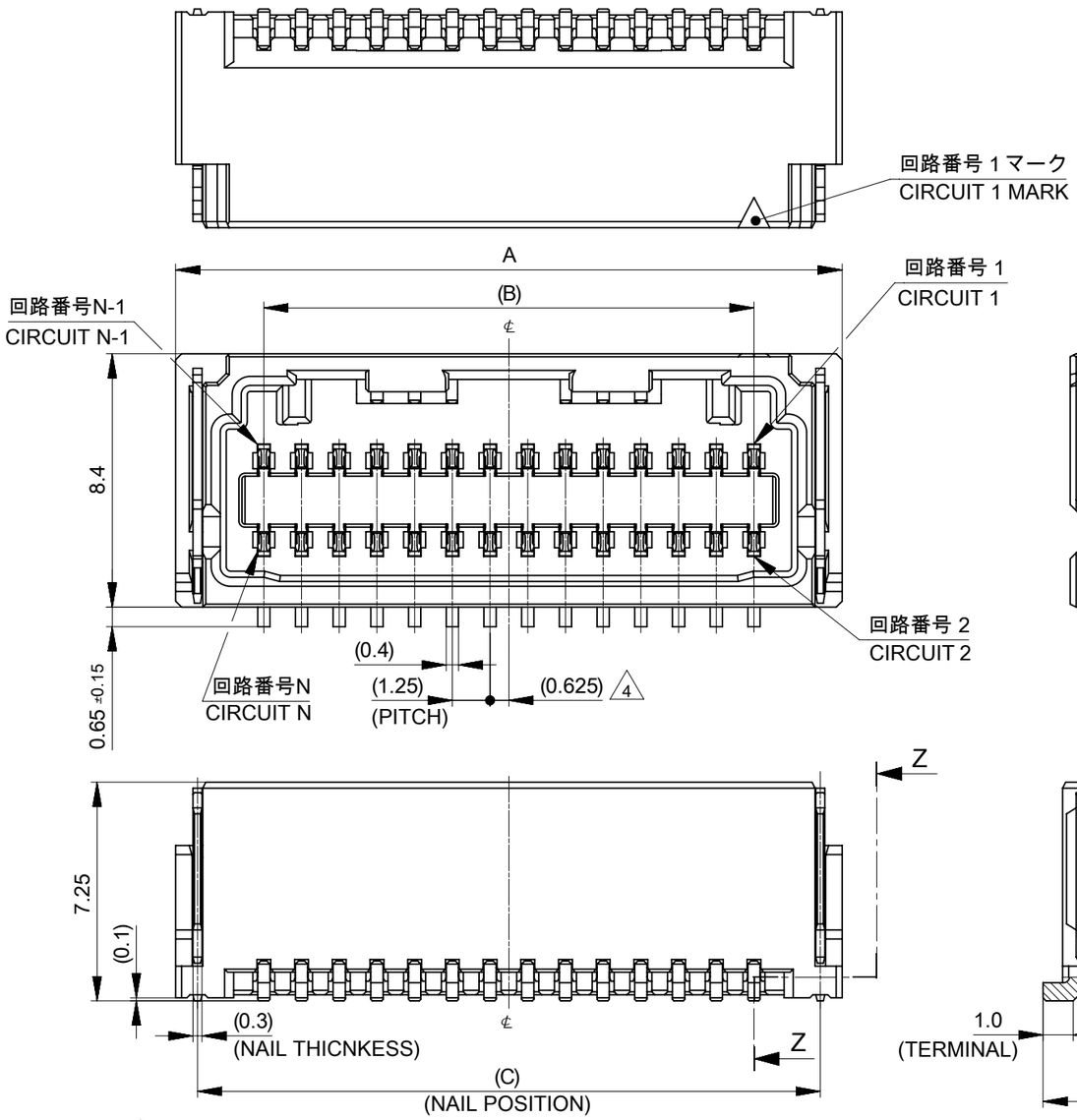

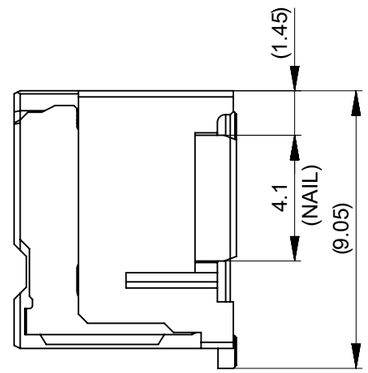

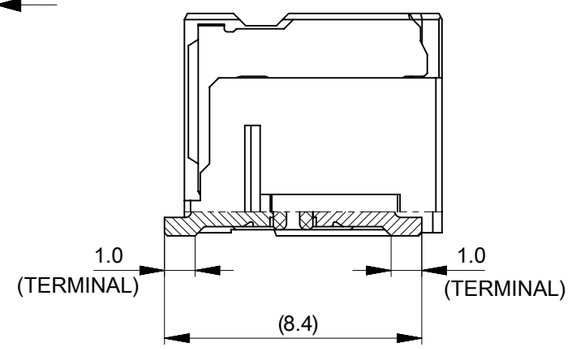

SECTION Z-Z

注記 NOTES

1. 材質及び仕上げ (めっき仕様) : TABLE 1, TABLE 2 参照
   MATERIAL AND FINISHES (PLATING SPECIFICATION) : SEE TABLE 1,TABLE 2.
2. 嵌合相手 : 505432シリーズ
   MATE WITH : 505432 SERIES
3. 端子テール部 及び ネイルの平坦度 : 0.12 MAXIMUM.
   TAIL AND NAIL COPLANARITY TO BE 0.12 MAXIMUM.
4. 極数 / 2 = 偶数に適用
   APPLY TO CIRCUIT SIZE / 2 = EVEN.
5. 製品仕様書 : 5054320000 PS 006
   PRODUCT SPECIFICATION : 5054320000 PS 006
6. 発注番号 : SHEET5,6参照
   ORDER NUMBER : PLEASE REFER TO SHEET 5,6

505433 ** * *

極数 CIRCUIT SIZE

番号 NO.	ハウジングカラー HOUSING COLOR
0	ナチュラル (ベージュ) NATURAL (BEIGE)
1	黒 BLACK
2	赤 RED
4	青 BLUE

番号 NO.	接点部 金めっき厚 CONTACT GOLD PLATING THICKNESS [MICROMETER MINIMUM]	カバーテープ COVER TAPE
9	0.1	有 WITH
3	0.38	
5	0.76	
6	0.1	無 WITHOUT
2	0.38	
4	0.76	

7. コネクタ取扱説明書 : 5054320000-AS PS 000
   APPLICATION SPECIFICATION : 5054320000-AS PS 000

				5	26.25	29.4	25	30.85	42
					25	28.15	23.75	29.6	40
					23.75	26.9	22.5	28.35	38
					22.5	25.65	21.25	27.1	36
49.4	45.4	20.2	44±0.3		21.25	24.4	20	25.85	34
					20	23.15	18.75	24.6	32
					18.75	21.9	17.5	23.35	30
					17.5	20.65	16.25	22.1	28
					16.25	19.4	15	20.85	26
				4.2	15	18.15	13.75	19.6	24
37.4	33.4	14.2	32±0.3		13.75	16.9	12.5	18.35	22
					12.5	15.65	11.25	17.1	20
					11.25	14.4	10	15.85	18
					10	13.15	8.75	14.6	16
					8.75	11.9	7.5	13.35	14
29.4	25.4	11.5	$24^{+0.3}_{-0.1}$		7.5	10.65	6.25	12.1	12
					6.25	9.4	5	10.85	10
					5	8.15	3.75	9.6	8
J	H	G	F	E	D	C	B	A	極数 CIRCUIT SIZE

1 TABLE 1

番号 NO.	部品 PART	材質 MATERIAL
①	ハウジング HOUSING	ポリアミド(PA) UL94V-0 色 : SHEET 5,6参照 POLY AMIDE(PA) UL94V-0 COLOR : SEE SHEET 5,6
②	ターミナル TERMINAL	黄銅 BRASS
		接点部 : 金めっき めっき厚は注記6参照 CONTACT : GOLD PLATING PLATING THICKNESS : SEE NOTE 6.
		ニッケルめっき (下地めっき) : 2.0 MICROMETER MINIMUM NICKEL PLATING (UNDER PLATING)
③	ネイル NAIL	黄銅 BRASS
		錫ビスマスめっき : 1.0 MICROMETER MINIMUM TIN-BISMUTH PLATING
		ニッケルめっき (下地めっき) : 1.0 MICROMETER MINIMUM NICKEL PLATING (UNDER PLATING)
④	カバーテープ COVER TAPE	ポリイミド POLYIMIDE

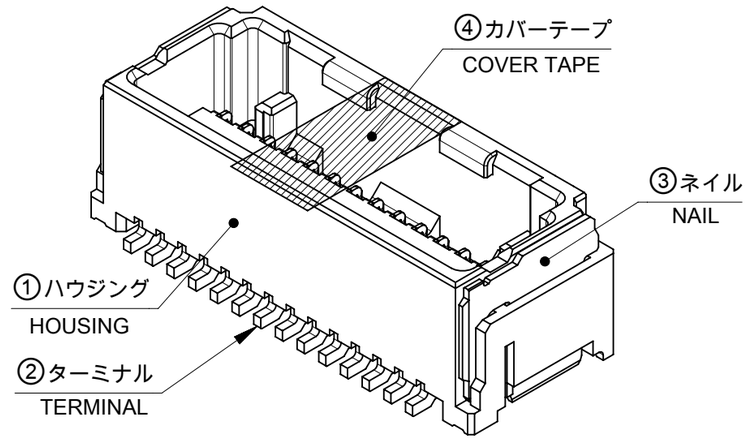

DOCUMENT STATUS	P1	RELEASE DATE	2026/02/10 10:00:20

THIS DRAWING CONTAINS INFORMATION THAT IS PROPRIETARY TO MOLEX ELECTRONIC TECHNOLOGIES, LLC AND SHOULD NOT BE USED WITHOUT WRITTEN PERMISSION

DIMENSION UNITS: mm | SCALE: NTS

GENERAL TOLERANCES (UNLESS SPECIFIED)

ANGULAR TOL	±	3.0 °
4 PLACES	±	0.2
3 PLACES	±	0.2
2 PLACES	±	0.2
1 PLACE	±	0.2
0 PLACES	±	0.2

DRAFT WHERE APPLICABLE MUST REMAIN WITHIN DIMENSIONS

CURRENT REV DESC: REMOVED OBSOLETED PART NUMBERS AS PER PCN#516659

EC NO: 844075
DRWN: SAMPRS 2025/12/31
CHK'D: GGA 2026/02/10
APPR: GGA 2026/02/10

INITIAL REVISION:
DRWN: TENAGASE 2020/01/20
APPR: KOMURAKAMI 2020/01/21

THIRD ANGLE PROJECTION | DRAWING: A3-SIZE | SERIES: 505433

molex

MICRO-LOCK PLUS 1.25 W/B
DUAL ROW VERTICAL SMT PLUG ASSEMBLY
GOLD PLATING

PRODUCT CUSTOMER DRAWING

DOCUMENT NUMBER	DOC TYPE	DOC PART	REVISION
5054330003-SD	PSD	000	D1

MATERIAL NUMBER	CUSTOMER	SHEET NUMBER
SEE SHEET 5,6	GENERAL	1 OF 6

FORMAT: master-tb-prod-A3
REVISION: J1
DATE: 2021/05/01

製品形状
PRODUCT SHAPE

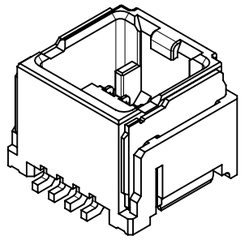

8-14極
8-14 CIRCUIT

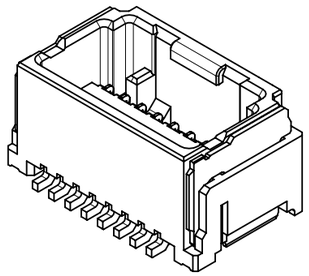

16-24極
16-24 CIRCUIT

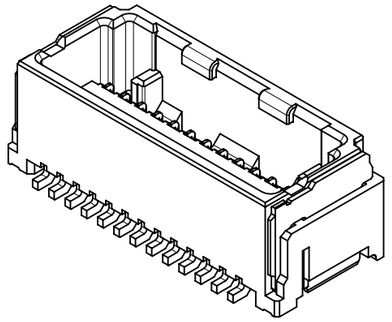

26-32極
26-32 CIRCUIT

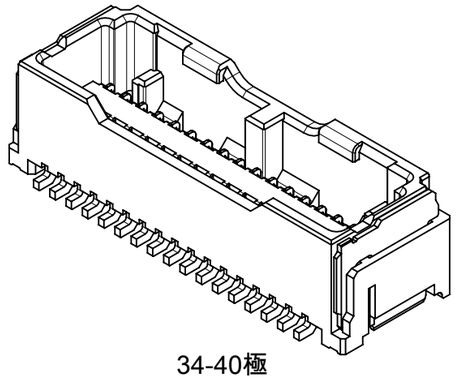

34-40極
34-40 CIRCUIT

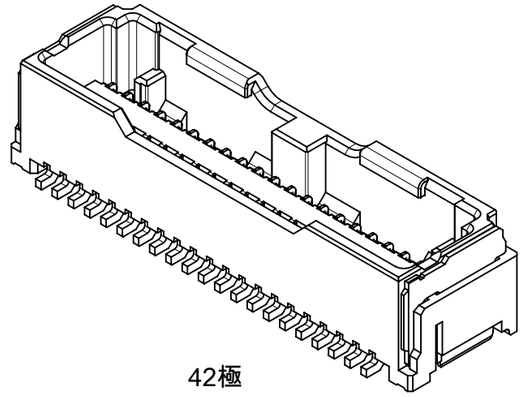

42極
42 CIRCUIT

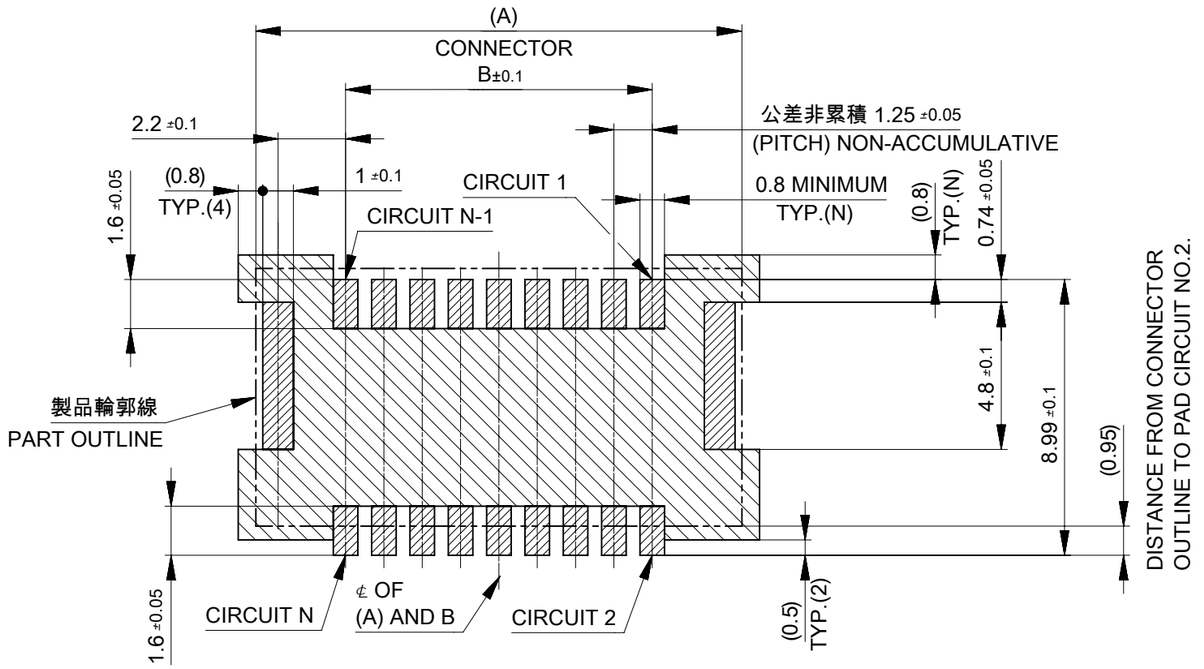

基板パターンレイアウト（参考）
（参考：基板厚 1.6mm, メタルマスク厚さ 0.15mm, マスク開口率 100%）

RECOMMEND PCB LAYOUT : COMPONENT SIDE
(REFERENCE : PCB THICKNESS 1.6mm, STENCIL THICKNESS 0.15mm, APERTURE RATIO 100%)

パターン非推奨エリア
パターンを引き回す際は、製品機能に影響がないことをご確認ください。
PATTERN IS NOT RECOMMENDED ON THE HATCHING AREA
PLEASE CHECK NOT TO HAVE PROBLEM FOR PRODUCT FUNCTION
WHEN SETTING PATTERN ON THE HATCHING AREA.

嵌合状態図
MATED CONNECTORS

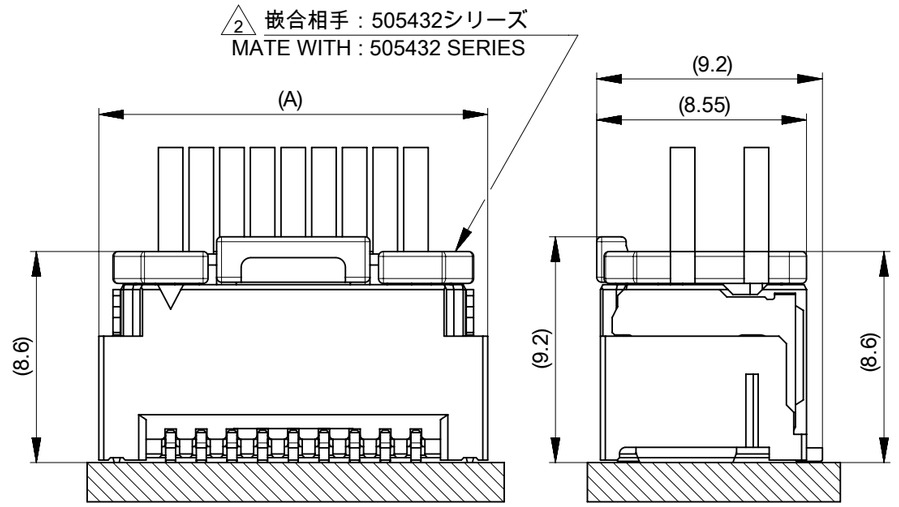

THIS DRAWING CONTAINS INFORMATION THAT IS PROPRIETARY TO MOLEX ELECTRONIC TECHNOLOGIES, LLC AND SHOULD NOT BE USED WITHOUT WRITTEN PERMISSION

DIMENSION UNITS	SCALE
mm	NTS

GENERAL TOLERANCES (UNLESS SPECIFIED)

ANGULAR TOL	±	3.0 °
4 PLACES	±	0.2
3 PLACES	±	0.2
2 PLACES	±	0.2
1 PLACE	±	0.2
0 PLACES	±	0.2

DRAFT WHERE APPLICABLE MUST REMAIN WITHIN DIMENSIONS

CURRENT REV DESC: REMOVED OBSOLETED PART NUMBERS AS PER PCN#516659

EC NO: 844075
DRWN: SAMPRS 2025/12/31
CHK'D: GGA 2026/02/10
APPR: GGA 2026/02/10

INITIAL REVISION:
DRWN: TENAGASE 2020/01/20
APPR: KOMURAKAMI 2020/01/21

molex

MICRO-LOCK PLUS 1.25 W/B
DUAL ROW VERTICAL SMT PLUG ASSEMBLY
GOLD PLATING

PRODUCT CUSTOMER DRAWING

DOCUMENT NUMBER	DOC TYPE	DOC PART	REVISION
5054330003-SD	PSD	000	D1

THIRD ANGLE PROJECTION	DRAWING	SERIES	MATERIAL NUMBER	CUSTOMER	SHEET NUMBER
	A3-SIZE	505433	SEE SHEET 5,6	GENERAL	2 OF 6

DOCUMENT STATUS	P1	RELEASE DATE	2026/02/10 10:00:20

FORMAT: master-lb-prod-A3
REVISION: J1
DATE: 2021/05/01

吸着エリア違い
SUCTION AREA DIFFERENCE

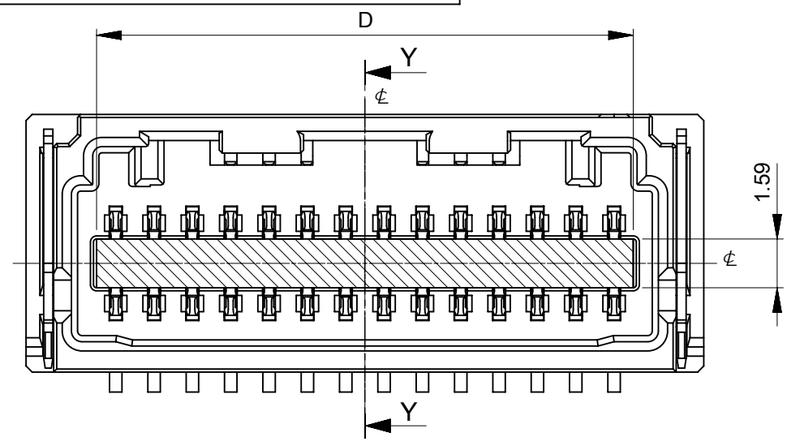

505433 **6*/**2*/**4*
カバーテープ無し
WITHOUT COVER TAPE

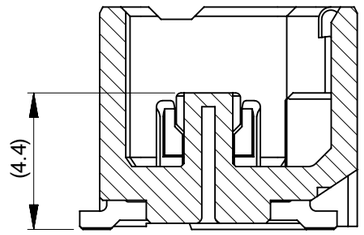

SECTION Y-Y
吸着高さ SUCTION HEIGHT

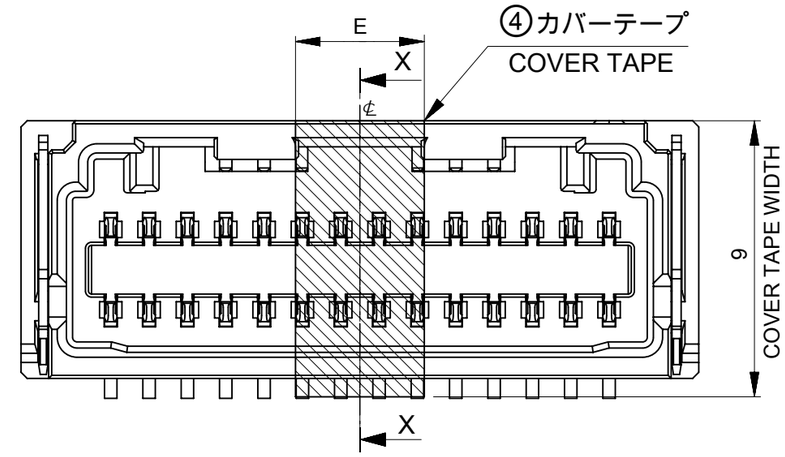

505433 **9*/**3*/**5*
カバーテープ有り
WITH COVER TAPE

8-32極
8-32 CIRCUIT

34-42極
34-42 CIRCUIT

SECTION X-X
吸着テープ高さ COVER TAPE HEIGHT

THIS DRAWING CONTAINS INFORMATION THAT IS PROPRIETARY TO MOLEX ELECTRONIC TECHNOLOGIES, LLC AND SHOULD NOT BE USED WITHOUT WRITTEN PERMISSION

DIMENSION UNITS	SCALE
mm	NTS

GENERAL TOLERANCES (UNLESS SPECIFIED)

ANGULAR TOL	±	3.0 °
4 PLACES	±	0.2
3 PLACES	±	0.2
2 PLACES	±	0.2
1 PLACE	±	0.2
0 PLACES	±	0.2

DRAFT WHERE APPLICABLE MUST REMAIN WITHIN DIMENSIONS

CURRENT REV DESC: REMOVED OBSOLETED PART NUMBERS AS PER PCN#516659

EC NO: 844075
DRWN: SAMPRS 2025/12/31
CHK'D: GGA 2026/02/10
APPR: GGA 2026/02/10

INITIAL REVISION:
DRWN: TENAGASE 2020/01/20
APPR: KOMURAKAMI 2020/01/21

THIRD ANGLE PROJECTION | DRAWING: A3-SIZE | SERIES: 505433

molex

MICRO-LOCK PLUS 1.25 W/B
DUAL ROW VERTICAL SMT PLUG ASSEMBLY
GOLD PLATING

PRODUCT CUSTOMER DRAWING

DOCUMENT NUMBER	DOC TYPE	DOC PART	REVISION
5054330003-SD	PSD	000	D1

MATERIAL NUMBER	CUSTOMER	SHEET NUMBER
SEE SHEET 5,6	GENERAL	3 OF 6

DOCUMENT STATUS	P1	RELEASE DATE	2026/02/10 10:00:20

FORMAT: master-tb-prod-A3
REVISION: J1
DATE: 2021/05/01

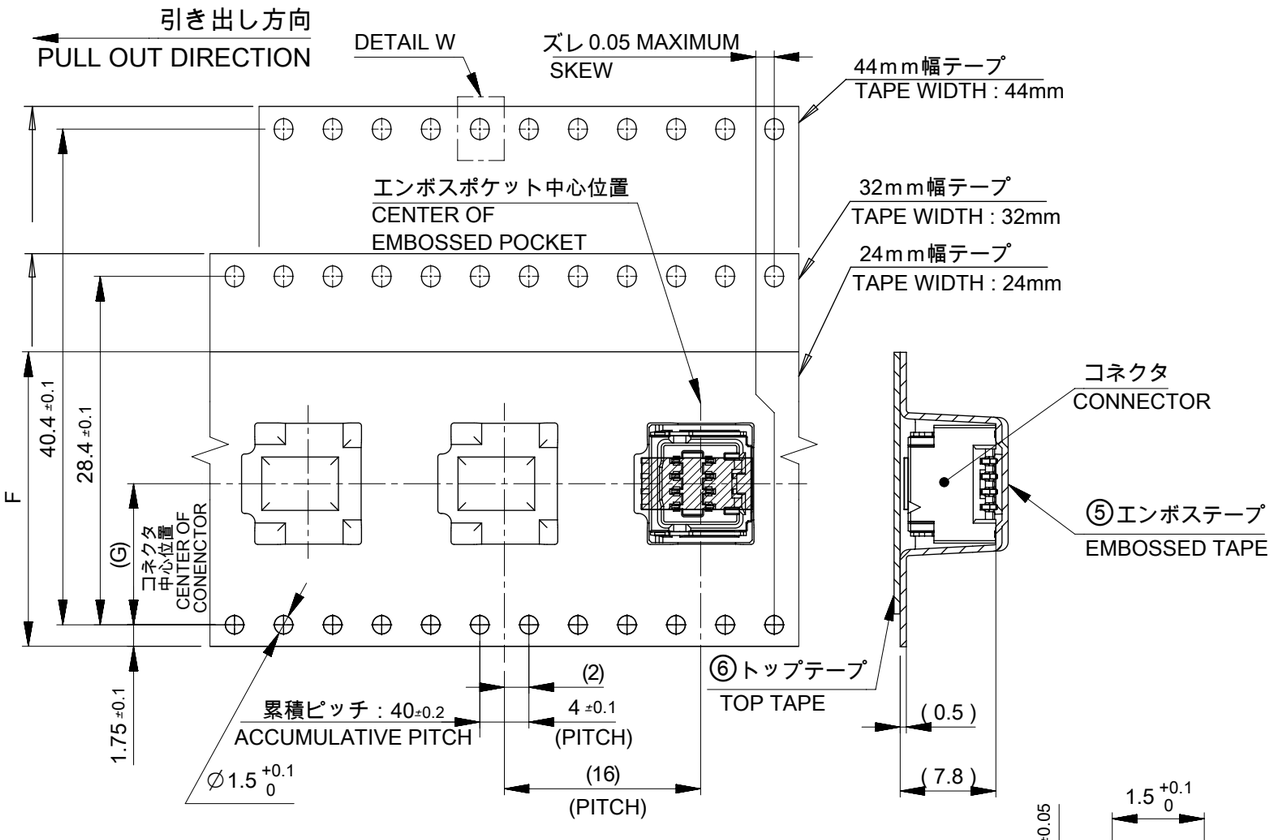

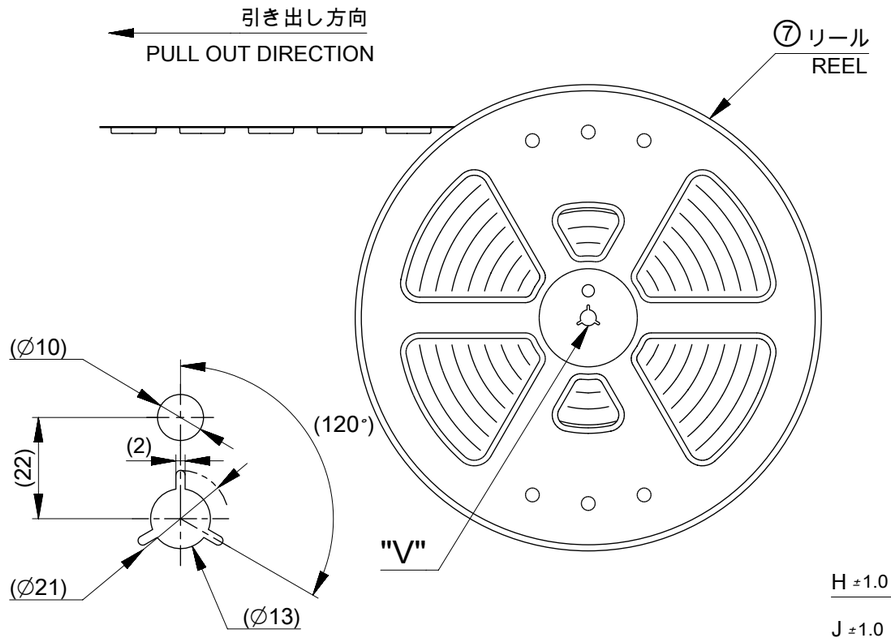

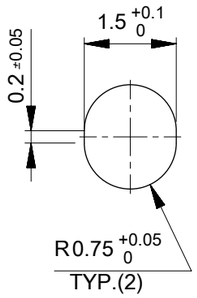

NOTES

8. 梱包数量　：　500個
   NUMBER OF CONNECTIORS : 500 PIECES/REEL.
9. 梱包仕様書：5054339200 PS 200
   PACKING SPECIFICATION : 5054339200 PS 200
10. リードテープ長さ
    LEAD TAIL LENGTH

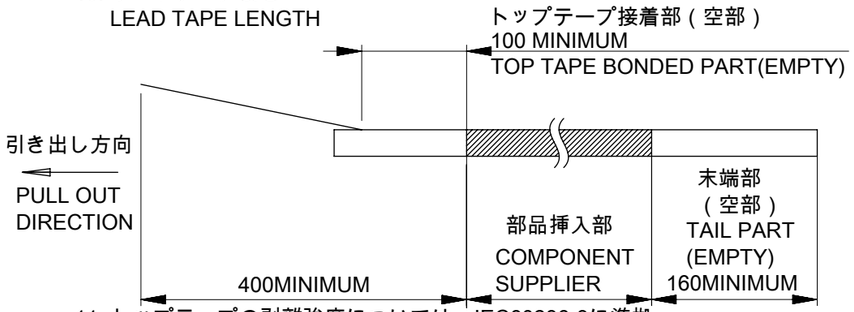

11. トップテープの剥離強度については、IEC60286-3に準拠
    TOP TAPE PEEL FORCE IS DEFINED BY IEC 60286-3.

△1 TABLE 2

番号 NO.	部品 PART	材質 MATERIAL
⑤	エンボステープ EMBOSSED TAPE	ポリスチレン(PS) POLYSTYRENE(PS)
⑥	トップテープ TOP TAPE	ポリエチレン(PE)、その他 POLYETHYLENE(PE), OTHER
⑦	リール REEL	ポリスチレン(PS) < リサイクル材を含む > POLYSTYRENE(PS) < RECYCLE MATERIAL CONTAINED >

DOCUMENT STATUS	P1	RELEASE DATE	2026/02/10　10:00:20

THIS DRAWING CONTAINS INFORMATION THAT IS PROPRIETARY TO MOLEX ELECTRONIC TECHNOLOGIES, LLC AND SHOULD NOT BE USED WITHOUT WRITTEN PERMISSION

DIMENSION UNITS	SCALE
mm	NTS

GENERAL TOLERANCES (UNLESS SPECIFIED)

ANGULAR TOL	±	3.0 °
4 PLACES	±	0.2
3 PLACES	±	0.2
2 PLACES	±	0.2
1 PLACE	±	0.2
0 PLACES	±	0.2

DRAFT WHERE APPLICABLE MUST REMAIN WITHIN DIMENSIONS

CURRENT REV DESC: REMOVED OBSOLETED PART NUMBERS AS PER PCN#516659

EC NO: 844075
DRWN: SAMPRS 2025/12/31
CHK'D: GGA 2026/02/10
APPR: GGA 2026/02/10

INITIAL REVISION:
DRWN: TENAGASE 2020/01/20
APPR: KOMURAKAMI 2020/01/21

THIRD ANGLE PROJECTION	DRAWING	SERIES
	A3-SIZE	505433

molex

MICRO-LOCK PLUS 1.25 W/B
DUAL ROW VERTICAL SMT PLUG ASSEMBLY
GOLD PLATING

PRODUCT CUSTOMER DRAWING

DOCUMENT NUMBER	DOC TYPE	DOC PART	REVISION
5054330003-SD	PSD	000	D1

MATERIAL NUMBER	CUSTOMER	SHEET NUMBER
SEE SHEET 5,6	GENERAL	4 OF 6

FORMAT: master-tb-prod-A3
REVISION: J1
DATE: 2021/05/01

カバーテープ有 WITH COVER TAPE

△6 505433**9*発注番号一覧 ORDER NUMBER LIST

BLUE	RED	BLACK	NATURAL (BEIGE)	HOUSING COLOR
5054334294	5054334292	5054334291	5054334290	42
5054334094	5054334092	5054334091	5054334090	40
5054333894	5054333892	5054333891	5054333890	38
5054333694	5054333692	5054333691	5054333690	36
5054333494	5054333492	5054333491	5054333490	34
5054333294	5054333292	5054333291	5054333290	32
5054333094	5054333092	5054333091	5054333090	30
5054332894	5054332892	5054332891	5054332890	28
5054332694	5054332692	5054332691	5054332690	26
5054332494	5054332492	5054332491	5054332490	24
5054332294	5054332292	5054332291	5054332290	22
5054332094	5054332092	5054332091	5054332090	20
5054331894	5054331892	5054331891	5054331890	18
5054331694	5054331692	5054331691	5054331690	16
5054331494	5054331492	5054331491	5054331490	14
5054331294	5054331292	5054331291	5054331290	12
5054331094	5054331092	5054331091	5054331090	10
5054330894	5054330892	5054330891	5054330890	8
発注番号 ORDER NUMBER				極数 CIRCUIT SIZE
梱包形態：エンボステープ、リール PACKAGING STYLE : EMBOSSED TAPE AND REEL				

△6 505433**5*発注番号一覧 ORDER NUMBER LIST

BLUE	RED	BLACK	NATURAL (BEIGE)	HOUSING COLOR
5054334254	5054334252	5054334251	5054334250	42
5054334054	5054334052	5054334051	5054334050	40
5054333854	5054333852	5054333851	5054333850	38
5054333654	5054333652	5054333651	5054333650	36
5054333454	5054333452	5054333451	5054333450	34
5054333254	5054333252	5054333251	5054333250	32
5054333054	5054333052	5054333051	5054333050	30
5054332854	5054332852	5054332851	5054332850	28
5054332654	5054332652	5054332651	5054332650	26
5054332454	5054332452	5054332451	5054332450	24
5054332254	5054332252	5054332251	5054332250	22
5054332054	5054332052	5054332051	5054332050	20
5054331854	5054331852	5054331851	5054331850	18
5054331654	5054331652	5054331651	5054331650	16
5054331454	5054331452	5054331451	5054331450	14
5054331254	5054331252	5054331251	5054331250	12
5054331054	5054331052	5054331051	5054331050	10
5054330854	5054330852	5054330851	5054330850	8
発注番号 ORDER NUMBER				極数 CIRCUIT SIZE
梱包形態：エンボステープ、リール PACKAGING STYLE : EMBOSSED TAPE AND REEL				

△6 505433**3*発注番号一覧 ORDER NUMBER LIST

BLUE	RED	BLACK	NATURAL (BEIGE)	HOUSING COLOR
5054334234	5054334232	5054334231	5054334230	42
5054334034	5054334032	5054334031	5054334030	40
5054333834	5054333832	5054333831	5054333830	38
5054333634	5054333632	5054333631	5054333630	36
5054333434	5054333432	5054333431	5054333430	34
5054333234	5054333232	5054333231	5054333230	32
5054333034	5054333032	5054333031	5054333030	30
5054332834	5054332832	5054332831	5054332830	28
5054332634	5054332632	5054332631	5054332630	26
5054332434	5054332432	5054332431	5054332430	24
5054332234	5054332232	5054332231	5054332230	22
5054332034	5054332032	5054332031	5054332030	20
5054331834	5054331832	5054331831	5054331830	18
5054331634	5054331632	5054331631	5054331630	16
5054331434	5054331432	5054331431	5054331430	14
5054331234	5054331232	5054331231	5054331230	12
5054331034	5054331032	5054331031	5054331030	10
5054330834	5054330832	5054330831	5054330830	8
発注番号 ORDER NUMBER				極数 CIRCUIT SIZE
梱包形態：エンボステープ、リール PACKAGING STYLE : EMBOSSED TAPE AND REEL				

THIS DRAWING CONTAINS INFORMATION THAT IS PROPRIETARY TO MOLEX ELECTRONIC TECHNOLOGIES, LLC AND SHOULD NOT BE USED WITHOUT WRITTEN PERMISSION

DIMENSION UNITS	SCALE
mm	NTS

GENERAL TOLERANCES (UNLESS SPECIFIED)

ANGULAR TOL	±	3.0 °
4 PLACES	±	0.2
3 PLACES	±	0.2
2 PLACES	±	0.2
1 PLACE	±	0.2
0 PLACES	±	0.2

DRAFT WHERE APPLICABLE MUST REMAIN WITHIN DIMENSIONS

CURRENT REV DESC: REMOVED OBSOLETED PART NUMBERS AS PER PCN#516659

EC NO: 844075
DRWN: SAMPRS 2025/12/31
CHK'D: GGA 2026/02/10
APPR: GGA 2026/02/10

INITIAL REVISION:
DRWN: TENAGASE 2020/01/20
APPR: KOMURAKAMI 2020/01/21

molex

MICRO-LOCK PLUS 1.25 W/B
DUAL ROW VERTICAL SMT PLUG ASSEMBLY
GOLD PLATING

PRODUCT CUSTOMER DRAWING

DOCUMENT NUMBER	DOC TYPE	DOC PART	REVISION
5054330003-SD	PSD	000	D1

THIRD ANGLE PROJECTION	DRAWING	SERIES	MATERIAL NUMBER	CUSTOMER	SHEET NUMBER
	A3-SIZE	505433	SEE SHEET 5,6	GENERAL	5 OF 6

DOCUMENT STATUS	P1	RELEASE DATE	2026/02/10 10:00:20

FORMAT: master-ib-prod-A3
REVISION: J1
DATE: 2021/05/01

カバーテープ無 WITHOUT COVER TAPE

△6 505433**6*発注番号一覧 ORDER NUMBER LIST

BLUE	RED	BLACK	NATURAL (BEIGE)	HOUSING COLOR
5054334264	5054334262	5054334261	5054334260	42
5054334064	5054334062	5054334061	5054334060	40
5054333864	5054333862	5054333861	5054333860	38
5054333664	5054333662	5054333661	5054333660	36
5054333464	5054333462	5054333461	5054333460	34
5054333264	5054333262	5054333261	5054333260	32
5054333064	5054333062	5054333061	5054333060	30
5054332864	5054332862	5054332861	5054332860	28
5054332664	5054332662	5054332661	5054332660	26
5054332464	5054332462	5054332461	5054332460	24
5054332264	5054332262	5054332261	5054332260	22
5054332064	5054332062	5054332061	5054332060	20
5054331864	5054331862	5054331861	5054331860	18
5054331664	5054331662	5054331661	5054331660	16
5054331464	5054331462	5054331461	5054331460	14
5054331264	5054331262	5054331261	5054331260	12
5054331064	5054331062	5054331061	5054331060	10
5054330864	5054330862	5054330861	5054330860	8
発注番号 ORDER NUMBER				極数 CIRCUIT SIZE
梱包形態：エンボステープ、リール PACKAGING STYLE : EMBOSSED TAPE AND REEL				

△6 505433**4*発注番号一覧 ORDER NUMBER LIST

BLUE	RED	BLACK	NATURAL (BEIGE)	HOUSING COLOR
5054334244	5054334242	5054334241	5054334240	42
5054334044	5054334042	5054334041	5054334040	40
5054333844	5054333842	5054333841	5054333840	38
5054333644	5054333642	5054333641	5054333640	36
5054333444	5054333442	5054333441	5054333440	34
5054333244	5054333242	5054333241	5054333240	32
5054333044	5054333042	5054333041	5054333040	30
5054332844	5054332842	5054332841	5054332840	28
5054332644	5054332642	5054332641	5054332640	26
5054332444	5054332442	5054332441	5054332440	24
5054332244	5054332242	5054332241	5054332240	22
5054332044	5054332042	5054332041	5054332040	20
5054331844	5054331842	5054331841	5054331840	18
5054331644	5054331642	5054331641	5054331640	16
5054331444	5054331442	5054331441	5054331440	14
5054331244	5054331242	5054331241	5054331240	12
5054331044	5054331042	5054331041	5054331040	10
5054330844	5054330842	5054330841	5054330840	8
発注番号 ORDER NUMBER				極数 CIRCUIT SIZE
梱包形態：エンボステープ、リール PACKAGING STYLE : EMBOSSED TAPE AND REEL				

△6 505433**2*発注番号一覧 ORDER NUMBER LIST

BLUE	RED	BLACK	NATURAL (BEIGE)	HOUSING COLOR
5054334224	5054334222	5054334221	5054334220	42
5054334024	5054334022	5054334021	5054334020	40
5054333824	5054333822	5054333821	5054333820	38
5054333624	5054333622	5054333621	5054333620	36
5054333424	5054333422	5054333421	5054333420	34
5054333224	5054333222	5054333221	5054333220	32
5054333024	5054333022	5054333021	5054333020	30
5054332824	5054332822	5054332821	5054332820	28
5054332624	5054332622	5054332621	5054332620	26
5054332424	5054332422	5054332421	5054332420	24
5054332224	5054332222	5054332221	5054332220	22
5054332024	5054332022	5054332021	5054332020	20
5054331824	5054331822	5054331821	5054331820	18
5054331624	5054331622	5054331621	5054331620	16
5054331424	5054331422	5054331421	5054331420	14
5054331224	5054331222	5054331221	5054331220	12
5054331024	5054331022	5054331021	5054331020	10
5054330824	5054330822	5054330821	5054330820	8
発注番号 ORDER NUMBER				極数 CIRCUIT SIZE
梱包形態：エンボステープ、リール PACKAGING STYLE : EMBOSSED TAPE AND REEL				

THIS DRAWING CONTAINS INFORMATION THAT IS PROPRIETARY TO MOLEX ELECTRONIC TECHNOLOGIES, LLC AND SHOULD NOT BE USED WITHOUT WRITTEN PERMISSION

DIMENSION UNITS	SCALE
mm	NTS

GENERAL TOLERANCES (UNLESS SPECIFIED)

ANGULAR TOL	±	3.0 °
4 PLACES	±	0.2
3 PLACES	±	0.2
2 PLACES	±	0.2
1 PLACE	±	0.2
0 PLACES	±	0.2

DRAFT WHERE APPLICABLE MUST REMAIN WITHIN DIMENSIONS

CURRENT REV DESC: REMOVED OBSOLETED PART NUMBERS AS PER PCN#516659

EC NO: 844075
DRWN: SAMPRS 2025/12/31
CHK'D: GGA 2026/02/10
APPR: GGA 2026/02/10

INITIAL REVISION:
DRWN: TENAGASE 2020/01/20
APPR: KOMURAKAMI 2020/01/21

molex

MICRO-LOCK PLUS 1.25 W/B
DUAL ROW VERTICAL SMT PLUG ASSEMBLY
GOLD PLATING

PRODUCT CUSTOMER DRAWING

DOCUMENT NUMBER	DOC TYPE	DOC PART	REVISION
5054330003-SD	PSD	000	D1

THIRD ANGLE PROJECTION	DRAWING	SERIES	MATERIAL NUMBER	CUSTOMER	SHEET NUMBER
	A3-SIZE	505433	SEE SHEET 5,6	GENERAL	6 OF 6

DOCUMENT STATUS	P1	RELEASE DATE	2026/02/10 10:00:20

FORMAT: master-ib-prod-A3
REVISION: J1
DATE: 2021/05/01