

钍地半导体
Tudi Semiconductor

Product Specification

TUDI-ADT75

±1°C Accurate, 12-Bit Digital Temperature Sensor

网址 www.sztdbdt.com

用芯智造·卓越品质

semiconductor device manufacturer

- Design
- research and development
- production
- and sales

FEATURES

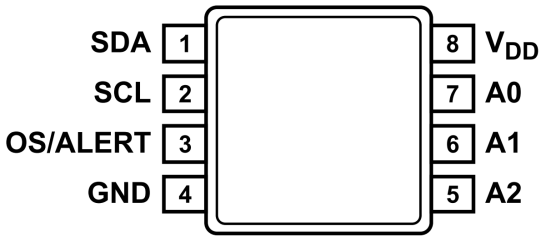

SOP8/MSOP8

- 12-bit temperature-to-digital converter
- B grade accuracy ±1.0°C from 0°C to 70°C
- A grade accuracy ±2.0°C from ?25°C to +100°C
- SMBus/I_2C-compatible interface
- Operation from -55°C to +125°C
- Operation from 2.7 V to 5.5 V
- Overtemperature indicator
- Shutdown mode for low power consumption
- Power consumption 79 µW typically at 3.3 V
- Small, low cost 8-lead MSOP in Pb-Sn and Pb-free packages
- Standard 8-lead SOIC Pb-free package

DESCRIPTION

The ADT75 is a complete temperature monitoring system in 8-lead MSOP and SOIC packages. It contains a band gap temperature sensor and a 12-bit analog-to-digital converter (ADC) to monitor and digitize the temperature to a resolution of 0.0625°C. The ADT75 is pin and register compatible with the LM75 and AD7416. The ADT75 is guaranteed to operate at supply voltages from 2.7 V to 5.5 V. Operating at 3.3 V, the average supply current is typically 200 µA. The ADT75 offers a shutdown mode that powers down the device, and this mode gives a shutdown current of typically 3 µA. The ADT75 is rated for operation over the -55°C to +125°C temperature range. The A0, A1, and A2 pins are available for address selection. The OS/ALERT pin is an open-drain output that becomes active when temperature exceeds a programmable limit. The OS/ALERT pin can operate in either comparator or interrupt mode.

APPLICATIONS

- Isolated sensors
- Environmental control systems
- Computer thermal monitoring
- Thermal protection
- Industrial process control
- Power-system monitors
- Hand-held applications

FUNCTIONAL BLOCK DIAGRAM

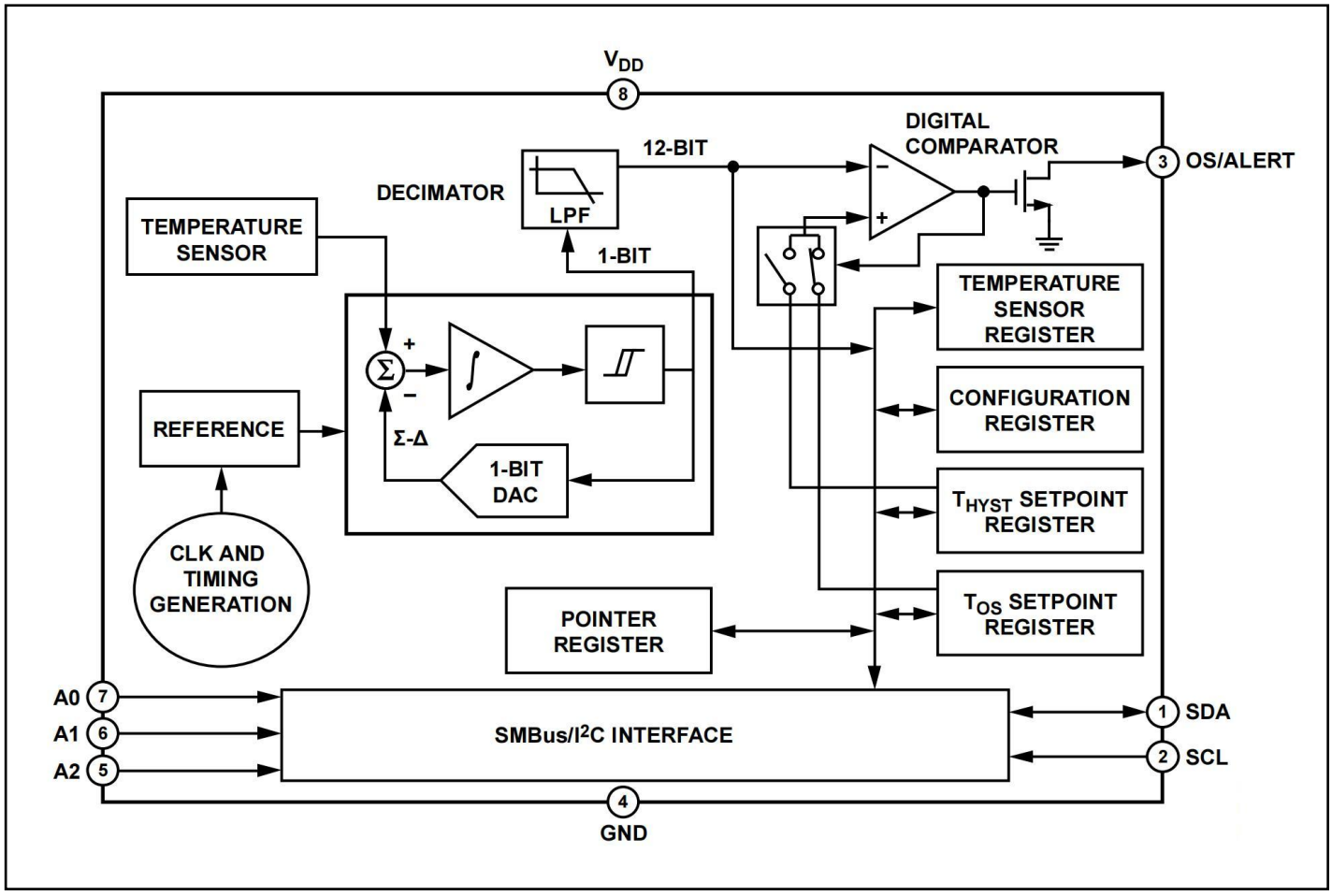

Figure 1.

SPECIFICATIONS A GRADE

$T_A = T_{MIN}$ to T_{MAX}, V_{DD} = 2.7 V to 5.5 V. All specifications for -55°C to +125°C, unless otherwise noted.

Table 1.

Parameter	Min	Typ	Max	Unit	Test Conditions/Comments
TEMPERATURE SENSOR AND ADC					
Accuracy at V_{DD}=2.7V to 5.5V			±2	℃	T_A=-25℃ to+100℃
			±3	℃	T_A=-55℃to+100℃
Accuracy at V_{DD}=2.7V to 3.6V			±3	℃	T_A=100℃to 125℃
Accuracy at V_{DD}=4.5V to 5.5V		±2		℃	T_A=100℃ to 125℃
ADC Resolution		12		Bits	
Temperature Resolution		0.0625		℃	
Temperature Conversion Time		60		ms	
Update Rate		100		ms	Conversion started every 100 ms
Long Term Drift		0.08		℃	Drift over 10 years,if part is operated at 55℃
Temperature Hysteresis		0.03		℃	Temperature cycle=25℃to 125℃ to 25℃
OS/ALERT OUTPUT (OPEN DRAIN)					
Output Low Voltage,V_{OL}			0.4	V	I_{OL}=3mA
Pin Capacitance		10		pF	
High Output Leakage Current, I_{OH}		0.1	5	μA	OS/ALERT pin pulled upto 5.5V
R_{ON} Resistance (Low Output)		15		Ω	Supply and temperature dependent
DIGITAL INPUTS					
Input Current			± 1	μA	V_{IN}=0V to V_{DD}
Input Low Voltage,VIL			0.3×V_{DD}	V	
Input High Voltage,VIH	0.7×V_{DD}			V	
SCL,SDA Glitch Rejection			50	ns	Input filtering suppresses noise spikes of less than 50 ns
Pin Capacitance	3		10	pF	

Table 1.Continued

Parameter	Min	Typ	Max	Unit	Test Conditions/Comments
DIGITAL OUTPUT(OPENDRAIN)					
Output High Current,I_{OH}			1	mA	V_{OH}=5V
Output Low Voltage,V_{OL}			0.4	V	I_{OL}=3mA
Output High Voltage,V_{OH}	0.7×V_{DD}			V	
Output Capacitance,C_{OUT}	3		10	pF	
POWER REQUIREMENTS					
Supply Voltage	2.7		5.5	V	
Supply Current at 3.3V		350	500	μA	Peak current while converting and PCinterface inactive
Supply Current at 5.0V		380	525	μA	Peak current while converting and I²C interface inactive
Average Current at 3.3V		200		μA	Part converting and I²C interface inactive
Average Current at 5.0V		225		μA	Part converting and I²C interface inactive
Shutdown Mode at 3.3V		3	8	μA	Supply current in shutdown mode
Shutdown Mode at 5.0V		5.5	12	μA	Supply current in shutdown mode
Average Power Dissipation		798.6		μW	V_{DD}=3.3V,normal mode at 25℃
1 SPS		78.6		μW	Average power dissipated for V_{DD}= 3.3V,shutdown mode at 25℃
		140		μW	Average power dissipated for V_{DD}= 5.0V,shutdown mode at 25℃

B GRADE

T_A = T_{MIN} to T_{MAX}, V_{DD} = 2.7 V to 5.5 V. All specifications for -55°C to +125°C, unless otherwise noted.
Table 2.

Parameter	Min	Typ	Max	Unit	Test Conditions/Comments
TEMPERATURE SENSOR AND ADC					
Accuracy at V_{DD}=2.7V to 5.5V			± 1	°C	T_A=0°C to+70°C
			±2	°C	T_A=-25°C to+100°C
			±3	°C	T_A=-55°Cto+100°C
Accuracy at V_{DD}=2.7V to 3.6V			±3	°C	T_A=100°Cto 125°C
Accuracy at V_{DD}=4.5V to 5.5V		±2		°C	T_A=100°Cto 125°C
ADC Resolution		12		bits	
Temperature Resolution		0.0625		°C	
Temperature Conversion Time		60		ms	
Update Rate		100		ms	Conversion started every 100 ms
Long Term Drift		0.08		°C	Drift over 10 years,if part is operated at 55°C
Temperature Hysteresis		0.03		°C	Temperature cycle=25°C to 125°C to 25 °C
OS/ALERT OUTPUT (OPEN DRAIN)					
Output Low Voltage,V_{OL}			0.4	V	I_{OL}=3mA
Pin Capacitance		10		pF	
High Output Leakage Current,I_{OH}		0.1	5	µA	OS/ALERT pin pulled up to 5.5V
RonResistance (Low Output)		15		Ω	Supply and temperature dependent
DIGITAL INPUTS					
Input Current			± 1	µA	V_{IN}=0V to V_{DD}
Input Low Voltage,V_{IL}			0.3×V_{DD}	V	
Input High Voltage,V_{IH}	0.7×V_{DD}			V	
SCL,SDA Glitch Rejection			50	ns	Input filtering suppresses noise spikes of less than 50 ns
Pin Capacitance	3		10	pF	

Table 2.Continued

Parameter	Min	Typ	Max	Unit	Test Conditions/Comments
DIGITAL OUTPUT (OPENDRAIN)					
Output High Current,I_{OH}			1	mA	V_{OH}=5V
Output Low Voltage,V_{OL}			0.4	V	I_{OL}=3mA
Output High Voltage,V_{OH}	0.7×V_{DD}			V	
Output Capacitance,C_{OUT}	3		10	pF	
POWER REQUIREMENTS					
Supply Voltage	2.7		5.5	V	
Supply Current at 3.3V		350	500	μA	Peak current while converting and I²C interface inactive
Supply Current at 5.0V		380	525	μA	Peak current while converting and I²C interface inactive
Average Current at 3.3V		200		μA	Part converting and I²C interface inactive
Average Current at 5.0V		225		μA	Part converting and I²C interface inactive
Shutdown Mode at 3.3V		3	8	μA	Supply current in shutdown mode
Shutdown Mode at 5.0V		5.5	12	μA	Supply current in shutdown mode
Average Power Dissipation		798.6		μ W	V_{DD}=3.3V,normal mode at 25℃
1 SPS		78.6		μ W	Average power dissipated for V_{DD}=3.3V, shutdown mode at 25℃
		140		μ W	Average power dissipated for V_{DD}=5.0V, shutdown mode at 25℃

TIMING SPECIFICATIONS AND DIAGRAM

Measure the SDA and SCL timing with the input filters turned on to meet the fast mode I²C specification. Switching off the input filters improves the transfer rate but has a negative effect on the EMC behavior of the part.

$T_A = T_{MIN}$ to T_{MAX}, V_{DD} = 2.7 V to 5.5 V, unless otherwise noted.

Table 3.

Parameter[1]	Min	Typ	Max	Unit	Test Conditions/Comments
Serial Clock Period,t_1	2.5			μs	Fast mode I²C.See Figure 2
Data In Setup Time to SCL High,t_2	50			ns	See Figure 2
Data Out Stable After SCL Low,t_3	0		0.9	ns	Fast mode I²C.See Figure 2

Table 3. Continued

Parameter[1]	Min	Typ	Max	Unit	Test Conditions/ Comments
Data Out Stable After SCL Low,t_3	0		3.45[2]	μs	Standard mode I²C.See Figure 2
SDA Low Setup Time to SCLLow(Start Condition),t_4	50			ns	See Figure 2
SDA High Hold Time After SCL High (Stop Condition),t_5	50			ns	See Figure 2
SDA and SCL Rise Time,t_6			300	ns	Fast mode I²C.See Figure 2
SDA and SCL Rise Time,t_6			1000	ns	Standard mode I²C.See Figure 2
SDA and SCL Fall Time,t_7			300	ns	See Figure 2
Capacitive Load for each Bus Line,C_B			400	pF	

1 Guaranteed by design and characterization; not production tested.
2 This time has to be met only if the master does not stretch the low period of the SCL signal

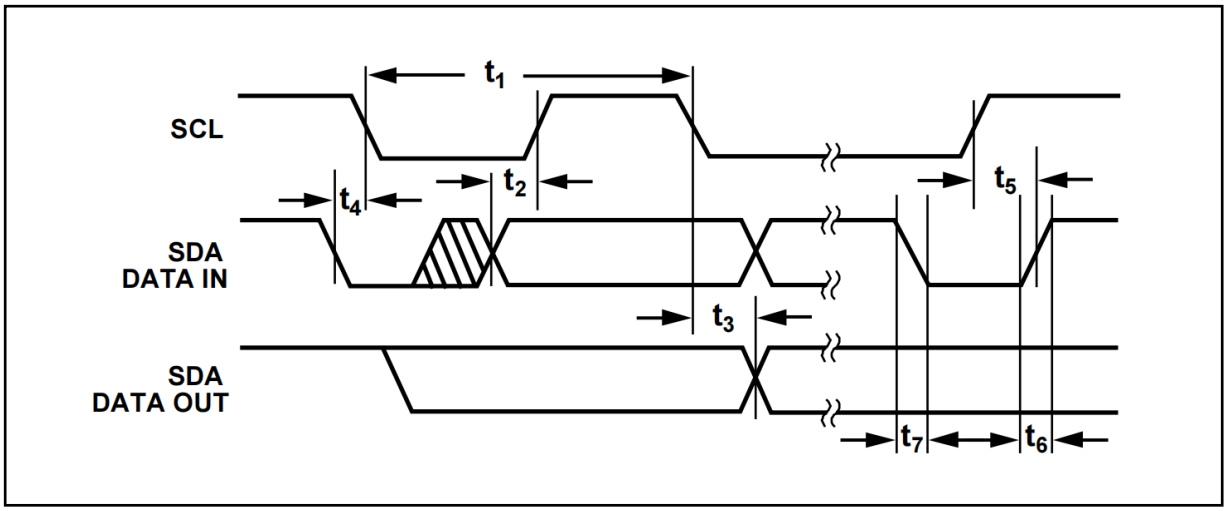

Figure 2. SMBus/I²C Timing Diagram

ABSOLUTE MAXIMUM RATINGS

Table 4.

Parameter	Rating
V_{DD} to GND	-0.3V to+7V
SDA Input Voltage to GND	-0.3V to V_{DD}+0.3V
SDA Output Voltage to GND	-0.3V to V_{DD}+0.3V
SCL Input Voltage to GND	-0.3V to V_{DD}+0.3V
OS/ALERT Output Voltage to GND	-0.3V to V_{DD}+0.3V
Operating Temperature Range	-55℃ to +150℃
Storage Temperature Range	-65℃ to +160℃
Maximum Junction Temperature, T_{JMAX}	150.7℃
8-Lead MSOP(RM-8)	
Power Dissipation[1,2]	$W_{MAX}=(T_{JMAX}-T_A)/\theta_{JA}$
Thermal Impedance[3]	
θ_{JA},Junction-to-Ambient (StillAir)	205.9℃/W
θ_{Jc} Junction-to-Case	43.74℃/W
8-Lead SOIC(R-8)	
Power Dissipation[1,2]	$W_{MAX}=(T_{JMAX}-T_A/\theta_{JA}$
Thermal Impedance[3]	
θ_{JA},Junction-to-Ambient(Still Air)	157℃/W
θ_{JC} Junction-to-Case	56℃/W
IR Reflow Soldering	
Peak Temperature	220℃(0℃/5℃)
Time at Peak Temperature	10 sec to 20 sec
Ramp-Up Rate	3℃/sec maximum
Ramp-Down Rate	-6℃/sec maximum
Time 25℃ to Peak Temperature	6 minutes maximum
IR Reflow Soldering(Pb-Free Package)	
Peak Temperature	260℃(+0℃)
Time at Peak Temperature	20 sec to 40 sec
Ramp-Up Rate	3℃/sec maximum
Ramp-Down Rate	-6℃/sec maximum
Time 25℃ to Peak Temperature	8 minutes maximum

1 Values relate to package being used on a standard 2-layer PCB. This gives a worst case θ_{JA} and θ_{JC}. Refer to Figure 3 for a plot of maximum power dissipation vs. ambient temperature (T_A).
2 T_A = ambient temperature.
3 Junction-to-case resistance is applicable to components featuring a preferential flow direction, for example, components mounted on a heat sink. Junction-to-ambient resistance is more useful for air-cooled, PCB mounted components.

Table 5. Pin Function Descriptions

Pin No.	Mnemonic	Description
1	SDA	SMBus/I²C Serial Data Input/Output.Serial data that is loaded into and read from the ADT75 registers is providedon this pin.Open-drain configuration; needs a pull-up resistor.
2	SCL	Serial ClockInput.This is the clock input for the serial port.The serial clock is used to clock in and clock out data toand from any register of the ADT75.Open-drain configuration;needs a pull-up resistor.
3	OS/ALERT	Over-and Undertemperature Indicator.Default power as an OS pin.Open-drain configuration;needs apullup resistor.
4	GND	Analog and Digital Ground.
5	A2	SMBus/I²C Serial Bus Address Selection Pin.Logicinput.Can be set to GND or V_{DD}
6	A1	SMBus/²C Serial Bus Address Selection Pin.Logicinput.Can be set to GND orV_{DD}
7	A0	SMBus/I²C Serial Bus Address Selection Pin.Logicinput.Can be set to GND or V_{DD}
8	V_{DD}	Positive Supply Voltage,2.7V to 5.5V.Decouple the supply to ground.

THEORY OF OPERATION
CIRCUIT INFORMATION

The ADT75 is a 12-bit digital temperature sensor with the 12th bit acting as the sign bit. An on-board temperature sensor generates a voltage precisely proportional to absolute temperature that is compared to an internal voltage reference and input to a precision digital modulator. Overall accuracy for the ADT75 A Grade is ±2°C from -25°C to +100°C and accuracy for the ADT75 B Grade is ±1°C from 0°C to +70°C. Both grades have excellent transducer linearity. The serial interface is SMBus /I2C- compatible and the open-drain output of the ADT75 is capable of sinking 3 mA. The on-board temperature sensor has excellent accuracy and linearity over the entire rated temperature range without needing correction or calibration by the user. The sensor output is digitized by a first-order Σ-Δ modulator, also known as the charge balance type ADC. This type of converter uses time-domain oversampling and a high accuracy comparator to deliver 12 bits of effective accuracy in an extremely compact circuit.

CONVERTER DETAILS

The ∑-Δ modulat or consists of an input sampler, a summing network, an integrator, a comparat or, and a 1-bit DAC. Similar to the voltage-to-frequency converter, this architecture creates a neg ative feedback loop and minimizes the integrator output by changing the duty cycle of the comp arator output in response to input voltage changes. The comparator samples the output of the i ntegrator at a much higher rate than the input sampling frequency; this is called oversampling. O versampling spreads the quantization noise over a much wider band than that of the input signal, improving overall noise performance and increasing accuracy.

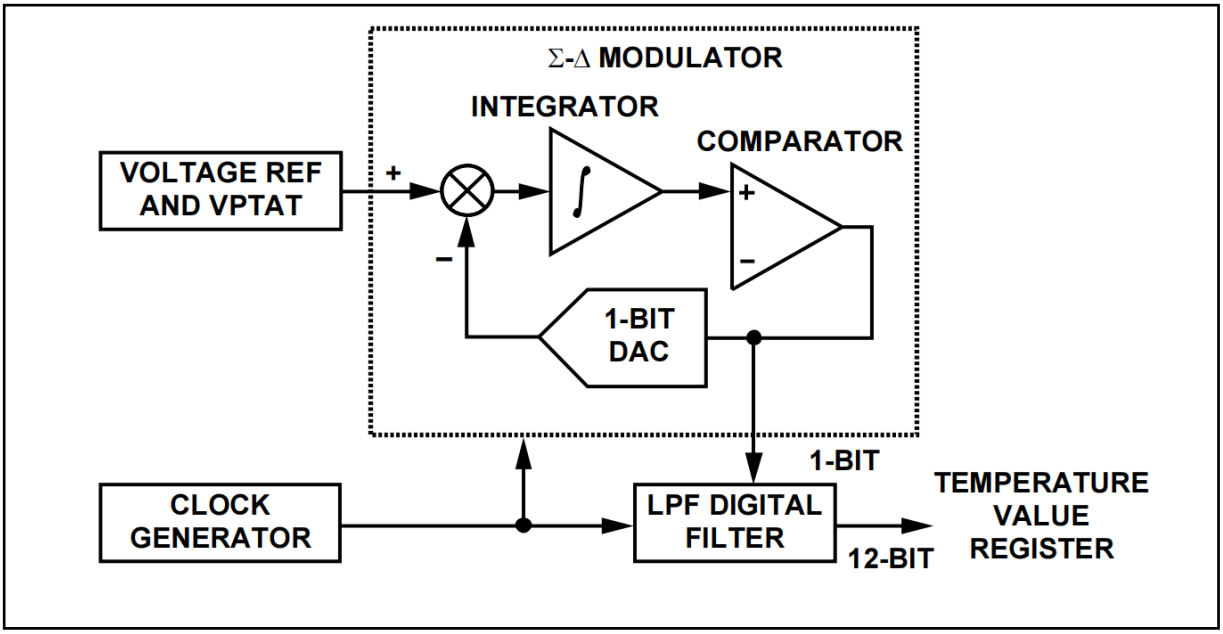

Figure 3. First-Order Σ-Δ Modulator

The modulated output of the comparator is encoded using a circuit technique that results in SMBus/I^2C temperature data.

FUNCTIONAL DESCRIPTION

The conversion clock for the part is generated internally. No external clock is required except when reading from and writing to the serial port. In normal mode, the internal clock oscillator runs an automatic conversion sequence. During this automatic conversion sequence, a conversion is initiated every 100 ms. At this time, the part powers up its analog circuitry and performs a temperature conversion.

This temperature conversion typically takes 60 ms, after which time the analog circuitry of the part automatically shuts down. The analog circuitry powers up again 40 ms later, when the 100 ms timer times out and the next conversion begins. The result of the most recent temperature conversion is always available in the temperature value register because the SMBus/I^2C circuitry never shuts down.

The ADT75 can be placed in shutdown mode via the configuration register, in which case the on-chip oscillator is shut down and no further conversions are initiated until the ADT75 is taken out of shutdown mode. The ADT75 can be taken out of shutdown mode by writing 0 to Bit D0 in the configuration register. The ADT75 typically takes 1.7 ms to come out of shutdown mode. The conversion result from the last conversion prior to shutdown can still be read from the ADT75 even when it is in shutdown mode.

In normal conversion mode, the internal clock oscillator is reset after every read or write operation . This causes the device to start a temperature conversion, the result of which is typically available 60 ms later. Similarly, when the part is taken out of shutdown mode, the internal clock oscillator is started and a conversion is initiated.

The conversion result is typically available 60 ms later. Reading from the device before a conversion is complete causes the ADT75 to stop converting; the part starts again when serial communication is finished. This read operation provides the previous conversion result.

The measured temperature value is compared with a high temperature limit, stored in the 16-bit T_{OS} read/write register and the hysteresis temperature limit, stored in the 16-bit T_{HYST} read/write register. If the measured value exceeds these limits then the OS/ALERT pin is activated. This OS/ALERT pin is programmable for mode and polarity via the configuration register.

Configuration register functions consist of

- Switching between normal operation and full power-down.
- Switching between comparator and interrupt event modes.
- Setting the OS/ALERT pin active polarity.
- Setting the number of faults that activate the OS/ALERT pin.
- Enabling the one-shot mode.
- Enabling the SMBu

TEMPERATURE DATA FORMAT

One LSB of the ADC corresponds to 0.0625°C. The ADC can theoretically measure a temperature range of 255°C (-128°C to +127°C), but the ADT75 is guaranteed to measure a low value temperature limit of -55°C to a high value temperature limit of +125°C. The temperature measurement result is stored in the 16-bit temperature value register and is compared with the high temperature limit stored in the T_{OS} setpoint register and the hysteresis limit in the T_{HYST} setpoint register.

Temperature data in the temperature value register, the T_{OS} setpoint register and the T_{HYST} setpoint register, is represented by a 12-bit twos complement word. The MSB is the temperature sign bit. The four LSBs, Bit DB0 to Bit DB3, are not part of the temperature conversion result and are always 0s. Table 6 shows the temperature data format without Bit DB0 to Bit DB3.

Reading back the temperature from the temperature value register requires a 2-byte read unless only a 1°C (8-bit) resolution is required, then a 1-byte read is required. Designers that use a 9-bit temperature data format can still use the ADT75 by ignoring the last three LSBs of the 12-bit temperature value. These three LSBs are Bit D4 to Bit D6 in Table 6.

Table 6. 12-Bit Temperature Data Format

Temperature	Digital Output(Binary)DB15 to DB4	Digital Output(Hex)
-55℃	110010010000	0xC90
-50℃	110011100000	0xCEO
-25℃	111001110000	0xE70
-0.0625℃	111111111111	0xFFF
0℃	000000000000	0x000
+0.0625℃	000000000001	0x001
+10℃	000010100000	0x0A0
+25℃	000110010000	0x190
+50℃	001100100000	0x320
+75℃	010010110000	0x4B0
+100℃	011001000000	0x640
+125℃	011111010000	0x7D0

Temperature Conversion Formulas
12-Bit Temperature Data Format

- Positive Temperature = ADC Code(d)/16
- Negative Temperature = (ADC Code(d)[1] - 4096)/16, or
  Negative Temperature = (ADC Code(d)[2] – 2048)/16

9-Bit Temperature Data Format

- Positive Temperature = ADC Code(d)/2
- Negative Temperature = (ADC Code(d)[3] – 512)/2, or
  Negative Temperature = (ADC Code(d)[4] – 256)/2

8-Bit Temperature Data Format

- Positive Temperature = ADC Code(d)
- Negative Temperature = ADC Code(d)[5] – 256, or
  Negative Temperature = ADC Code(d)[6] – 128
  Bit DB7 (sign bit) is removed from the ADC code.

1 For ADC code, use all 12 bits of the data byte, including the sign bit.
2 For ADC code, Bit DB11 (sign bit) is removed from the ADC code.
3 For ADC code, use all 9 bits of the data byte, including the sign bit.
4 Bit DB8 (sign bit) is removed from the ADC code.
5 For the ADC code, use all 8 bits of the data byte, including the sign bit.
6 Bit DB7 (sign bit) is removed from the ADC code.

ONE-SHOT MODE

Setting Bit D5 of the configuration register enables the one-shot mode. When this mode is enabled, the ADT75 goes immediately into shutdown mode and the current consumption is reduced to typically 3 µA when V_{DD} is 3.3 V and 5.5 µA when V_{DD} is 5 V. A one-shot temperature measurement is initiated when Address 0x04 is written to the address pointer register, which is writing to the one-shot register. The ADT75 powers up, does a temperature conversion, and powers down again.
Wait for a minimum of 60 ms after writing to the one-shot register before reading back the temperature. This time ensures the ADT75 has time to power up and do a conversion. Reading back from the one-shot register, Address 0x04, gives the resultant temperature conversion. Reading from the temperature value register also gives the same temperature value.
When either of the overtemperature detection modes is selected, a write to the one-shot register, Address 0x04, causes the OS/ALERT pin to go active if the temperature exceeds the overtemperature limits. Refer to Figure 4 for more information on one-shot OS/ALERT pin operation.

Note: In the interrupt mode, a read from any register resets the OS/ALERT pin after it is activated by a write to the one-shot register. In the comparator mode, once the temperature drops below the value in the T_{HYST} register, a write to the one-shot register resets the OS/ALERT pin. The one-shot mode is useful when one of the circuit design priorities is to reduce power consumption.

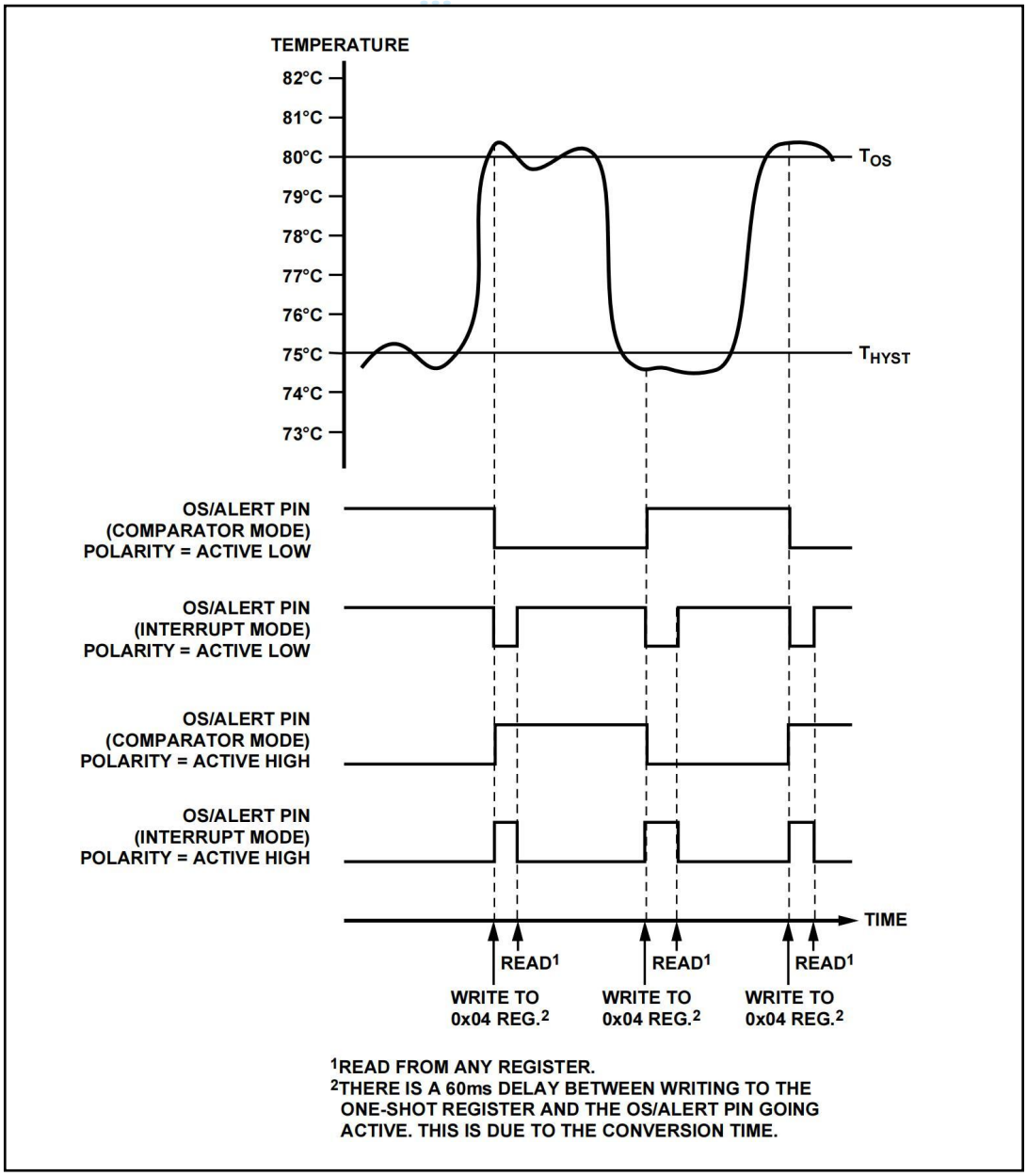

Figure 4. One-Shot OS/ALERT Pin Operation

FAULT QUEUE

Bit D3 and Bit D4 of the configuration register are used to set up a fault queue. Up to six faults are provided to prevent false tripping of the OS/ALERT pin when the ADT75 is used in a noisy temperature environment. The number of faults set in the queue must occur consecutivelyto set the OS/ALERT output.

REGISTERS

The ADT75 contains six registers: four are data registers, one is the address pointer register, and the final register is the one-shot register. The configuration register is the only data register that is 8 bits wide while the rest are 16 bits wide. The temperature value register is the only data register that is read only. Both a read and write can be performed on the rest of the data registers and on the one-shot register. On power-up, the address pointer register is loaded with 0x00 and points to the temperature value register.

Table 7. ADT75 Registers

Pointer Address	Name	Power-On Default
0x00	Temperature value	0x00
0x01	Configuration	0x00
0x02	T_{HYST} setpoint	0x4B00(75°C)
0x03	T_{OS} setpoint	0x5000(80°C)
0x04	One-shot	0xXX

Address Pointer Register

This 8-bit write only register stores an address that points to one of the four data registers and selects the one-shot mode. P0 and P1 select the data register to which subsequent data bytes are written to or read from. P0, P1, and P2 are used to select the one-shot mode by writing 04h to this register. A zero should be written to the rest of the bits.

Table 8. Address Pointer Register

	P7	P6	P5	P4	P3	P2	P1	P0
Default Settings at Power-Up	0	0	0	0	0	0	0	0

Table 9. Register Addresses

P2	P1	PO	Register Selected
0	0	0	Temperature value
0	0	1	Configuration
0	1	0	T_{HVST} setpoint
0	1	1	T_{OS}setpoint
1	0	0	One-shot mode

Temperature Value Register

This 16-bit read only register stores the temperature measured by the internal temperature sensor. The temperature is stored in twos complement format with the MSB being the temperature sign bit. When reading from this register, the eight MSBs (Bit D15 to Bit D8) are read first and then the eight LSBs (Bit D7 to Bit D0) are read. The control register settings are the default settings on power up.

Configuration Register

This 8-bit read/write register stores various configuration modes for the ADT75. These modes are shutdown, overtemperature interrupt, one-shot, SMBus alert function enable, OS/ALERT pin polarity, and overtemperature fault queues. See Table 10.

MSB **LSB**

D15	D14	D13	D12	D11	D10	D9	D8	D7	D6	D5	D4	D3	D2	D1	D0
0	0	0	0	0	0	0	0	0	0	0	0	N/A[1]	N/A[1]	N/A[1]	N/A[1]

[1] N/A = not applicable.

Table 10.

Bit	Configuration Mode	Default Setting at Power-Up
D7	OS/SMBus alert	0
D6	Reserved	0
D5	One-shot	0
D4	Fault queue	0
D3	Fault queue	0
D2	OS/ALERT pin polarity	0
D[1]	Cmp/Int	0
D0	Shutdown	0

Table 11.

Bit	Function	
D0 Shutdown	Shutdown Bit.Setting this bit to 1 puts the ADT75 into shutdown mode.All circuitry except the SMBus/PCinterface is powereddown.To power up the part again,write O to this bit.	
D1 Cmp/Int	This bit selects between comparator and interrupt mode.	
	D1	**Over Temperature Interrupt Modes**
	01	Comparator modeInterrupt mode
D2 OS/ALERT	This bit selects the output polarity of the OS/ALERT pin.	
	D2	**OS/ALERT Pin Polarity**
	01	Active lowActive high
D4:D3 Fault Queue	These two bits set the number of overtemperature faults that occur before setting the OS/ALERT pin.This helps to avoid falsetriggering due to temperature noise.	
	D[4:3]	**Overtemperature Fault Queue**
	00 01 10 11	1 fault(default) 2 faults 4 faults 6 faults
D5 One-Shot	One-shot Mode.Setting this bit puts the part into one-shot mode.In this mode,the part is normally powered down until a0x04 is written to the address pointer register;then a conversion is performed,and the part returns to power down.	
	D5	**One-Shot Mode**
	0 1	Normal mode;powered up and converting every 100 msOne-shot mode
D6 Reserved	Reserved.Write 0 to this bit.	
D7 OS/SMBus Alert Mode	Interrupt Mode Only.Enable SMBus alert function mode.This bit can enable the ADT75 to support the SMBus alert function when the interrupt mode is selected(D1=1).	
	D7	**OS/SMBus Alert Mode**
	0 1	Disable SMBus alert function.The OS/ALERT pin behaves as an OS pin when this bit status is selected.Enable SMBus alert function.

T_{HYST} Setpoint Register

This 16-bit read/write register stores the temperature hysteresis limit for the two interrupt modes. The temperature limit is stored in twos complement format with the MSB being the temperature sign bit. When reading from this register the eight MSBs are read first and then the eight LSBs are read. The default setting has the T_{HYST} limit at 75°C. The control register settings are the default settings on power up.

MSB LSB

D15	D14	D13	D12	D11	D10	D9	D8	D7	D6	D5	D4	D3	D2	D1	D0
0	1	0	0	1	0	1	1	0	0	0	0	N/A[1]	N/A[1]	N/A[1]	N/A[1]

[1] N/A = not applicable

T_{OS} Setpoint Register

This 16-bit read/write register stores the overtemperature limit value for the two interrupt modes. The temperature limit is stored in twos complement format with the MSB being the temperature sign bit. When reading from this register, the eight MSBs are read first and then the eight LSBs are read. The default setting has the T_{OS} limit at 80°C. The control register settings are the default settings on power up.

MSB LSB

D15	D14	D13	D12	D11	D10	D9	D8	D7	D6	D5	D4	D3	D2	D1	D0
0	1	0	0	1	0	1	1	0	0	0	0	N/A[1]	N/A[1]	N/A[1]	N/A[1]

[1] N/A = not applicable.

SERIAL INTERFACE

Control of the ADT75 is carried out via the SMBus/I^2C-compatible serial interface. The ADT75 is connected to this bus as a slave and is under the control of a master device. Figure 5 shows a typical SMBus/I^2C interface connection.

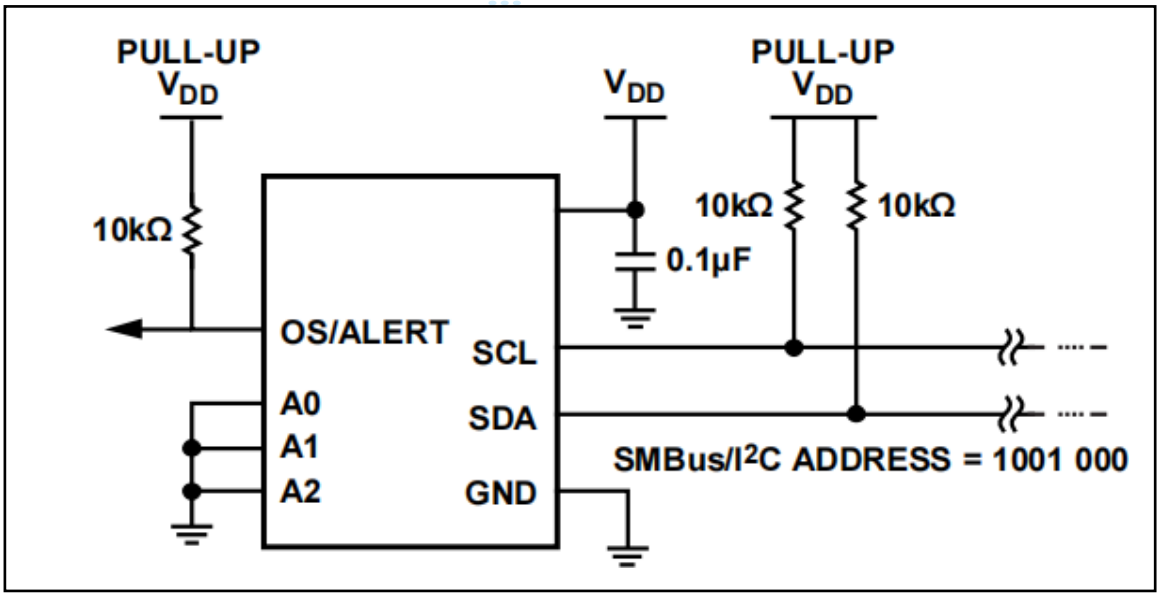

Figure 5. Typical SMBus/I^{2}C Interface Connection

Serial Bus Address

Like all SMBus/I^{2}C-compatible devices, the ADT75 has a 7-bit serial address. The four MSBs of this address for the ADT75 are set to 1001. Pin A2, Pin A1, and Pin A0 set the three LSBs. These pins can be configured two ways, low and high, to give eight different address options. Table 12 shows the different bus address options available. Recommended pull-up resistor value on the SDA and SCL lines is 10 kΩ.

Table 12. SMBus/I^{2}C Bus Address Options

Binary							Hex
A6	A5	A4	A3	A2	A1	A0	
1	0	0	1	0	0	0	0x48
1	0	0	1	0	0	1	0x49
1	0	0	1	0	1	0	0x4A
1	0	0	1	0	1	1	0x4B
1	0	0	1	1	0	0	0x4C
1	0	0	1	1	0	1	0x4D
1	0	0	1	1	1	0	0x4E
1	0	0	1	1	1	1	0x4F

The ADT75 is designed with a SMBus/I$_2$C timeout. The SMBus/I^{2}C interface times out after 75 ms to 325 ms of no activity on the SDA line. After this timeout, the ADT75 resets the SDA line back to its idle state (SDA set to high impedance) and wait for the next start condition.

The serial bus protocol operates as follows:
1. The master initiates data transfer by establishing a start condition, defined as a high to low transition on the serial data line SDA, while the serial clock line SCL remains high. This indicates that an address/data stream is going to follow. All slave peripherals connected to the serial bus respond to the start condition and shift in the next eight bits, consisting of a 7-bit address (MSB first) plus a read/write (R/W) bit. The R/W bit determines whether data is written to, or read from, the slave device.
2. The peripheral with the address corresponding to the transmitted address responds by pulling the data line low during the low period before the ninth clock pulse, known as the acknowledge bit. All other devices on the bus now remain idle while the selected device waits for data to be read from or written to it. If the R/W bit is a zero then the master writes to the slave device. If the R/W bit is a one then the master reads from the slave device.
3. Data is sent over the serial bus in sequences of nine clock pulses, eight bits of data followed by an acknowledge bit from the receiver of data. Transitions on the data line must occur during the low period of the clock signal and remain stable during the high period, as a low to high transition when the clock is high can be interpreted as a stop signal.
4. When all data bytes have been read or written, stop conditions are established. In write mode, the master pulls the data line high during the 10_{th} clock pulse to assert a stop condition. In read mode, the master device pulls the data line high during the low period before the ninth clock pulse. This is known as no acknowledge. The master takes the data line low during the low period before the 10_{th} clock pulse, then high during the 10_{th} clock pulse to assert a stop condition. Any number of bytes of data can be transferred over the serial bus in one operation. However, it is not possible to mix read and write in one operation because the type of operation is determined at the beginning and cannot subsequently be changed without starting a new operation. The I^2C address set up by the three address pins is not latched by the device until after this address has been sent twice. On the eighth SCL cycle of the second valid communication, the serial bus address is latched in. This is the SCL cycle directly after the device has seen its own I^2C serial bus address. Any subsequent changes on this pin has no effect on the I^2C serial bus address.

WRITING DATA

Depending on the register being written to, there are two different writes for the ADT75.

Writing to the Address Pointer Register for a Subsequent Read

To read data from a particular register, the address pointer register must contain the address of that register. If it does not, the correct address must be written to the address pointer register by performing a single-byte write operation, as shown in Figure 6. The write operation consists of the serial bus address followed by the address pointer byte. No data is written to any of the data registers. A read operation is then performed to read the register.

Writing Data to a Register

The configuration register is 8-bits wide so only one byte of data can be written to this register. Writing a single byte of data to the configuration register consists of the serial bus address, the data register address written to the address pointer register, followed by the data byte written to the selected data register. This is shown in Figure 7. The T_{HYST} register and the T_{OS} register are each 16-bits wide, so two data bytes can be written into these registers. Writing two bytes of data to either one of these registers consists of the serial bus address, the data register address written to the address pointer register, followed by the two data bytes written to the selected data register. This is shown in Figure 8. If more than the required number of data bytes is written to a register then the register ignores these extra data bytes. To write to a different register, another start or repeated start is required.

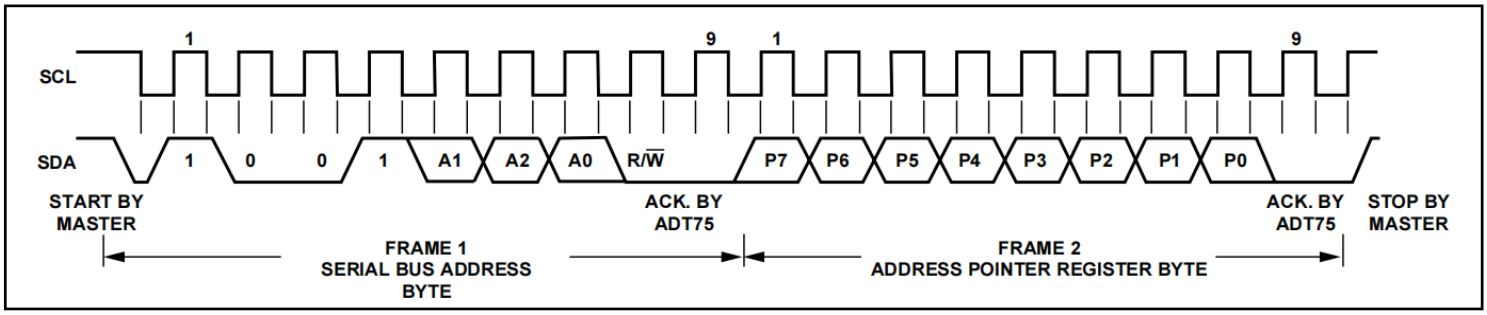

Figure 6. Writing to the Address Pointer Register to Select a Register for a Subsequent Read Operation

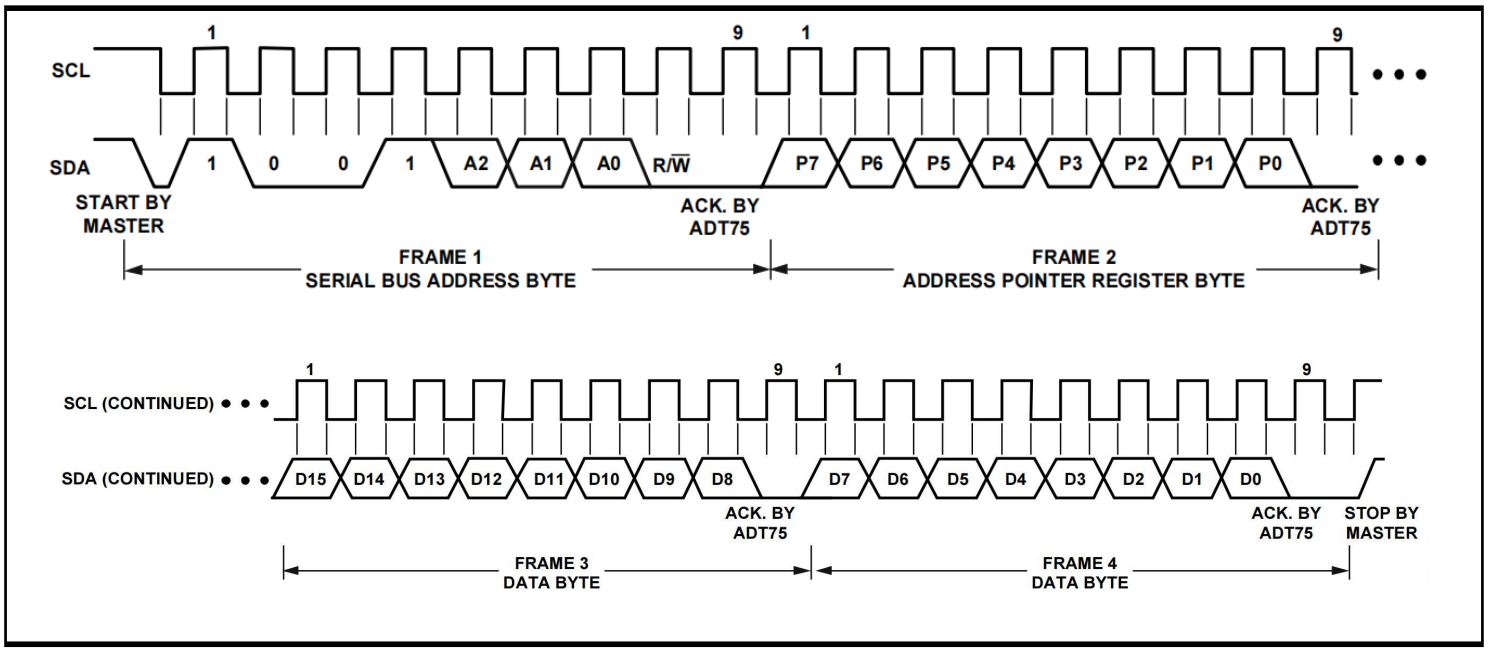

Figure 7. Writing to the Address Pointer Register Followed by a Single Byte of Data to the Configuration Register

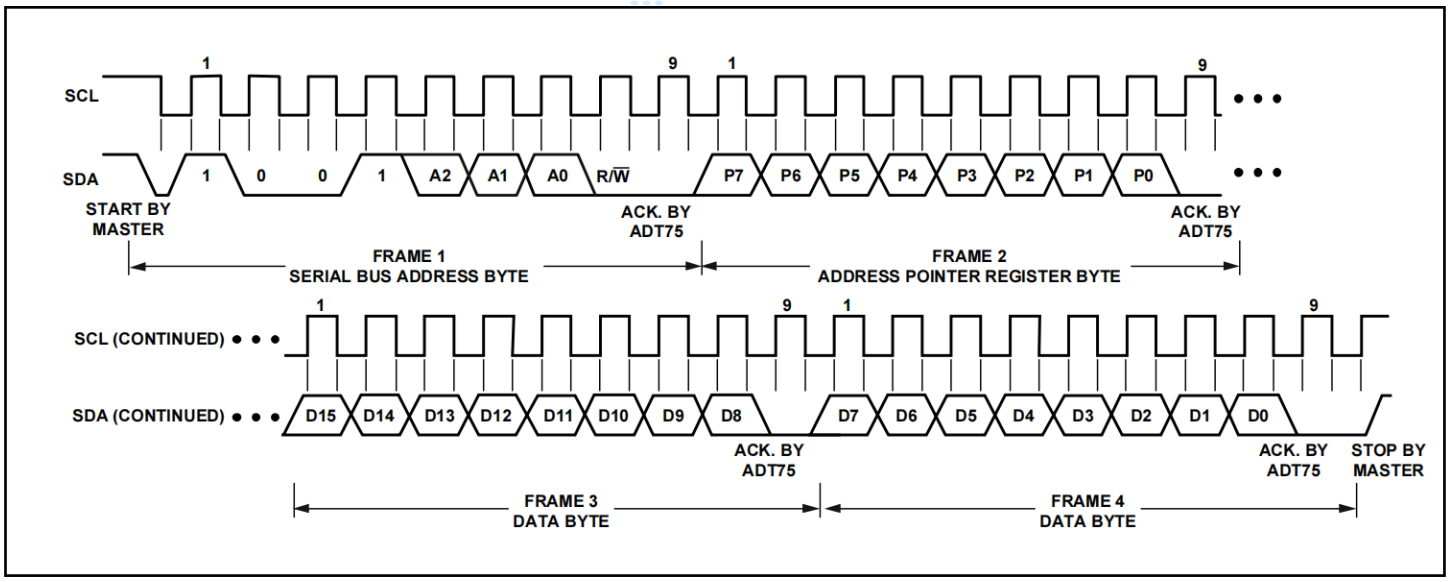

Figure 8. Writing to the Address Pointer Register Followed by T Bytes of Data to Either T or T_{OS} Registers

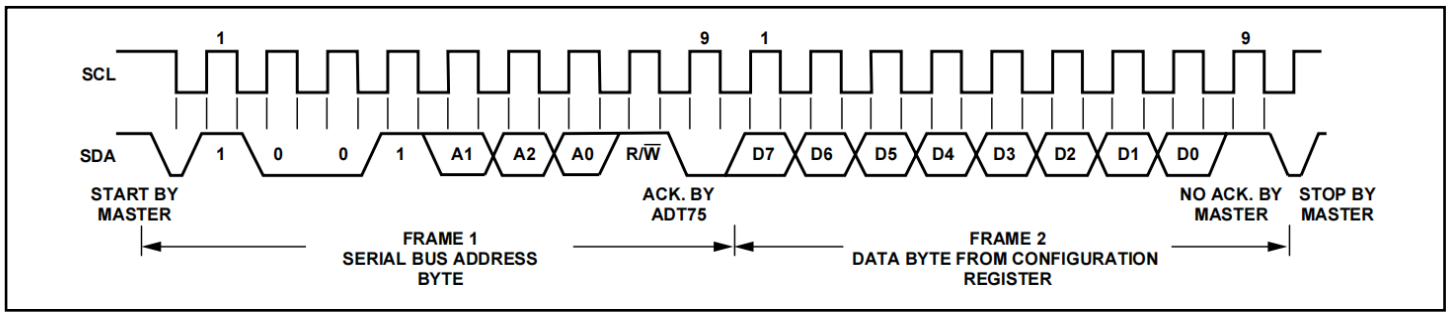

Figure 9. Reading Back Data from the Configuration Register

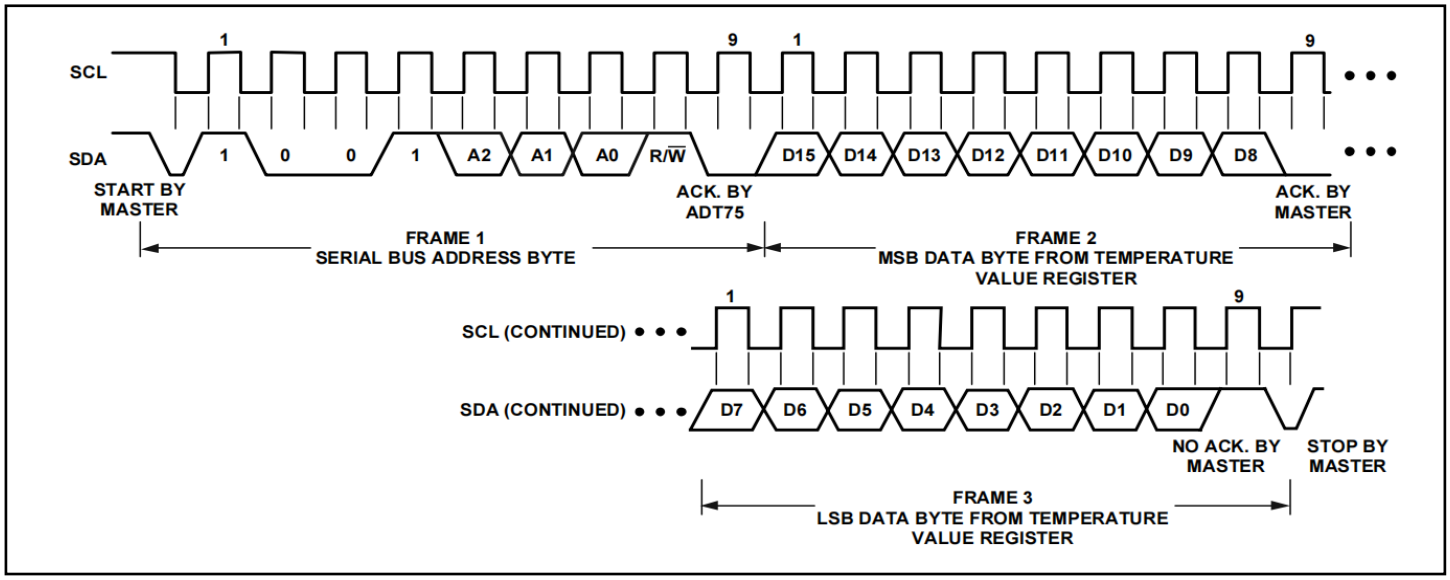

Figure 10. Reading Back Data from the Temperature Value Register

READING DATA

Reading data from the ADT75 is done in a one data byte operation for the configuration register and a two data byte operation for the temperature value register, T_{HYST} register, and the T_{OS} setpoint register. Reading back the contents of the configuration register is shown in Figure 9. Reading back the contents of the temperature value register is shown in Figure 18. Reading back from any register first requires a single-byte write operation to the address pointer register to set up the register address of the register that is going to be read from. To read from another register, execute another write to the address pointer register to set up the relevant register address. Thus, block reads are not possible, that is, there is no I^2C auto-increment. If the address pointer register has previously been set up with the address of the register that is going to receive a read command then there is no need to repeat a write operation to set up the register address again.

OS/ALERT OUTPUT OVERTEMPERATURE MODES

The ADT75 has two overtemperature modes, comparator mode and interrupt mode. The OS/ALERT pin defaults on power up as an OS pin; the comparator mode is the default power up overtemperature mode. The OS/ALERT output pin becomes active when the temperature measured exceeds the temperature limit stored in the T_{OS} setpoint register. How this pin reacts after this event depends on the overtemperature mode selected.

Comparator Mode

In the comparator mode, the OS/ALERT pin returns to its inactive status when the temperature measured drops below the limit stored in the T_{HYST} setpoint register. Putting the ADT75 into shutdown mode does not reset the OS/ALERT state in comparator mode.

Interrupt Mode

In the interrupt mode, the OS/ALERT pin goes inactive when any ADT75 register is read. The OS/ALERT pin can only return to active status if the temperature measured is below the limit stored in the T_{HYST} setpoint register. Once the OS/ALERT pin is reset, it goes active again only when the temperature has gone above the T_{OS} limit. The OS/ALERT pin can also be reset by a SMBus alert response address (ARA) when this pin has been selected as a SMBus alert pin. More information is given in the SMBUS Alert section. Figure 11 illustrates the comparator and interrupt modes with both pin polarity settings. Placing the ADT75 into shutdown mode resets the OS/ALERT pin in the interrupt mode.

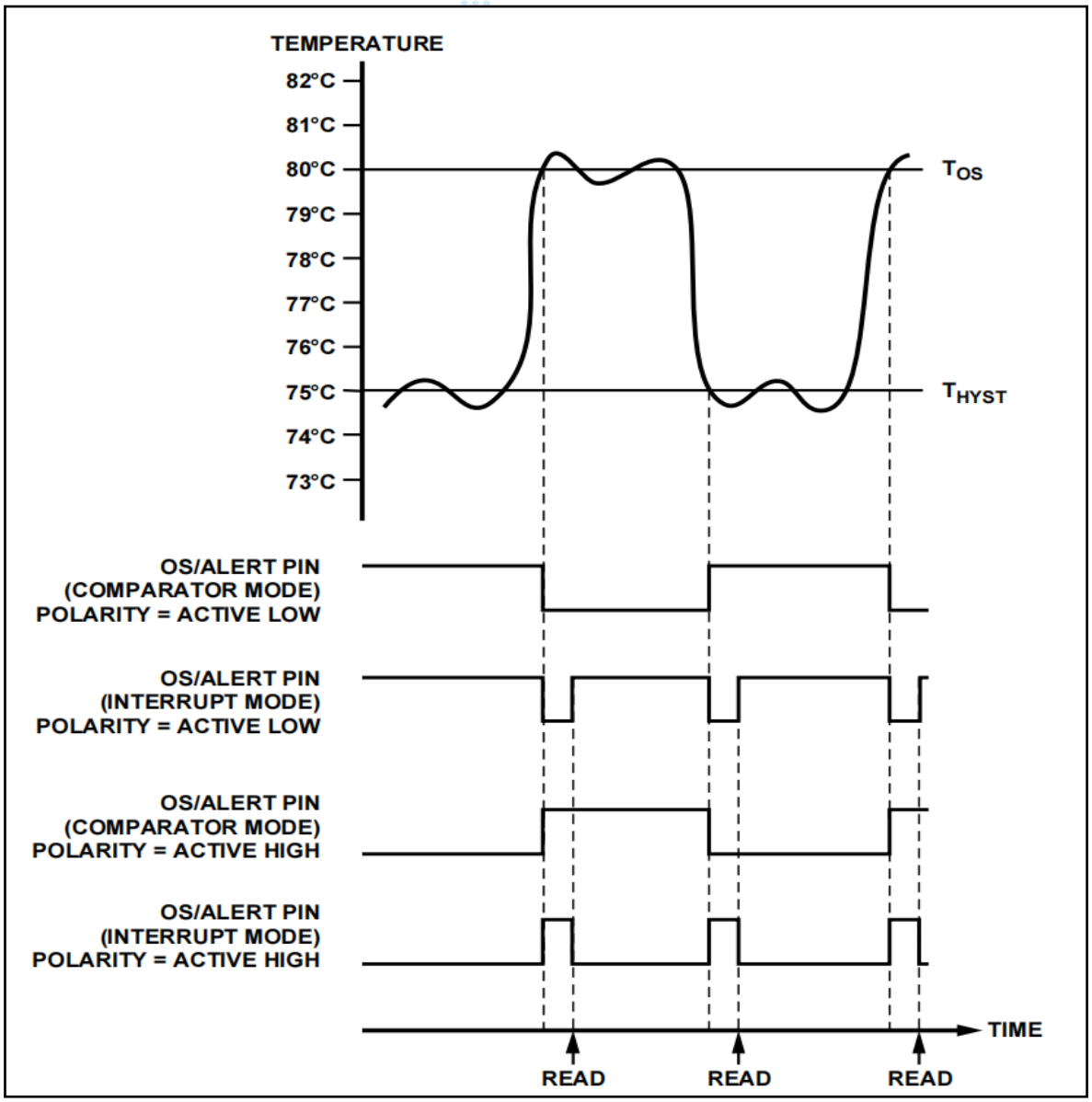

Figure 11. OS/ALERT Output Temperature Response Diagram

SMBus ALERT

The OS/ALERT pin can behave as a SMBus alert pin when the SMBus alert function is enabled by setting Bit D7 in the configuration register. The interrupt mode must also be selected (Bit D1 in the configuration register). The OS/ALERT pin is an open-drain output and requires a pull-up to V_{DD}. Several SMBus alert outputs can be wire-AND ' ed together, so that the common line goes low if one or more of the SMBus alert outputs goes low. The polarity of the OS/ALERT pin must be set for active low for a number of outputs to be wire-AND ' ed together. The OS/ALERT output can operate as a SMBALERT function. Slave devices on the SMBus normally cannot signal to the master that they want to talk, but the SMBALERT function allows them to do so. SMBALERT is used in conjunction with the SMBus general call address.

The OS/ALERT output can operate as a SMBALERT function. Slave devices on the SMBus normally cannot signal to the master that they want to talk, but the SMBALERT function allows them to do so. SMBALERT is used in conjunction with the SMBus general call address. One or more SMBus alert outputs can be connected to a common SMBALERT line connected to the master. When the SMBALERT line is pulled low by one of the devices, the following procedure occurs as shown in Figure 12.

1. SMBALERT is pulled low.
2. Master initiates a read operation and sends the SMBus alert response address (ARA = 0001 100). This reserved SMBus/ I^2C address must not be used as a specific device address.
3. The device whose SMBus alert output is low responds to the SMBus alert response address and the master reads its device address. As the device address is seven bits long, the ADT75 ' s LSB is free to be used as an indicator as to which temperature limit was exceeded. The LSB is high if the temperature is greater than or equal to T_{OS}, and the LSB is low if the temperature is less than T_{HYST}. The address of the device is now known and it can be interrogated in the usual way.
4. If more than one devices ' SMBus alert output is low, the one with the lowest device address has priority, which is in accordance with normal SMBus specifications.

Once the ADT75 has responded to the SMBus alert response address, it resets its SMBus alert output. If the SMBALERT line remains low, the master sends the ARA again. It continues to do this until all devices whose SMBALERT outputs were low have responded.

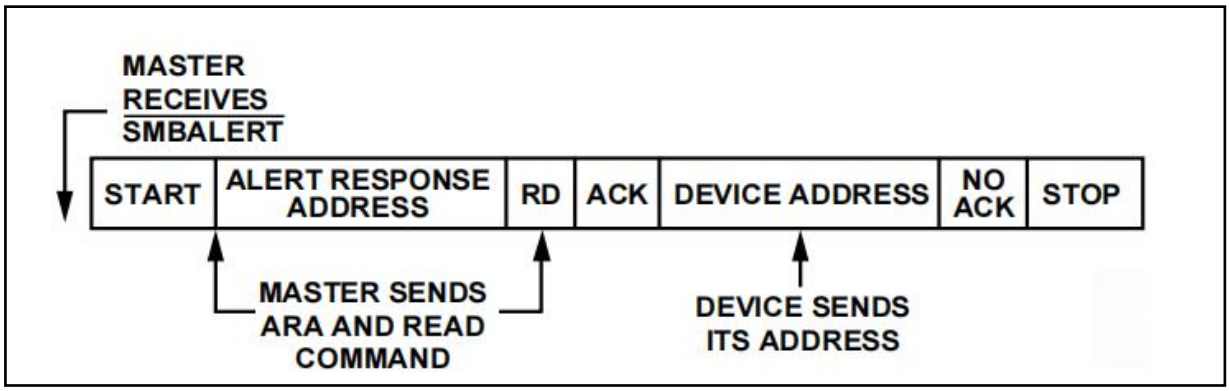

Figure 12. ADT75 Responds to SMBALERT ARA

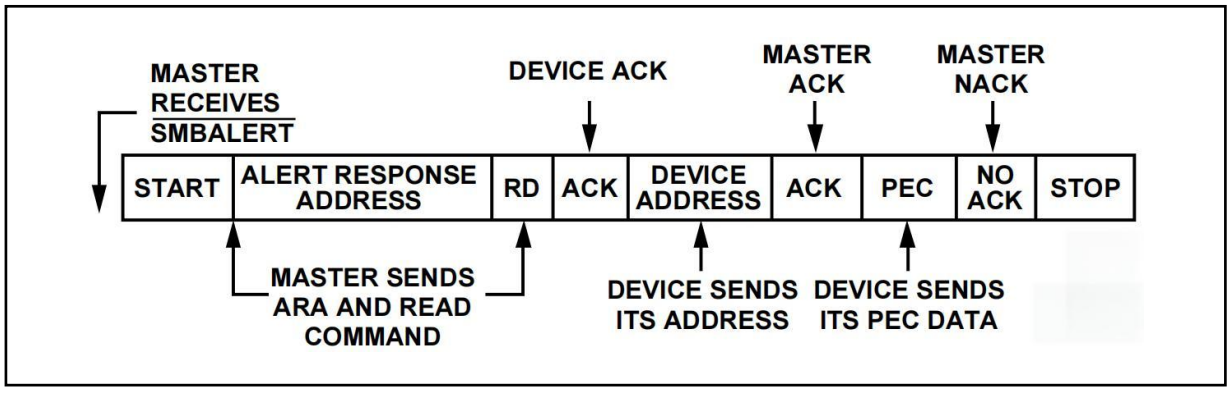

Figure 13. ADT75 Responds to SMBALERT ARA with Packet Error Checking (PEC)

Order information

Order Number	Package	Package Quantity	Marking On The park	Temperature
ADT75ARZ-REEL-TUDI	SOP8	Tape,Reel,4000	ADT75A	−55°C to +125°C
ADT75ARMZ-REEL-TUDI	MSOP8	Tape,Reel,4000	ADT75A	
			T5B	
ADT75BRMZ-REEL-TUDI	MSOP8	Tape,Reel,4000	ADT75B	
			T5C	

Revision history

	Date	Revision	Page
V1.0	2021/3	New	1-15
V1.1	2025-4	Update model and PDF template	1-30

Package SOP8

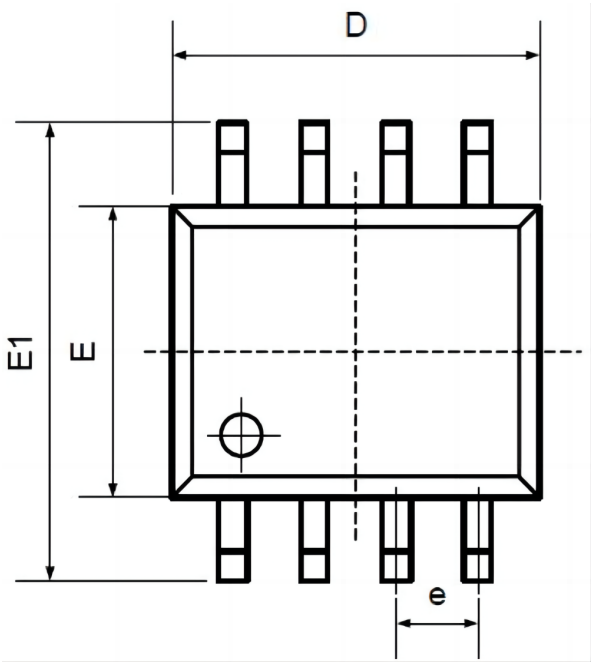

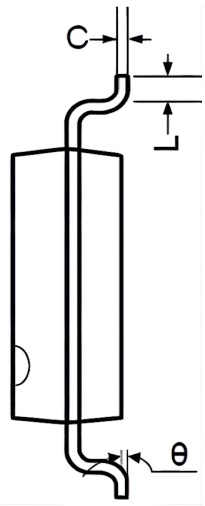

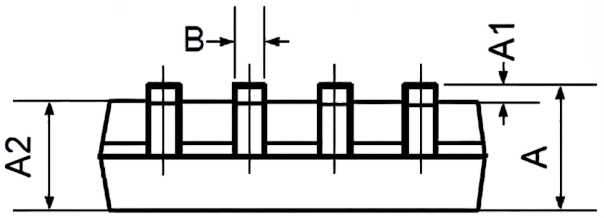

Symbol	Dimensions In Millimeters		Dimensions In Inches	
	Min	Max	Min	Max
A	1.350	1.750	0.053	0.069
A1	0.100	0.250	0.004	0.010
A2	1.350	1.550	0.053	0.061
B	0.330	0.510	0.013	0.020
C	0.190	0.250	0.007	0.010
D	4.780	5.000	0.188	0.197
E	3.800	4.000	0.150	0.157
E1	5.800	6.300	0.228	0.248
e	1.270TYP		0.050TYP	
L	0.400	1.270	0.016	0.050
θ	0°	8°	0°	8°

Package MSOP8

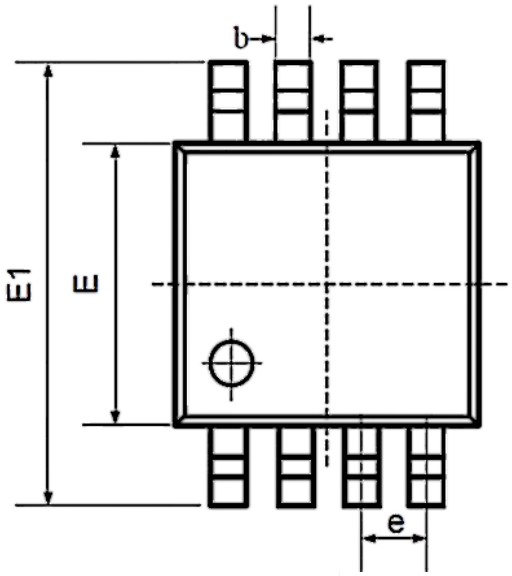

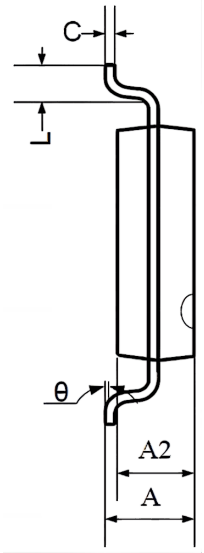

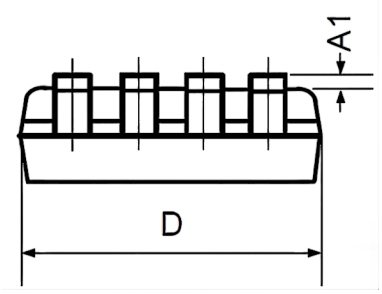

Symbol	Dimensions In Millimeters		Dimensions In Inches	
	Min	Max	Min	Max
A	0.800	1.200	0.031	0.047
A1	0.000	0.200	0.000	0.008
A2	0.760	0.970	0.030	0.038
b	0.30 TYP		0.012 TYP	
C	0.15 TYP		0.006 TYP	
D	2.900	3.100	0.114	0.122
e	0.65 TYP		0.026 TYP	
E	2.900	3.100	0.114	0.122
E1	4.700	5.100	0.185	0.201
L	0.410	0.650	0.016	0.026
θ	0°	6°	0°	6°

Important statement:

●TUDI Semiconductor reserves the right to modify the product manual without prior notice! Before placing an order, customers need to confirm whether the obtained information is the latest version and verify the completeness of the relevant information.

●Any semi-guide product is subject to failure or malfunction under specified conditions. It is the buyer's responsibility to comply with safety standards when using TUDI Semiconductor products for system design and whole machine manufacturing.And take the appropriate safety measures to avoid the potential in the risk of loss of personal injury or loss of property situation!

●TUDI Semiconductor products have not been licensed for life support, military, and aerospace applications,and therefore TUDI Semiconductor is not responsible for any consequences arising from the use of this product in these areas.

●If any or all TUDI Semiconductor products (including technical data, services) described or contained in this document are subject to any applicable local export control laws and regulations, they may not be exported without an export license from the relevant authorities in accordance with such laws.

●The specifications of any and all TUDI Semiconductor products described or contained in this document specify the performance, characteristics, and functionality of said products in their standalone state, but do not guarantee the performance, characteristics, and functionality of said products installed in Customer's products or equipment. In order to verify symptoms and conditions that cannot be evaluated in a standalone device, the Customer should ultimately evaluate and test the device installed in the Customer's product device.

●TUDI Semiconductor documentation is only allowed to be copied without any alteration of the content and with the relevant authorization.TUDI Semiconductor assumes no responsibility or liability for altered documents.

●TUDI Semiconductor is committed to becoming the preferred semiconductor brand for customers, and TUDI Semiconductor will strive to provide customers with better performance and better quallity products.