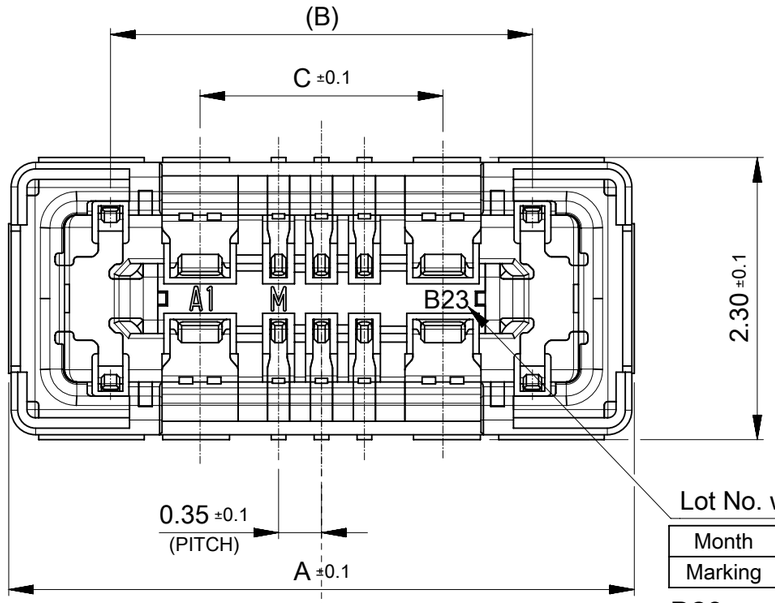

Lot No. with Laser(Month Day)

Month	JAN-SEP	OCT	NOV	DEC
Marking	1-9	A	B	C

B23
DAY(01~31)
MONTH

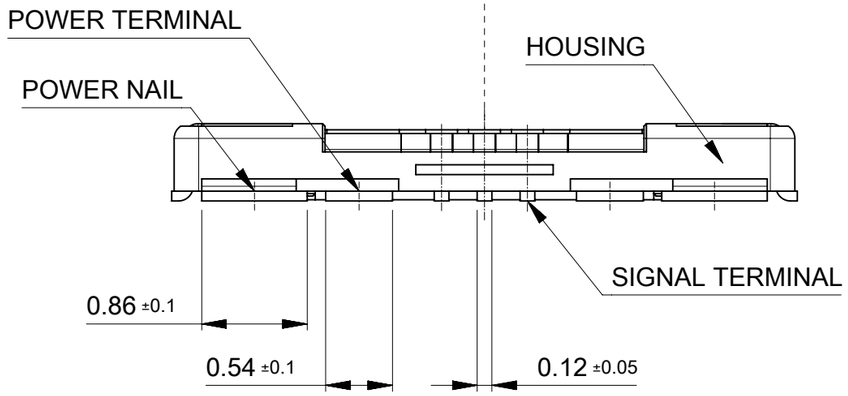

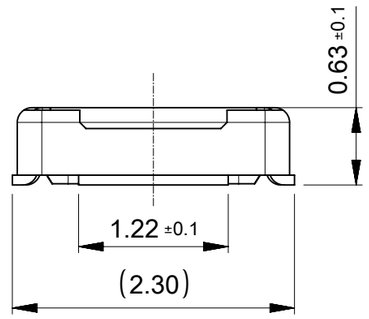

NOTES

1. MATERIAL
   HOUSING : LIQUID CRYSTAL POLIMER UL94V-0 (COLOR : BLACK)
   TERMINAL : CORSON ALLOY
   FITTING NAIL : CORSON ALLOY
2. PLATING
   TERMINAL :
   CONTACT AREA : SEPERATED GOLD PLATING(0.1μm MINIMUM)
   SOLDER TAIL AREA : SEPERATED GOLD PLATING(0.05μm MINIMUM)
   UNDER PLATING : NICKEL OVERALL(1.0μm MINIMUM)
   * DIVIED INTO PARTS THE GOLD PLATING OF THE CONTACT AND THE TAIL PART BY THE NICKEL PLATING.
   FITTING NAIL :
   CONTACT AREA : SEPERATED GOLD PLATING(0.1μm MINIMUM)
   SOLDER TAIL AREA : SEPERATED GOLD PLATING(0.05μm MINIMUM)
   UNDER PLATING : NICKEL OVERALL(1.0μm MINIMUM)
   * DIVIED INTO PARTS THE GOLD PLATING OF THE CONTACT AND THE TAIL PART BY THE NICKEL PLATING.
3. MATE WITH : 2202510060
4. TAIL AND FITTING NAIL COPLANARITY TO BE 0.08 MAXIMUM.
5. PROHIBITED AREA OF PATTERN WIRING AND SOLDER.
   (FOR EACH AREA, THE WIRING THAT TOUCHES ON THE SOLDER CAN BE ATTACHED, THEN COVERED WITH A FILM TO KEEP SOLDER OUT)

1.98	3.44	5.10	2202500069	□	---	6S+2P
C	(B)	A	EMBOSSED TAPE PACKAGE	HIGH VOL. TOOL	LOW VOL. TOOL	Ckts
			ORDER No.	SAMPLE PREPARATION O : TOOLED □ : WORK PROCESS --- : TOOLING TO BE CONFIRMED		
	CONNECTOR SERIES No. : 2202500**0					

FUNCTIONAL SYMBOLS: FA = 0, FC = 0, FP = 0
DIVISIONAL SYMBOLS

THIS DRAWING CONTAINS INFORMATION THAT IS PROPRIETARY TO MOLEX ELECTRONIC TECHNOLOGIES, LLC AND SHOULD NOT BE USED WITHOUT WRITTEN PERMISSION

DIMENSION UNITS	SCALE
mm	20:1

GENERAL TOLERANCES (UNLESS SPECIFIED)

ANGULAR TOL	±	3.0 °
4 PLACES	±	0.1
3 PLACES	±	0.1
2 PLACES	±	0.1
1 PLACE	±	0.1
0 PLACES	±	0.2

DRAFT WHERE APPLICABLE MUST REMAIN WITHIN DIMENSIONS

CURRENT REV DESC:

EC NO: 746955
DRWN: DWLEE02 2023/04/21
CHK'D: JHCHANG 2023/04/21
APPR: JBJIN 2023/04/21

INITIAL REVISION:
DRWN: BKBAE 2022/12/13
APPR: JBJIN 2023/04/21

THIRD ANGLE PROJECTION

DRAWING	SERIES
A3-SIZE	220250

molex

0.35 BB CONN. H=0.7 GCB7V REC ASSY FOR BATTERY (18A)

PRODUCT CUSTOMER DRAWING

DOCUMENT NUMBER	DOC TYPE	DOC PART	REVISION
2202500060-SD	PSD	000	A1

MATERIAL NUMBER	CUSTOMER	SHEET NUMBER
SEE SHEET1	GENERAL	1 OF 2

DOCUMENT STATUS	P1	RELEASE DATE	2023/04/21 09:25:08

FORMAT: tb-prog-A3
REVISION: J1
DATE: 2021/05/01

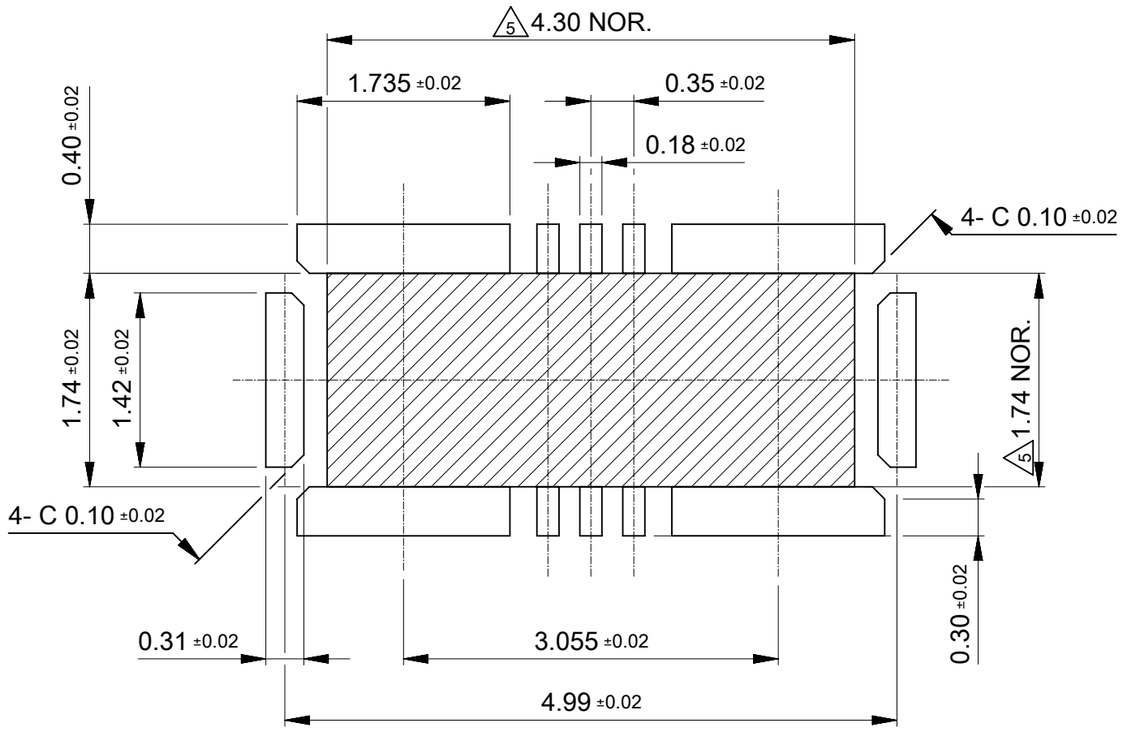

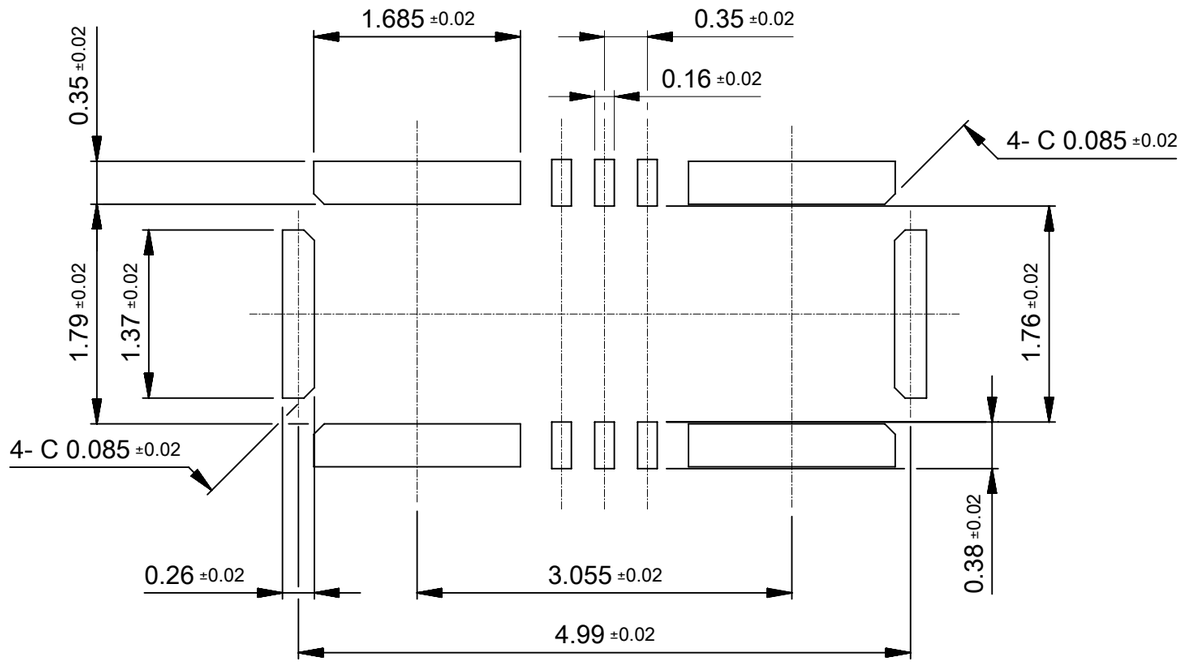

RECOMMENDED P.C.BOARD PATTERN LAYOUT

(FOR REFERENCE)

SOLDERING PROHIBITED AREA.
WHEN WIRING IS LOCATED,
THE WIRING MUST BE MASKED BY COVER LAY OR RESIST FILM.

RECOMMENDED METAL MASK LAYOUT

(FOR REFERENCE)

RECOMMENDED THICKNESS : 0.08mm
RECOMMENDED APERTURE DIMENSION IS JUST SAME AS SHOWN FIGURE ABOVE.
FOR THIS DIMENSION, APERTURE RATIO ARE POWER, SIGNAL TERMINAL AND POWER NAIL ALL 80%.

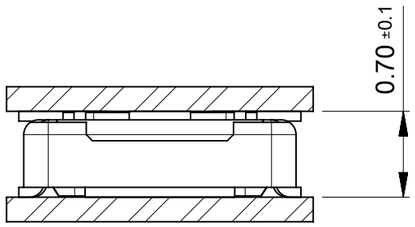

MATING CONDITION

THIS DIMENSION SHOWS A DIMENSION BETWEEN THE TAIL TO TAIL.

THIS DRAWING CONTAINS INFORMATION THAT IS PROPRIETARY TO MOLEX ELECTRONIC TECHNOLOGIES, LLC AND SHOULD NOT BE USED WITHOUT WRITTEN PERMISSION

FUNCTIONAL SYMBOLS	DIMENSION UNITS	SCALE	CURRENT REV DESC:	molex
FA = 0	mm	20:1		
FC = 0	GENERAL TOLERANCES (UNLESS SPECIFIED)			0.35 BB CONN. H=0.7 GCB7V REC ASSY FOR BATTERY (18A)
FP = 0	ANGULAR TOL ± 3.0 °		EC NO: 746955	
DIVISIONAL SYMBOLS	4 PLACES ± 0.1		DRWN: DWLEE02 2023/04/21	
	3 PLACES ± 0.1		CHK'D: JHCHANG 2023/04/21	PRODUCT CUSTOMER DRAWING
	2 PLACES ± 0.1		APPR: JBJIN 2023/04/21	
	1 PLACE ± 0.1		INITIAL REVISION:	DOCUMENT NUMBER: 2202500060-SD; DOC TYPE: PSD; DOC PART: 000; REVISION: A1
	0 PLACES ± 0.2		DRWN: BKBAE 2022/12/13	
			APPR: JBJIN 2023/04/21	
	DRAFT WHERE APPLICABLE MUST REMAIN WITHIN DIMENSIONS		THIRD ANGLE PROJECTION; DRAWING: A3-SIZE; SERIES: 220250	MATERIAL NUMBER: SEE SHEET1; CUSTOMER: GENERAL; SHEET NUMBER: 2 OF 2

DOCUMENT STATUS	P1	RELEASE DATE	2023/04/21 09:25:08

FORMAT: master_tb_mod-A3
REVISION: J1
DATE: 2021/05/01

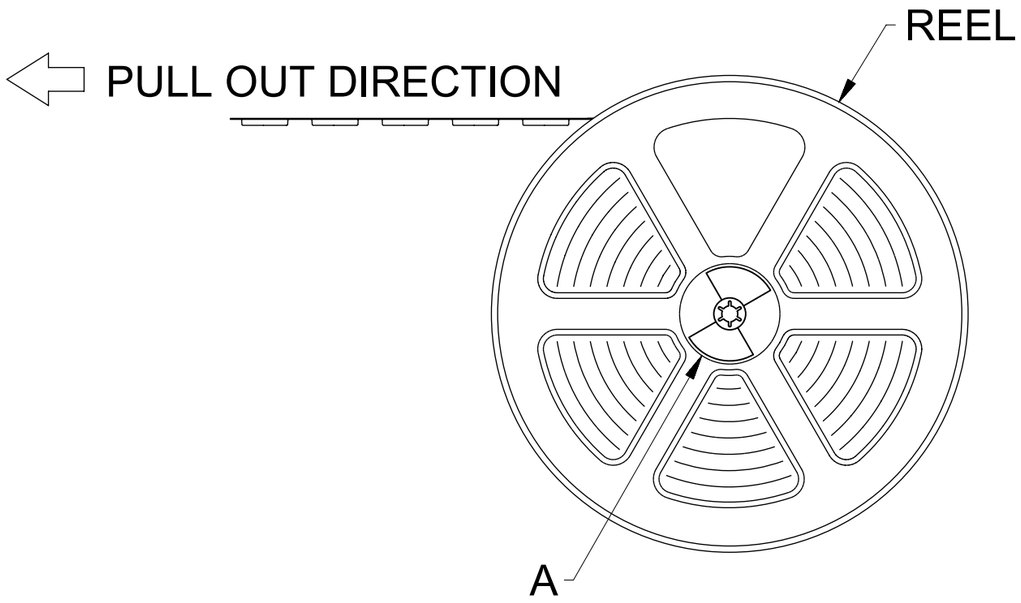

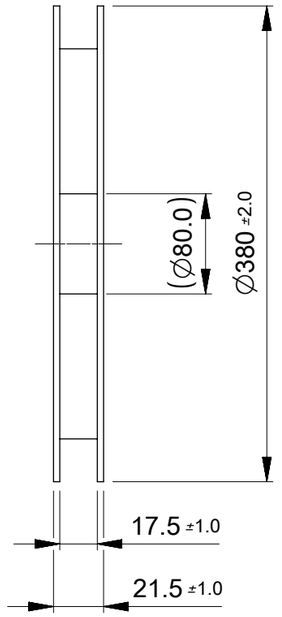

NOTES
1. RE DETAILED DIMESION, SEE PRODUCT DRAWING.
2. NUMBER OF CONNECTORS : 15,000PCS/REEL
3. LEAD TAPE LENGTH :

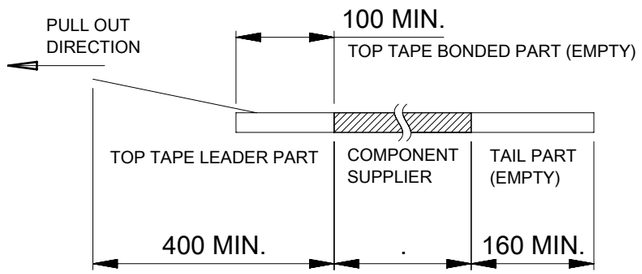

4. PEEL OFF FORCE OF THE TOP TAPE IS DEFINDED BY IEC 60286-3.
5. MATERIAL
   - CARRIER TAPE : POLYSTYRENE OR PET
   - TOP TAPE : PET, OTHER
   - REEL : POLYSTYRENE(PS) [RECYCLE MATERIAL CONTAINED]

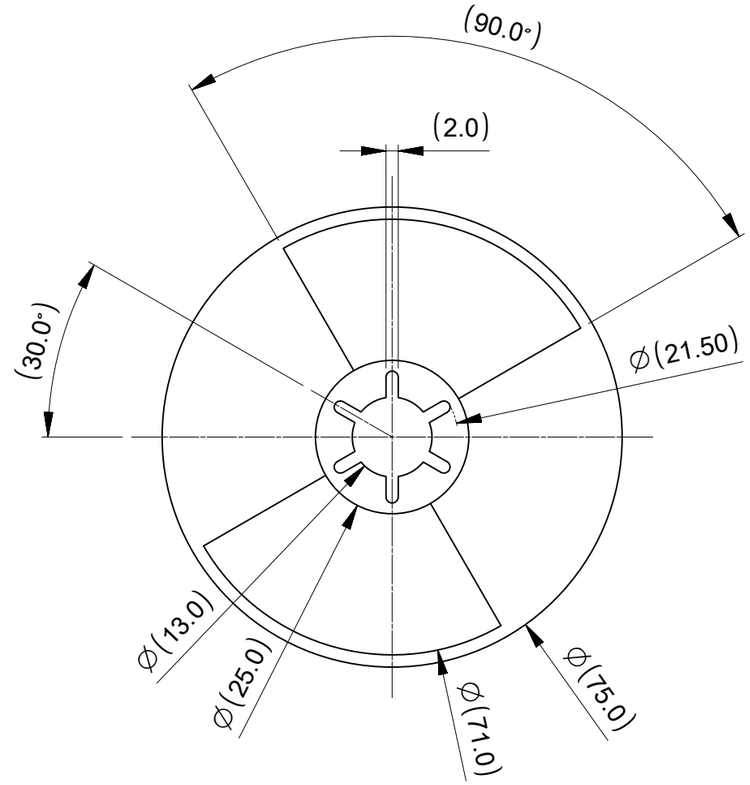

DETAIL "A"

THIS DRAWING CONTAINS INFORMATION THAT IS PROPRIETARY TO MOLEX ELECTRONIC TECHNOLOGIES, LLC AND SHOULD NOT BE USED WITHOUT WRITTEN PERMISSION

FUNCTIONAL SYMBOLS	FA = 0	DIMENSION UNITS	mm
	FC = 0	SCALE	1:1
	FP = 0	GENERAL TOLERANCES (UNLESS SPECIFIED)	
DIVISIONAL SYMBOLS		ANGULAR TOL ± 3.0 °	
		4 PLACES ± 0.1	
		3 PLACES ± 0.1	
		2 PLACES ± 0.1	
		1 PLACE ± 0.1	
		0 PLACES ± 0.2	
		DRAFT WHERE APPLICABLE MUST REMAIN WITHIN DIMENSIONS	

CURRENT REV DESC:

EC NO: 837876
DRWN: JHCHANG 2025/10/20
CHK'D: JSLEE04 2025/10/20
APPR: JBJIN 2025/10/21

INITIAL REVISION:
DRWN: BKBAE 2025/07/24
APPR: JBJIN 2025/10/21

THIRD ANGLE PROJECTION | DRAWING: A3-SIZE | SERIES: 220250

molex

0.35 BB CONN. H=0.7 GCB7V REC ASSY PKG FOR BATTERY (18A)

PRODUCT CUSTOMER DRAWING

DOCUMENT NUMBER	DOC TYPE	DOC PART	REVISION
2202500069-PKG	PSD	000	A1

MATERIAL NUMBER	CUSTOMER	SHEET NUMBER
SEE SHEET2		1 OF 2

DOCUMENT STATUS	P1	RELEASE DATE	2025/10/21 00:24:03

FORMAT: tb-prod-A3
REVISION: J1
DATE: 2021/05/01

PULL OUT DIRECTION

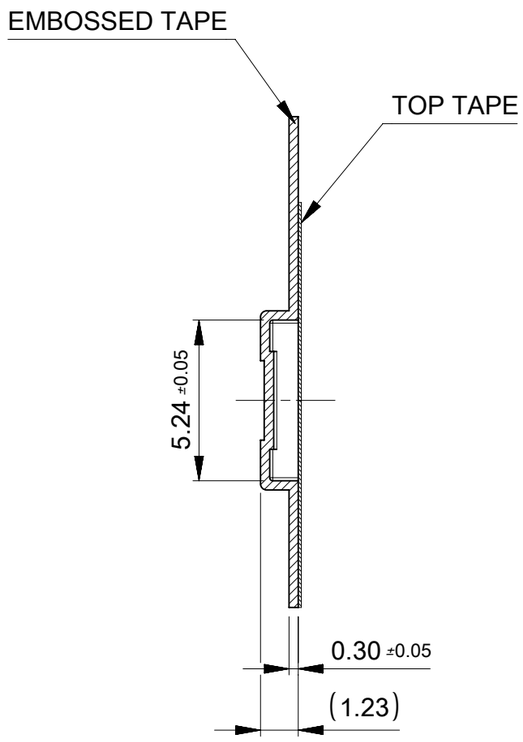

SECTION B-B

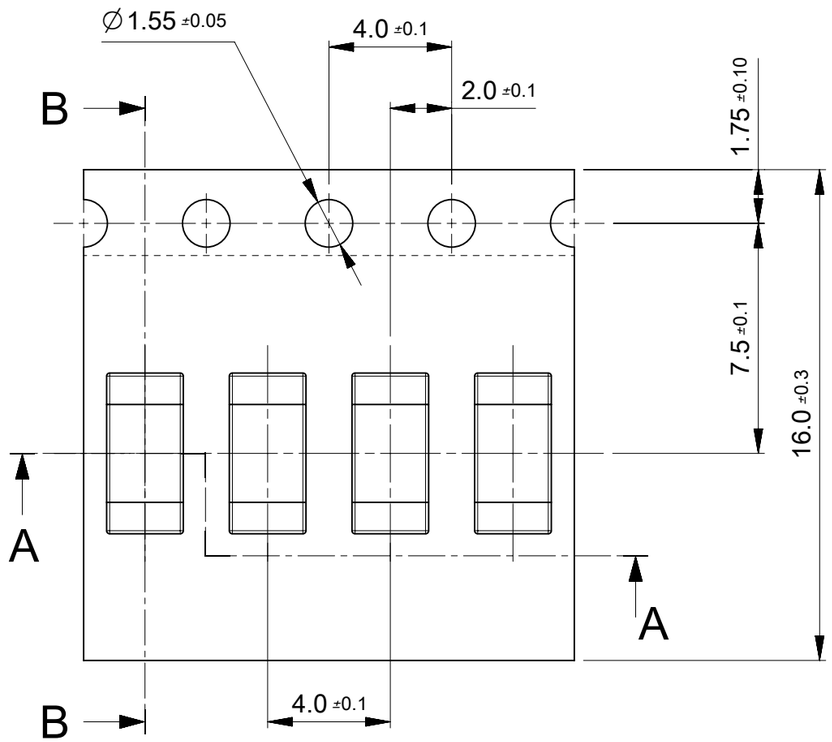

(ACCUMULATIVE : PITCH 40±2)

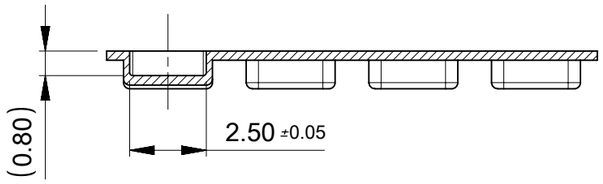

SECTION A-A

2202500069	O	---	6S+2P
EMBOSSED TAPE PACKAGE	HIGH VOL. TOOL	LOW VOL. TOOL	Ckts
ORDER No.	SAMPLE PREPARATION O : TOOLED □ : WORK PROCESS --- : TOOLING TO BE CONFIRMED		
CONNECTOR SERIES No. : 2202500**0			

FUNCTIONAL SYMBOLS
FA = 0
FC = 0
FD = 0
DIVISIONAL SYMBOLS

THIS DRAWING CONTAINS INFORMATION THAT IS PROPRIETARY TO MOLEX ELECTRONIC TECHNOLOGIES, LLC AND SHOULD NOT BE USED WITHOUT WRITTEN PERMISSION

DIMENSION UNITS	SCALE
mm	5:1

GENERAL TOLERANCES (UNLESS SPECIFIED)

ANGULAR TOL	±	3.0 °
4 PLACES	±	0.1
3 PLACES	±	0.1
2 PLACES	±	0.1
1 PLACE	±	0.1
0 PLACES	±	0.2

DRAFT WHERE APPLICABLE MUST REMAIN WITHIN DIMENSIONS

CURRENT REV DESC:

EC NO: 837876
DRWN: JHCHANG 2025/10/20
CHK'D: JSLEE04 2025/10/20
APPR: JBJIN 2025/10/21

INITIAL REVISION:
DRWN: BKBAE 2025/07/24
APPR: JBJIN 2025/10/21

molex

0.35 BB CONN. H=0.7 GCB7V REC ASSY PKG FOR BATTERY (18A)

PRODUCT CUSTOMER DRAWING

DOCUMENT NUMBER	DOC TYPE	DOC PART	REVISION
2202500069-PKG	PSD	000	A1

THIRD ANGLE PROJECTION | DRAWING: A3-SIZE | SERIES: 220250 | MATERIAL NUMBER: SEE SHEET2 | CUSTOMER | SHEET NUMBER: 2 OF 2

DOCUMENT STATUS	P1	RELEASE DATE	2025/10/21 00:24:03

FORMAT: master-tb-prod-A3
REVISION: J1
DATE: 2021/05/01