# JWH5123

## 65V/3.5A Asynchronous Step-Down Converter

*Preliminary Specifications Subject to Change without Notice*

## DESCRIPTION

The JW®H5123 series are current mode monolithic buck switching regulators. Operating with an input range of 4.5V~65V, the JWH5123 series delivers 3.5A of continuous output current with an integrated high side N-Channel MOSFET. At light loads, the regulator operates in low frequency to maintain high efficiency. Current mode control provides tight load transient response and cycle-by-cycle current limit.

The JWH5123 series guarantees robustness with short-circuit protection, thermal protection, current run-away protection, and input under voltage lockout.

The JWH5123 is available in DFN4x4-10 package, the JWH5123S and JWH5123P are available in ESOP8 package, which provides a compact solution with minimal external components.

*Company's Logo is Protected, "JW" and "JOULWATT" are Registered Trademarks of JoulWatt technology Inc.*

## FEATURES

- 4.5V to 65V operating input range
  3.5A output current
- 0.8V ± 1% internal voltage reference (JWH5123)
- 0.75V ± 1% internal voltage reference (JWH5123S/JWH5123P)
- Adjustable switching frequency
- Power Good Indicator (JWH5123/ JWH5123P)
- External Soft-start (JWH5123/ JWH5123S)
- Adjustable UVLO and hysteresis
- Current run-away protection
- Short circuit protection
- Thermal protection
- Available in DFN4x4-10 package (JWH5123)
- Available in ESOP8 package(JWH5123S/ JWH5123P)

## APPLICATIONS

- Industrial Automation and Motor Control
- Vehicle Accessories: GPS Entertainment
- USB Dedicated Charging Ports and Battery Chargers
- 12-V, 24-V and 48-V Industrial, Automotive and Communications Power Systems

For Internal Use Only
JoulWatt Confidential



This document contains information of a product under development.
Joulwatt reserves the right to change this product without notice.

## TYPICAL APPLICATION

3.5A Step Down Regulators-JWH5123

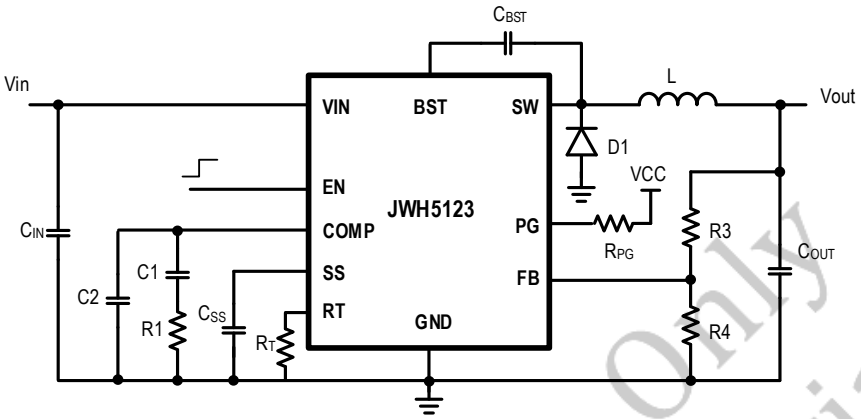


For Internal Use Only
JoulWatt Confidential


JoulWatt® Proprietary Information. Patent Protected.
Unauthorized Photocopy and Duplication Prohibited.
This document contains information of a product under development.
Joulwatt reserves the right to change this product without notice.

## ORDER INFORMATION

| DEVICE[1)] | PACKAGE | TOP MARKING[2)] | ENVIRONMENTAL[3)] |
|---|---|---|---|
| JWH5123DFNM#TR | DFN4x4-10 | JWH5123<br>YW□□□□□ | Green |
| JWH5123SESOP#TRPBF | ESOP8 | JWH5213S<br>YW□□□□□ | Green |
| JWH5123PESOP#TRPBF | ESOP8 | JWH5213P<br>YW□□□□□ | Green |

**Notes:**

1) JW□□ # TRPBF
- PB Free(If PBF is not shown, it means PB free)
- Tape and Reel(If TR is not shown, it means tube)
- Package Code
- Part No.

2) Line1: JW□□□□□
- Product code
- Joulwatt LOGO

Line2: YW□□□□□
- Lot number
- Week code
- Year code

3) All Joulwatt products are packaged with Pb-free and Halogen-free materials and compliant to RoHS standards.

## PIN CONFIGURATION

TOP VIEW

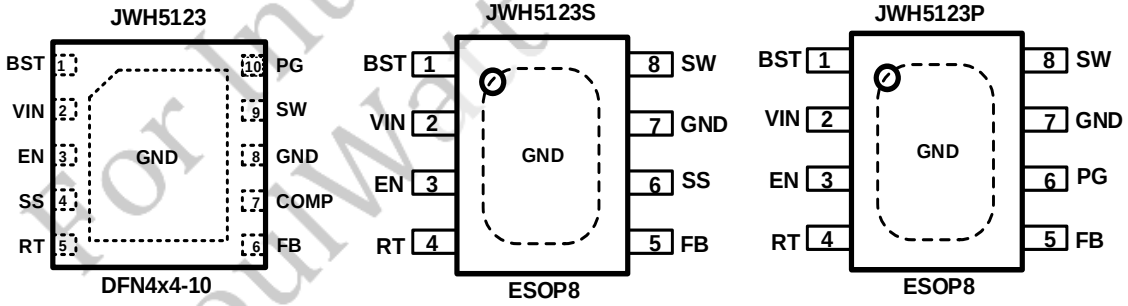


For Internal Use Only
JoulWatt Confidential


This document contains information of a product under development.
Joulwatt reserves the right to change this product without notice.

## ABSOLUTE MAXIMUM RATING[1)]

VIN, SW Pin ..... -0.3V to 72V
SW Pin.....-0.6V(-7V for 10ns) to 72V(74V for 20ns)
EN Pin ..... -0.3V to 8.4V
BST Pin ..... SW-0.3V to SW+6V
COMP, SS Pin..... -0.3V to 3V
All Other Pins ..... -0.3V to 6V
Junction Temperature[2)] .....150ºC
Lead Temperature .....260ºC
Storage Temperature ..... -65ºC to +150ºC
ESD Susceptibility (Human Body Model)..... 2kV
ESD Susceptibility (Charged Device Model).....500V

## RECOMMENDED OPERATING CONDITIONS[3)]

Input Voltage $V_{IN}$ .....4.5V to 65V
Output Voltage Vout.....0.8V to Dmax x VIN
Operating Junction Temperature .....-40ºC to 125ºC

## THERMAL PERFORMANCE[4)]

| | $\theta_{JA}$ | $\theta_{Jc}$ |
|---|---|---|
| DFN4x4-10 | 35.1 | 2.2ºC/W |
| ESOP8 | 42.5 | 3.8ºC/W |

**Note:**

**1)** Exceeding these ratings may damage the device. These stress ratings do not imply function operation of the device at any other conditions beyond those indicated under RECOMMENDED OPERATING CONDITIONS.

**2)** The JWH5123 series includes thermal protection that is intended to protect the device in overload conditions. Continuous operation over the specified absolute maximum operating junction temperature may damage the device.

**3)** The device is not guaranteed to function outside of its operating conditions.

**4)** Measured on JESD51-7, 4-layer PCB

For Internal Use Only
JoulWatt Confidential


This document contains information of a product under development.
Joulwatt reserves the right to change this product without notice.

## ELECTRICAL CHARACTERISTICS

*$V_{IN}$ = 12V, $T_A$ = 25 ºC, unless otherwise stated.*

| Item | Symbol | Condition | Min. | Typ. | Max. | Units |
|---|---|---|---|---|---|---|
| $V_{IN}$ Under-voltage Lockout Threshold | $V_{IN_MIN}$ | $V_{IN}$ rising | 4.1 | 4.3 | 4.49 | V |
| $V_{IN}$ Under-voltage Lockout Hysteresis | $V_{IN_MIN_HYST}$ | $V_{IN}$ falling | | 200 | | mV |
| Shutdown Supply Current | $I_{SD}$ | $V_{EN}$=0V | | 4 | 6 | μA |
| Supply Current | $I_Q$ | $V_{EN}$=5V, $V_{FB}$=1V | | 180 | 230 | μA |
| Feedback Voltage | $V_{FB}$ | 4.5V≤$V_{VIN}$≤65V, $T_J$ =-40 ºC ~125 ºC JWH5123 | 792 | 800 | 808 | mV |
| | | 4.5V≤$V_{VIN}$≤65V, $T_J$ =-40 ºC ~125 ºC JWH5123S/JWH5123P | 742 | 750 | 758 | mV |
| Power Switch Resistance[5)] | $R_{DS(ON)}$ | $T_J$ =-40 ºC ~125 ºC | | 97 | 180 | mΩ |
| Power Switch Leakage Current | $I_{LEAK}$ | $V_{IN}$=65V, $V_{EN}$=0V, $V_{SW}$=0V | | | 6 | uA |
| Current Limit Threshold | $I_{LIM}$ | | 4.3 | 5.2 | 6.2 | A |
| Error Amplifier Transconductance | $g_M$ | JWH5123 | | 335 | | uA/V |
| Error Amplifier DC Gain[5)] | Gain | JWH5123 | | 1000 | | V/V |
| Error Amplifier Source/Sink | $I_{EA}$ | JWH5123 | | ±37 | | uA |
| Switch Frequency | $f_{SW}$ | $R_{RT}$=200k, JWH5123 | 370 | 414 | 456 | kHz |
| | | $R_{RT}$=200k JWH5123S/JWH5123P | | 268 | | kHz |
| Switch Frequency Range | | | 100 | | 2000 | kHz |
| Minimum On Time[5)] | $T_{ON_MIN}$ | | | 100 | 130 | ns |
| Minimum Off Time | $T_{OFF_MIN}$ | $V_{FB}$=0.4V | | 165 | | ns |
| Soft-Start Charge Current | $I_{SS}$ | JWH5123/JWH5123S | | 1.8 | | uA |
| Soft-start Time[5)] | Tss | JWH5123P | | 1.6 | | ms |
| Power Good Lower Threshold | $PGD_{LTH}$ | FB rising JWH5123/JWH5123P | | 93% | | $V_{REF}$ |
| | | FB falling JWH5123/JWH5123P | | 90% | | $V_{REF}$ |
| Power Good Upper Threshold | $PGD_{UTH}$ | FB rising JWH5123/JWH5123P | | 108% | | $V_{REF}$ |
| | | FB falling JWH5123/JWH5123P | | 106% | | $V_{REF}$ |

For Internal Use Only
JoulWatt Confidential


JoulWatt® Proprietary Information. Patent Protected.
Unauthorized Photocopy and Duplication Prohibited.
This document contains information of a product under development.
Joulwatt reserves the right to change this product without notice.

| | | | | | | |
|---|---|---|---|---|---|---|
| Power Good Sink Current | $I_{PG}$ | $V_{PG}$=0.4V@25℃ JWH5123/JWH5123P | 0.8 | | | mA |
| EN shut down threshold voltage | $V_{EN_TH}$ | $V_{EN}$ rising, FB=0.6V | 1.1 | 1.22 | 1.34 | V |
| EN shut down hysteresis | $V_{EN_HYST}$ | | | 100 | | mV |
| Thermal Shutdown[5)] | $T_{TSD}$ | | | 170 | | °C |
| Thermal Shutdown Hysteresis[5)] | $T_{TSD_HYST}$ | | | 20 | | °C |

**Note：**

**5)** Guaranteed by design.

For Internal Use Only
JoulWatt Confidential


This document contains information of a product under development.
Joulwatt reserves the right to change this product without notice.

## PIN DESCRIPTION

| Pin JWH5123 | Pin JWH5123S | Pin JWH5123P | Name | Description |
|---|---|---|---|---|
| 1 | 1 | 1 | BST | Bootstrap pin for top switch. |
| 2 | 2 | 2 | VIN | Input voltage pin. VIN supplies power to the IC. Connect a 4.8V to 65V supply to VIN and bypass VIN to GND with a suitably large capacitor to eliminate noise on the input to the IC. |
| 3 | 3 | 3 | EN | Drive EN pin high or floating to turn on the regulator and low to turn off the regulator. |
| 4 | 6 | | SS | Soft-start control pin. Leave floating for internal soft-start slew rate. Connect to a capacitor to extend soft start time. |
| 5 | 4 | 4 | RT | Switching frequency program. Connect an external resistor from RT pin to ground to set the switching frequency. |
| 6 | 5 | 5 | FB | Output feedback pin. FB senses the output voltage and is regulated by the control loop to 800mV. Connect a resistive divider at FB. |
| 7 | | | COMP | Error amplifier output and input to the output switch current (PWM) comparator. Connect frequency compensation components to this pin. |
| 8 | 7 | 7 | GND | Ground. |
| 9 | 8 | 8 | SW | SW is the switching node that supplies power to the output. Connect the output LC filter from SW to the output load. |
| 10 | | 6 | PG | Open drain output for power-good flag. Use a 10kΩ to 100kΩ pull-up resistor to logic rail or other DC voltage no higher than 5V. |
| | | | Thermal Pad | GND pin must be electrically connected to the exposed pad on the printed circuit board for proper operation. |

For Internal Use Only
JoulWatt Confidential

## BLOCK DIAGRAM

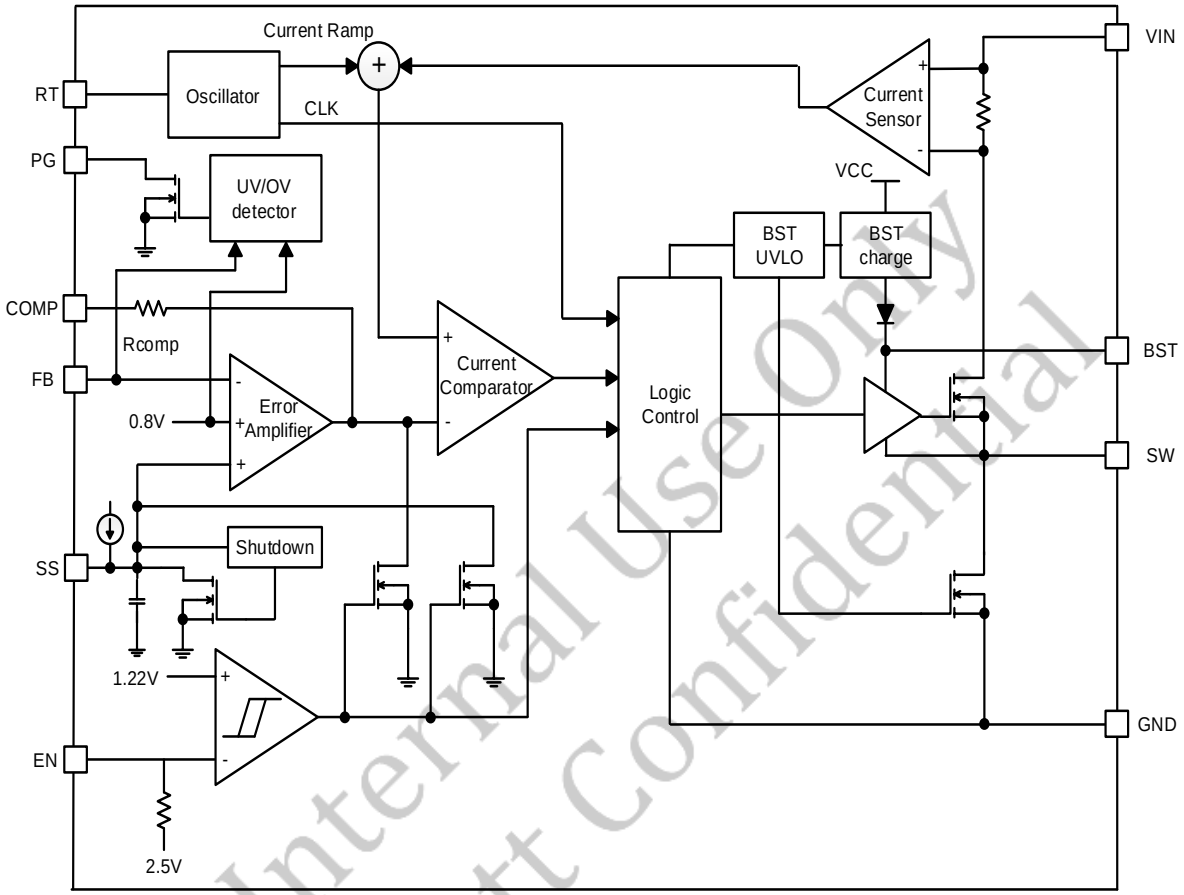


For Internal Use Only
JoulWatt Confidential


This document contains information of a product under development.
Joulwatt reserves the right to change this product without notice.

## FUNCTIONAL DESCRIPTION

The JWH5123 series are asynchronous, current-mode, step-down regulators. It regulates input voltages from 4.5V to 65V down to an output voltage as low as reference voltage, and is capable of supplying up to 3.5A of load current.

### Power Switch

N-Channel MOSFET switch is integrated on the JWH5123 series to down convert the input voltage to the regulated output voltage. Since the top MOSFET needs a gate voltage greater than the input voltage, a boost capacitor connected between BST and SW pins is required to drive the gate of the top switch. The boost capacitor is charged by the internal 4.3V rail when SW is low.

### Current-Mode Control

The JWH5123 series utilizes fixed frequency, peak current-mode control to regulate the output voltage. The output voltage is measured at the FB pin through a resistive voltage divider and the error is amplified by the internal transconductance error amplifier.

An internal oscillator initiates the turn on of the high side power switch, and the error amplifier output at the COMP pin controls the high side power switch current that when the high side MOSFET switch current reaches the threshold level set by the COMP voltage, the power switch is turned off.

The COMP voltage will increase and decrease as the output current increases and decreases. The device implements current limiting by clamping the COMP voltage to a maximum level. The PFM mode is implemented with a minimum voltage clamp on the COMP .

### PFM Mode

The JWH5123 series operate in PFM mode at light load to improve efficiency by reducing switching and gate drive losses.

During PFM mode operation, the JWH5123 series sense and controls peak switch current, not the average load current. Therefore the load current at which the device enters PFM mode is dependent on the output inductor value.

### Slope Compensation Output Current

The JWH5123 series add a compensating ramp to the COMP voltage to prevent sub-harmonic oscillations at duty cycles greater than 50%. The peak current limit of the high side switch will constant with duty cycle increases.

### Shut-Down Mode

The JWH5123 series shut down when voltage at EN pin is below 0.3V. The entire regulator is off and the supply current consumed by the JWH5123 series drop below 4uA.

### Enable and Adjustable UVLO Protection

The JWH5123 series is enabled when the VIN pin voltage rises above 4.4V and the EN pin voltage exceeds the enable threshold of 1.22V. The JWH5123 series are disabled when the VIN pin voltage falls below 4.2V or when the EN pin voltage is below 1.12V. The EN pin has an internal pull-up resistor that enables operation of the JWH5123 when the EN pin floats.

If an application requires a higher VIN under-voltage lockout (UVLO) threshold, use a resistive divider connected between VIN and ground with the central tap connected to EN to

For Internal Use Only
JoulWatt Confidential


This document contains information of a product under development.
Joulwatt reserves the right to change this product without notice.

adjust the input voltage UVLO. (Shown in Figure 1). So that when VIN rises to the pre-set value, EN rises above 1.22V to enable the device and when Vin drops below the pre-set value, EN drops below 1.12V to trigger input under voltage lockout protection.

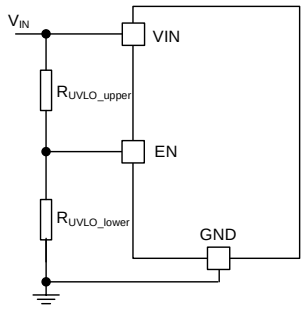


Fig. 1 Adjustable UVLO

The input voltage UVLO threshold ($V_{UVLO}$) and hysteresis ($V_{UVLO_HYS}$) can be calculated by the following equation.

$$V_{UVLO} := \frac{R_{UVLO_upper} + R_{UVLO_lower}}{R_{UVLO_lower}} \cdot V_{EN_TH}$$

$$V_{UVLO_HYS} := \frac{R_{UVLO_upper} + R_{UVLO_lower}}{R_{UVLO_lower}} \cdot V_{EN_HYS}$$

where

$V_{EN_TH}$ is enable shutdown threshold (1.22V typ.);

$V_{EN_HYS}$ is enable shutdown hysteresis (100mV typ.);

## External Soft-start

## (JWH5123/JWH5123S)

Soft-start is designed in JWH5123 and JWH5123S to prevent the converter output voltage from overshooting during startup and short-circuit recovery. An internal current source ($I_{SS}$) of 1.8uA is designed to charge the external soft-start capacitor ($C_{SS}$) and generates a soft-start (SS) voltage ramping up from 0V to 3V. When it is less than internal reference voltage ($V_{REF}$, typ. 0.8V), SS voltage overrides $V_{REF}$ and the error amplifier uses SS voltage as the reference. When SS exceeds $V_{REF}$, $V_{REF}$ regains control.

The soft start time $T_{SS}$ can be calculated by the following equation.

$$T_{SS}(\text{ms}) = \frac{C_{SS}(nF).V_{REF}(V)}{I_{SS}(uA)}$$

## Switching Frequency

The switching frequency of JWH5123 series can be programmed by the resistor $R_T$ from the RT pin and GND pin over a wide range from 100 kHz to 2000 kHz. The RT pin voltage is typically 1.2V and must have a resistor to ground to set the switching frequency. The $R_T$ resistance can be calculated by the following equation for a given switching frequency $f_{SW}$.

$$R_T(\text{K}\Omega) = \frac{92417}{f_{sw}(\text{KHz})} - 23 \quad \text{for JWH5123}$$

$$R_T(\text{K}\Omega) = \frac{57209}{f_{sw}(\text{KHz})} - 15\text{---JWH5123S/JWH5123P}$$

To reduce the solution size one would typically set the switching frequency as high as possible, but tradeoffs of the conversion efficiency, maximum input voltage and minimum controllable on time should be considered. The minimum controllable on time is typically 100 ns which limit the maximum operating frequency in applications with high input to output step down ratios.

## Power Good

## (JWH5123/JWH5123P)

The JWH5123 and JW5123P has power-good (PG) output. The PG pin is the open drain of a MOSFET. Connect to a voltage source (such as $V_{OUT}$) through a resistor. When the output voltage becomes within +6% and -7% of the target value, internal comparators detect power good state and the power good signal becomes

For Internal Use Only
JoulWatt Confidential



This document contains information of a product under development.
Joulwatt reserves the right to change this product without notice.

high. If the feedback voltage goes under -10% or higher +8% of the target value, the power good signal becomes low.

## Over Current / Output Short Protection

To protect the converter in overload conditions at higher switching frequencies and input voltages, the JWH5123 series implements a frequency fold-back. The oscillator frequency is divided by 4 as the FB voltage drops from reference voltage to below 0.35V. When the FB voltage rise above 0.4V, the frequency exist fold-back state. The oscillator frequency is divided by 8 as the FB voltage drops to 0.18V. When the FB voltage rise above 0.2V, the frequency exist fold-back state.

When the output voltage is forced low by the shorted load, the inductor current decreases slowly during the switch off time. The frequency fold-back effectively increases the off time by increasing the period of the switching cycle providing more time for the inductor current to ramp down.

The frequency fold-back effectively increases the off time by increasing the period of the switching cycle providing more time for the inductor current to ramp down. The maximum frequency fold-back ratio is 8.

If the power FET current rises above the current limit by 1.5A，the oscillator frequency is divided by $2^X$(X=0, 1, 2…7) in a minimum detection time.

Once the power FET is turned off by the current limit instead of minimum on time, the frequency exist fold-back state. With a maximum frequency fold-back ratio of 128, there is a maximum frequency at which the inductor current can be controlled by frequency fold-back protection.

## RT Short Protection

If the RT pin is detected to be short to ground, JWH5123 series are not allowed to switch to prevent abnormal operation state. The regulator can be reactivated again when the short condition at the RT pin is removed.

## Overvoltage Protection

Output overvoltage protection (OVP) is designed in JWH5123 series to minimize voltage overshoot when recovering from output fault conditions or strong unload transients in designs with low output capacitance and the power supply output voltage increase faster than the response of the error amplifier output resulting in an output overshoot.

The OVP feature minimizes output overshoot when using a low value output capacitor by comparing the FB pin voltage to the rising OVP threshold which is nominally 108% of the internal voltage reference. If the FB pin voltage is greater than the rising OVP threshold, the high side MOSFET is immediately disabled to minimize output overshoot. When the FB voltage drops below the falling OVP threshold which is nominally 106% of the internal voltage reference, the high side MOSFET resumes normal operation.

## Thermal Protection

When the temperature of the JWH5123 series rises above 170°C, it is forced into thermal shut-down.

Only when core temperature drops below 150°C can the regulator becomes active again.

For Internal Use Only
JoulWatt Confidential


JoulWatt® Proprietary Information. Patent Protected.
Unauthorized Photocopy and Duplication Prohibited.
This document contains information of a product under development.
Joulwatt reserves the right to change this product without notice.

## PACKAGE OUTLINE

DFN4x4-10 UNIT: mm

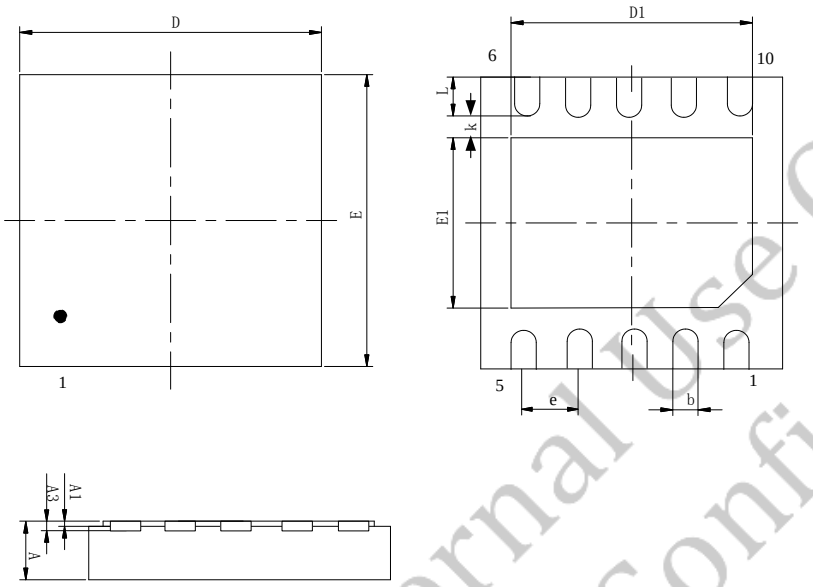


| SYMBOL | MILLIMETER | | |
|---|---|---|---|
| | MIN | NOM | MAX |
| A | 0.70 | 0.75 | 0.80 |
| A1 | 0.00 | 0.02 | 0.05 |
| A3 | | 0.203REF | |
| D | | 4.00BSC | |
| E | | 4.00BSC | |
| D1 | 2.90 | 3.00 | 3.10 |
| E1 | 2.50 | 2.60 | 2.70 |
| k | | 0.30REF | |
| b | 0.25 | 0.30 | 0.35 |
| e | | 0.80BCS | |
| L | 0.30 | 0.40 | 0.50 |

QUADRANT ASSIGNMENTS FOR PIN 1 ORIENTATION IN TAPAE

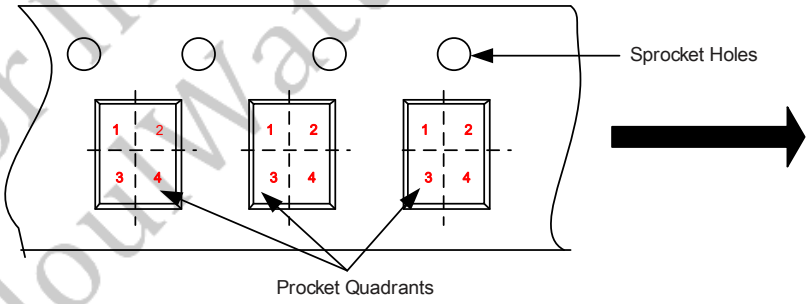


| Package Type | Pin1 Quadrant |
|---|---|
| DFN4x4-10 | 1 |

For Internal Use Only
JouWatt Confidential


This document contains information of a product under development.
Joulwatt reserves the right to change this product without notice.

ESOP8 UNIT: mm

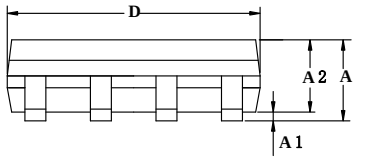


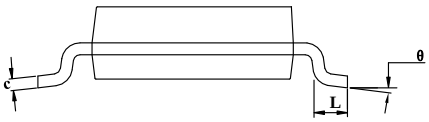


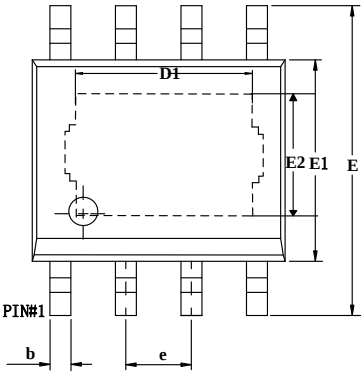


| Symbol | MILLIMETER | | |
|---|---|---|---|
| | MIN | NOM | MAX |
| A | 1.30 | — | 1.70 |
| A1 | 0.00 | — | 0.10 |
| A2 | 1.35 | — | 1.60 |
| b | 0.33 | — | 0.51 |
| c | 0.17 | — | 0.25 |
| D | 4.70 | — | 5.10 |
| E | 5.80 | 6.00 | 6.20 |
| E1 | 3.75 | 3.90 | 4.15 |
| D1 | 3.05 | — | 3.40 |
| E2 | 2.16 | — | 2.50 |
| e | 1.27BSC | | |
| L | 0.40 | — | 1.27 |
| θ | 0° | — | 8° |

QUADRANT ASSIGNMENTS FOR PIN 1 ORIENTATION IN TAPAE

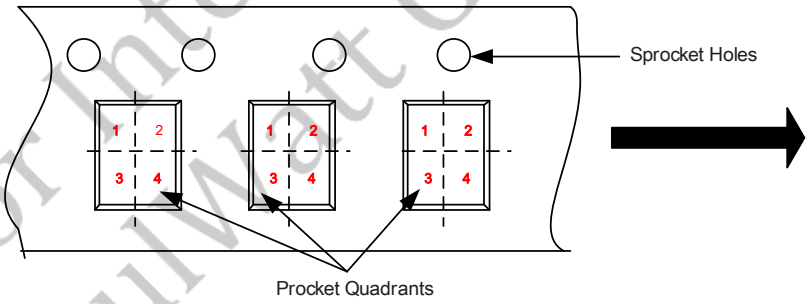


| Package Type | Pin1 Quadrant |
|---|---|
| ESOP8 | 1 |

For Internal Use Only
JoulWatt Confidential


JoulWatt® Proprietary Information. Patent Protected.
Unauthorized Photocopy and Duplication Prohibited.
This document contains information of a product under development.
Joulwatt reserves the right to change this product without notice.

## IMPORTANT NOTICE

- **Joulwatt Technology Inc. reserves the right to make modifications, enhancements, improvements, corrections or other changes without further notice to this document and any product described herein.**
- **Any unauthorized redistribution or copy of this document for any purpose is strictly forbidden.**
- **Joulwatt Technology Inc. does not warrant or accept any liability whatsoever in respect of any products purchased through unauthorized sales channel.**

For Internal Use Only
JoulWatt Confidential

*Copyright © 2020 JWH5123 Incorporated.*

*All rights are reserved by Joulwatt Technology Inc.*