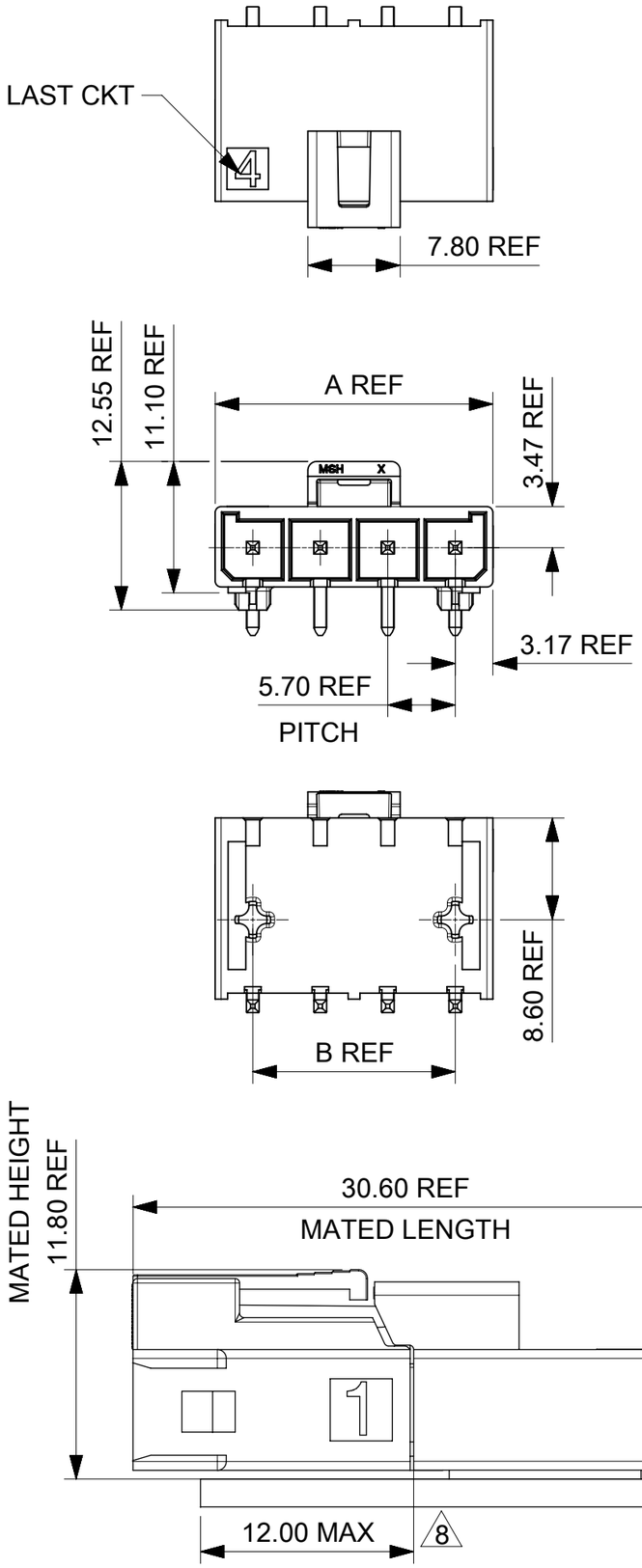

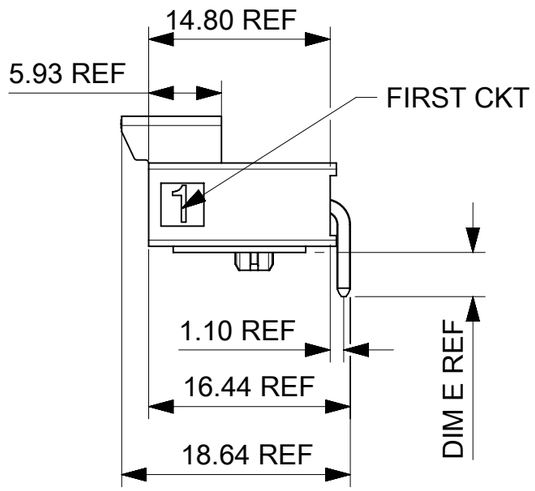

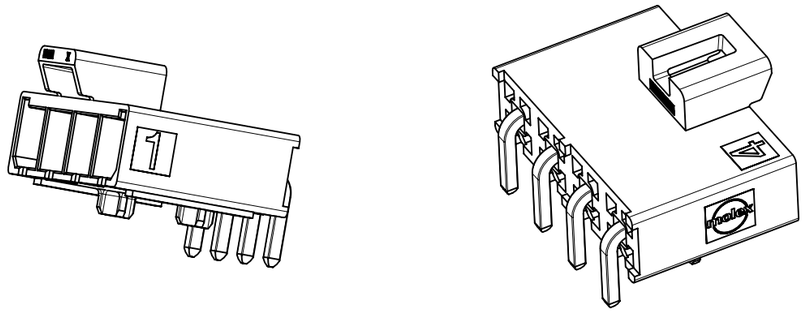

NOTES:
1. MATERIAL:
HOUSING LCP, UL94V-0, GLOW WIRE CAPABLE PER IEC-60335-1 5TH EDITION, COLOR: SEE CHART.
TERMINAL: HIGH CONDUCTIVITY COPPER.
2. TERMINAL PLATING:
(TIN) 1.52 MICROMETER MIN (60 MICROINCH MIN) REFLOWED MATTE TIN OVER 1.27 MICROMETER MIN (50 MICROINCH MIN) MIN NICKEL OVERALL.
(15 GOLD) 0.38 MICROMETER MIN (15 MICROINCH MIN) SELECTIVE GOLD ON CONTACT AREA WITH 2.54 MICROMETER MIN (100 MICROINCHES MIN) SELECTIVE TIN ON SOLDER AREA BOTH OVER 1.27 MICROMETER MIN (50 MICROINCHES MIN) NICKEL OVERALL.
(30 GOLD) 0.76 MICROMETER MIN (30 MICROINCH MIN) SELECTIVE GOLD ON CONTACT AREA WITH 2.54 MICROMETER MIN (100 MICROINCHES MIN) SELECTIVE TIN ON SOLDER AREA BOTH OVER 1.27 MICROMETER MIN (50 MICROINCHES MIN) NICKEL OVERALL.
3. PRODUCT SPECIFICATION: 1720631000-PS.
4. PACKAGING SPECIFICATION: SEE TABLE.
5. PART MATES WITH MOLEX PART NUMBER 200456 SERIES.
6. APPLICATION SPECIFICATION: 768232000-AS.
7. PARTS CONFORM TO CLASS "B" REQUIREMENTS OF COSMETIC SPECIFICATION PS-45499-002.
8. TO AVOID INTERFERENCE BETWEEN RECEPTACLE AND PCB, HEADER MUST BE PLACED WITHIN 12.00MM MAX FROM EDGE OF PCB.

THIS DRAWING CONTAINS INFORMATION THAT IS PROPRIETARY TO MOLEX ELECTRONIC TECHNOLOGIES, LLC AND SHOULD NOT BE USED WITHOUT WRITTEN PERMISSION

DIMENSION UNITS	SCALE	CURRENT REV DESC:					
mm	NTS						
GENERAL TOLERANCES (UNLESS SPECIFIED)							
ANGULAR TOL	± 3.0 °	EC NO: 850632					
4 PLACES	±	DRWN: JERRYW8	2026/03/09				
3 PLACES	±	CHK'D: XQZHANG	2026/03/25				
2 PLACES	± 0.4	APPR: XQZHANG	2026/03/25				
1 PLACE	± 0.5	INITIAL REVISION:					
0 PLACES	±	DRWN: YXZHENG	2016/09/22				
		APPR: YXZHENG	2018/08/06				
DRAFT WHERE APPLICABLE MUST REMAIN WITHIN DIMENSIONS		THIRD ANGLE PROJECTION	DRAWING	SERIES	MATERIAL NUMBER	CUSTOMER	SHEET NUMBER
			A3-SIZE	200241	SEE TABLE	GENERAL MARKET	1 OF 3

molex

MEGA-FIT S/R HEADER ASSEMBLY(R/A)

PRODUCT CUSTOMER DRAWING

DOCUMENT NUMBER	DOC TYPE	DOC PART	REVISION
2002412000	PSD	000	E2

DOCUMENT STATUS	P1	RELEASE DATE	2026/03/25 09:23:58

FORMAT: master-tb-mod-A3
REVISION: J1
DATE: 2021/05/01

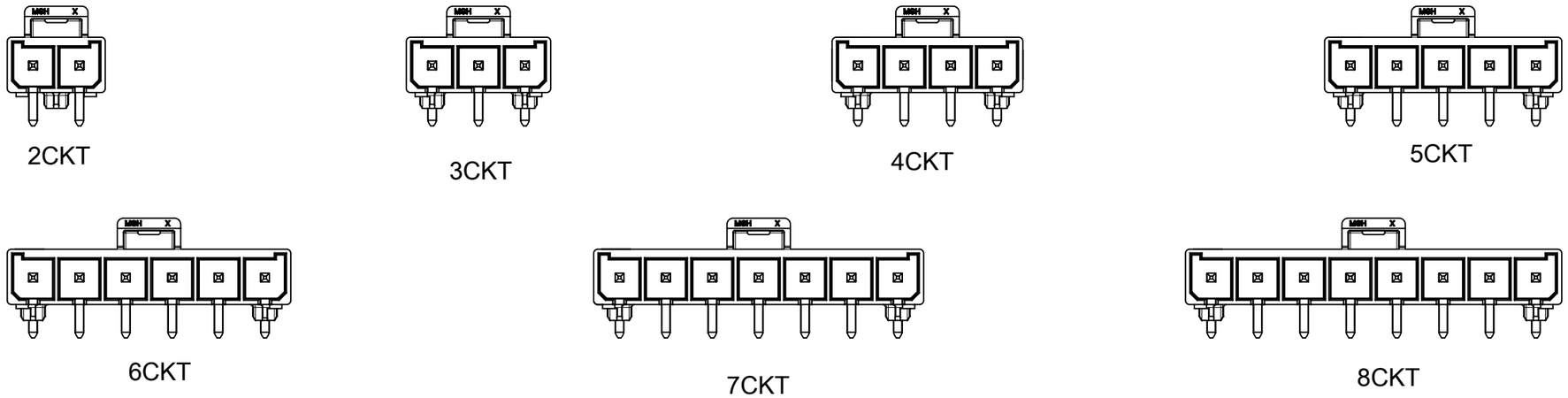

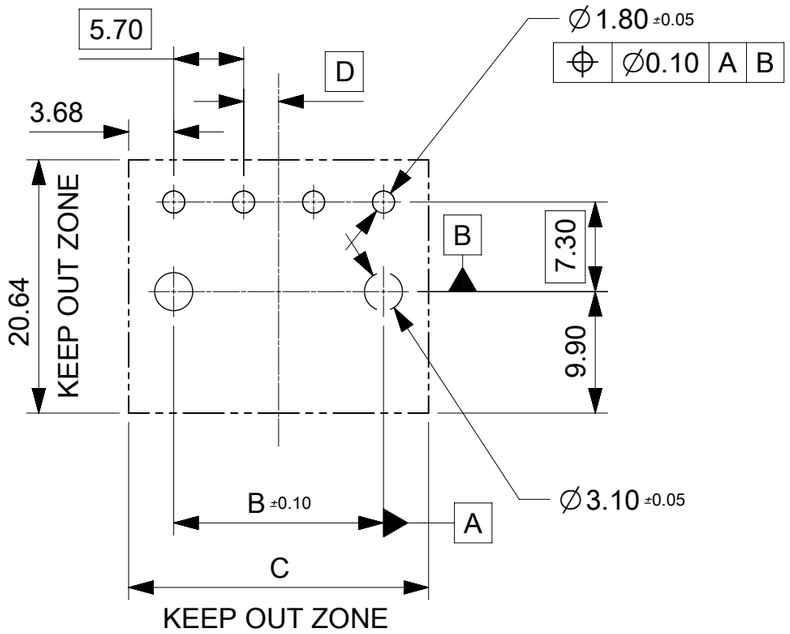

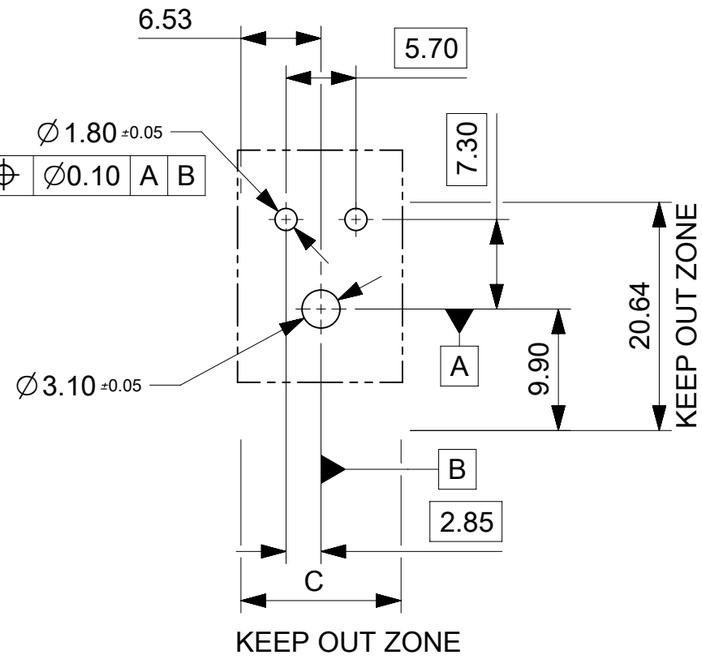

PCB LAYOUT:
1.COMPONENT SIDE
2.RECOMMEND PCB THICKNESS:1.58MM/.062IN TO 2.36MM/.093IN

THIS DRAWING CONTAINS INFORMATION THAT IS PROPRIETARY TO MOLEX ELECTRONIC TECHNOLOGIES, LLC AND SHOULD NOT BE USED WITHOUT WRITTEN PERMISSION

DIMENSION UNITS	SCALE	CURRENT REV DESC:	molex
mm	NTS		MEGA-FIT S/R HEADER ASSEMBLY(R/A)
GENERAL TOLERANCES (UNLESS SPECIFIED)			
ANGULAR TOL ± 3.0 °		EC NO: 850632	
4 PLACES ±		DRWN: JERRYW8 2026/03/09	
3 PLACES ±		CHK'D: XQZHANG 2026/03/25	PRODUCT CUSTOMER DRAWING
2 PLACES ± 0.4		APPR: XQZHANG 2026/03/25	
1 PLACE ± 0.5		INITIAL REVISION:	DOCUMENT NUMBER: 2002412000 · DOC TYPE: PSD · DOC PART: 000 · REVISION: E2
0 PLACES ±		DRWN: YXZHENG 2016/09/22	
		APPR: YXZHENG 2018/08/06	
DRAFT WHERE APPLICABLE MUST REMAIN WITHIN DIMENSIONS		THIRD ANGLE PROJECTION · DRAWING: A3-SIZE · SERIES: 200241	MATERIAL NUMBER: SEE TABLE · CUSTOMER: GENERAL MARKET · SHEET NUMBER: 2 OF 3

DOCUMENT STATUS	P1	RELEASE DATE	2026/03/25 09:23:58

FORMAT: master-tb-mod-A3
REVISION: J1
DATE: 2021/05/01

CKT SIZE	RESIN COLER	PART NO.	PLATING	DIM.A	DIM.B	DIM.C	DIM.D	DIM.E	PK DRAW NEMBER
2	BLACK	2002411212	TIN	12.05	N/A	13.05	2.85	3.60	2002412000 (TRAY PK SPEC)
3		2002411213		17.75	11.40	18.75	0.00		
4		2002414214		23.45	17.10	24.45	2.85		
5		2002411215		29.15	22.80	30.15	0.00		
6		2002411216		34.85	28.50	35.85	2.85		
7		2002411217		40.55	34.20	41.55	0.00		
8		2002411218		46.25	39.90	47.25	2.85		
2		2002411222	15" GOLD	12.05	N/A	13.05	2.85	3.60	
3		2002411223		17.75	11.40	18.75	0.00		
4		2002411224		23.45	17.10	24.45	2.85		
5		2002411225		29.15	22.80	30.15	0.00		
6		2002411226		34.85	28.50	35.85	2.85		
7		2002411227		40.55	34.20	41.55	0.00		
8		2002411228		46.25	39.90	47.25	2.85		
2		2002411232	30" GOLD	12.05	N/A	13.05	2.85	3.60	
2		2002411332		12.05	N/A	13.05	2.85	2.50	
3		2002411233		17.75	11.40	18.75	0.00	3.60	
4		2002411234		23.45	17.10	24.45	2.85		
5		2002411235		29.15	22.80	30.15	0.00		
6		2002411236		34.85	28.50	35.85	2.85		
7		2002411237		40.55	34.20	41.55	0.00		
8		2002411238		46.25	39.90	47.25	2.85		

CKT SIZE	RESIN COLER	PART NO.	PLATING	DIM.A	DIM.B	DIM.C	DIM.D	DIM.E	PK DRAW NUMBER
2	BLACK	2002411912	TIN	12.05	N/A	13.05	2.85	3.60	2002411900 (TAPE&REEL PK SPEC)
3		2002411913		17.75	11.40	18.75	0.00		
4		---		23.45	17.10	24.45	2.85		
5		2002411915		29.15	22.80	30.15	0.00		
6		2002411916		34.85	28.50	35.85	2.85		
7		2002411917		40.55	34.20	41.55	0.00		
8		2002411918		46.25	39.90	47.25	2.85		
2		2002411922	15" GOLD	12.05	N/A	13.05	2.85		
3		2002411923		17.75	11.40	18.75	0.00		
4		2002411924		23.45	17.10	24.45	2.85		
5		2002411925		29.15	22.80	30.15	0.00		
6		2002411926		34.85	28.50	35.85	2.85		
7		2002411927		40.55	34.20	41.55	0.00		
8		2002411928		46.25	39.90	47.25	2.85		
2		2002411932	30" GOLD	12.05	N/A	13.05	2.85		
3		2002411933		17.75	11.40	18.75	0.00		
4		2002411934		23.45	17.10	24.45	2.85		
5		2002411935		29.15	22.80	30.15	0.00		
6		2002411936		34.85	28.50	35.85	2.85		
7		2002411937		40.55	34.20	41.55	0.00		
8		2002411938		46.25	39.90	47.25	2.85		

THIS DRAWING CONTAINS INFORMATION THAT IS PROPRIETARY TO MOLEX ELECTRONIC TECHNOLOGIES, LLC AND SHOULD NOT BE USED WITHOUT WRITTEN PERMISSION

DIMENSION UNITS	SCALE
mm	NTS

GENERAL TOLERANCES (UNLESS SPECIFIED)

ANGULAR TOL	± 3.0 °
4 PLACES	±
3 PLACES	±
2 PLACES	± 0.4
1 PLACE	± 0.5
0 PLACES	±

DRAFT WHERE APPLICABLE MUST REMAIN WITHIN DIMENSIONS

CURRENT REV DESC:

EC NO: 850632
DRWN: JERRYW8 2026/03/09
CHK'D: XQZHANG 2026/03/25
APPR: XQZHANG 2026/03/25

INITIAL REVISION:
DRWN: YXZHENG 2016/09/22
APPR: YXZHENG 2018/08/06

molex

MEGA-FIT S/R HEADER ASSEMBLY(R/A)

PRODUCT CUSTOMER DRAWING

DOCUMENT NUMBER	DOC TYPE	DOC PART	REVISION
2002412000	PSD	000	E2

THIRD ANGLE PROJECTION	DRAWING	SERIES	MATERIAL NUMBER	CUSTOMER	SHEET NUMBER
	A3-SIZE	200241	SEE TABLE	GENERAL MARKET	3 OF 3

DOCUMENT STATUS	P1	RELEASE DATE	2026/03/25 09:23:58

FORMAT: master_B_size-A3
REVISION: J1
DATE: 2021/05/05