BILL OF MATERIAL

ITEM	PART DESCRIPTION	MATERIAL	COLOR			
1	48CKT_RA_S_CMC_HOUSING_BLK_PCB_2MM	PBT GF 30	BLACK	1	-	-
1	48CKT_RA_S_CMC_HOUSING_GRY_PCB_2MM	PBT GF 30	GREY	-	1	-
1	48CKT_RA_S_CMC_HOUSING_BRN_PCB_2MM	PBT GF 30	BROWN	-	-	1
2	CMC STRAIGHT GUIDING PLATE 48CKT	PBT GF 30-V0	BLACK	1	1	1
3	48CKT RA S CMC GASKET	SILICONE	RED	1	1	1
4	CMC HEADER PIN 1.5 W/PLT ROW4	C26000 3/4H	N/A	2	2	2
5	CMC HEADER PIN 1.5 W/PLT ROW3	C26000 3/4H	N/A	2	2	2
6	CMC HEADER PIN 1.5 W/PLT ROW2	C26000 3/4H	N/A	2	2	2
7	CMC HEADER PIN 1.5 W/PLT ROW1	C26000 3/4H	N/A	2	2	2
8	CMC HEADER PIN 0.64 W/BANDOLIER ROW4	C26000 3/4H	N/A	10	10	10
9	CMC HEADER PIN 0.64 W/BANDOLIER ROW3	C26000 3/4H	N/A	10	10	10
10	CMC HEADER PIN 0.64 W/BANDOLIER ROW2	C26000 3/4H	N/A	10	10	10
11	CMC HEADER PIN 0.64 W/BANDOLIER ROW1	C26000 3/4H	N/A	10	10	10
12	GREY DOT PAINT		N/A	-	1	-
12	BROWN DOT PAINT		N/A	-	-	1
	BANDOLIER		N/A			

MOLEX ASSEMBLY PART NO	PART DESCRIPTION	48 WAY POCKET	48 WAY POCKET	48 WAY POCKET
5007621001	48CKT_RA_S_CMC_HEADER_ASSY_BLK_PCB_2MM	BLACK KEY		
5007621002 (NOT TOOLED)	48CKT_RA_S_CMC_HEADER_ASSY_GRY_PCB_2MM		GREY KEY	
5007621003	48CKT_RA_S_CMC_HEADER_ASSY_BRN_PCB_2MM			BROWN KEY

NOTES: VALID UNLESS OTHERWISE SPECIFIED

1. GENERAL:
   - 1.1 APPLICATION SPECIFICATION SEE: 5007620000-AS PS 000
   - 1.2 PRODUCT SPECIFICATION SEE: 5007620000-PS PS 000
   - 1.3 PACKAGING SPECIFICATION PER MOLEX DRAWING 5007621001-PK PDD 000
   - 1.4 PARTS MUST BE IN COMPLIANCE TO MOLEX CHEMICAL SUBSTANCES FOR PRODUCTS AND PACKAGING SPECIFICATION: 201404-0015 (INTERNAL)
   - 1.5 DATA MUST BE SUBMITTED UNDER THE MOLEX PART NUMBER TO IMDS (COMPANY ID#13255)

2. DESIGN - MATERIALS:
   - 2.1 SEE BOM TABLE

3. DESIGN - GEOMETRY:
   - 3.1 THE 3-D CAD DATA IS BASIC (WITHOUT TOLERANCE) AND MUST BE TAKEN FROM THE DATA FILE AT ITS LATEST REVISION.
   - 3.2 THE 3-D CAD DATA IS MASTER FOR THIS PART AND IS TO BE USED TO ESTABLISH DIMENSIONAL INFORMATION NOT SHOWN ON THIS DRAWING. ANY DIMENSIONS UNDERLINED INDICATE A CONFLICT WITH THE MODEL.
   - 3.3 PRODUCT DESIGN MODEL NUMBER(S): SEE BOM TABLE
   - 3.4 GEOMETRIC DIMENSIONS AND TOLERANCES PER ASME Y14.5-2009
   - 3.5 EDGES OF UNDEFINED SHAPE PER ISO 13715
   - 3.6 DIMENSIONS AND TOLERANCES APPLY BEFORE AND AFTER PLATING

4. DESIGN - MANUFACTURING:
   - 4.1 ANY PROCESS LUBRICANT REMAINING ON THE TERMINAL MUST NOT VARNISH OR DEGRADE ITS ELECTRICAL PERFORMANCE AS DEFINED IN THE PRODUCT SPEC. PROCESS LUBRICANTS SHALL BE APPROVED BY THE RESPONSIBLE ENGINEER.
   - 4.2 ALLOWABLE BURR ON TERMINALS: 0.05 MAX. NO BURRS ALLOWED AT MATING AREA AS AT PCB SOLDERING AREA.
   - 4.3 ALLOWED CAMBER: 6.35mm PER 457mm
   - 4.4 ALLOWED TWIST: 45° PER 1 METER
   - 4.5 MAXIMUM 3 SPLICES PER REEL
   - 4.6 PART TO BE FREE OF TOOL MARKS AS NOTED
   - 4.7 VISUAL DEFECTS SHALL MEET COSMETIC STANDARD PS-45499-002 (Class B)

5. INTERFACE DEFINITION:
   - 5.1 REFER TO DRAWING SD-98644-006.

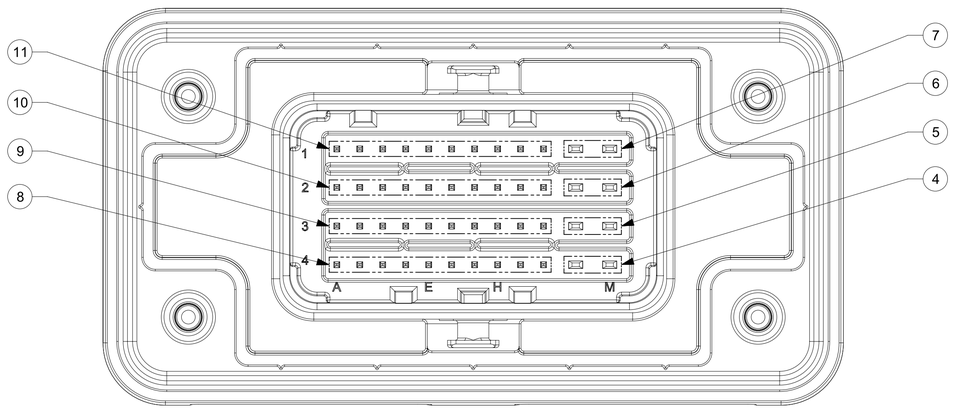

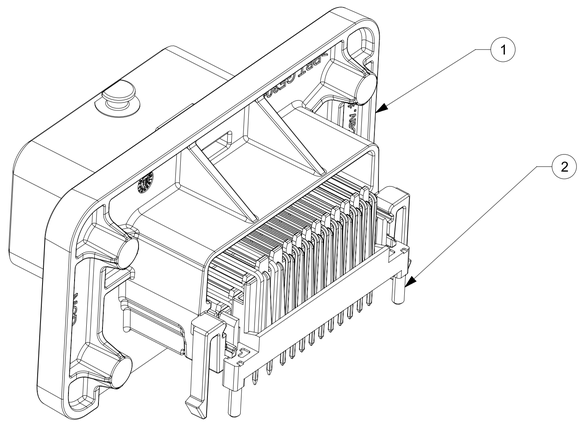

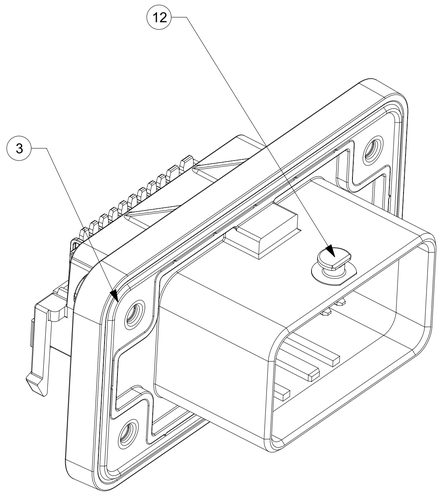

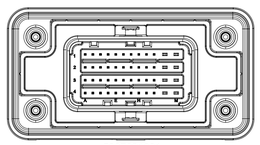

5007621001
Black

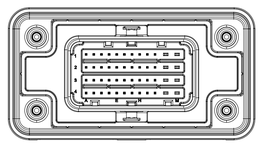

5007621003
Brown

THIS DRAWING CONTAINS INFORMATION THAT IS PROPRIETARY TO MOLEX ELECTRONIC TECHNOLOGIES, LLC AND SHOULD NOT BE USED WITHOUT WRITTEN PERMISSION

DIMENSION UNITS	SCALE
MM	3:1

GENERAL TOLERANCES (UNLESS SPECIFIED)

ANGULAR TOL	±	0.5 °
4 PLACES	±	0.03
3 PLACES	±	0.03
2 PLACES	±	0.05
1 PLACE	±	0.1
0 PLACES	±	0.15

DRAFT WHERE APPLICABLE MUST REMAIN WITHIN DIMENSIONS

CURRENT REV DESC: To delete the extra page 4

EC NO: CO-000038265
DRWN: Fan Bai 31-Mar-2026
CHK'D: Yu Dong Zhang 31-Mar-2026
APPR: Elvis Song 01-Apr-2026

INITIAL REVISION:
DRWN: OVERCHERE 06-Mar-2018
APPR: SLAFAURE 06-Jul-2018

FIRST ANGLE PROJECTION

molex

48CKT RA S CMC HEADER
48CKT RA S CMC HEADER

PRODUCT CUSTOMER DRAWING

DOCUMENT NUMBER	DOC TYPE	DOC PART	REVISION
5007621000	PSD	000	A12

DRAWING	SERIES	MATERIAL NUMBER	CUSTOMER	SHEET NUMBER
A1-SIZE	500762	SEE BOM TABLE	GENERAL MARKET	1 OF 3

DOCUMENT STATUS	Production	RELEASE DATE	01-Apr-2026 12:59:44

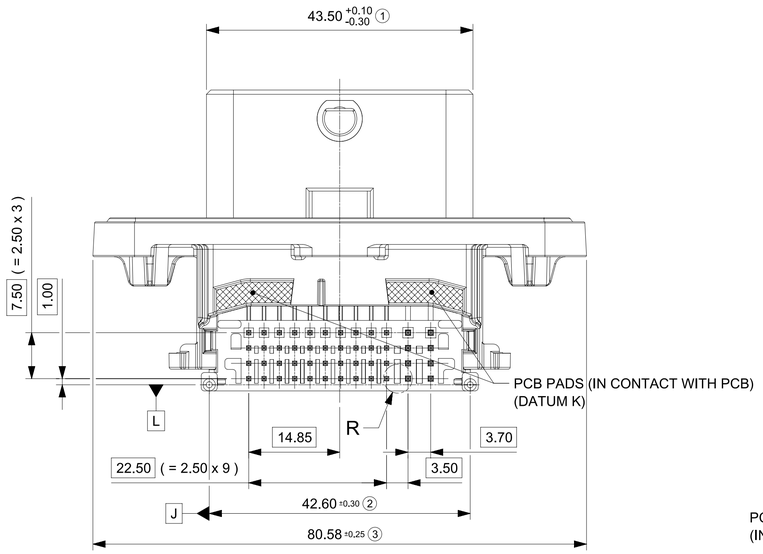

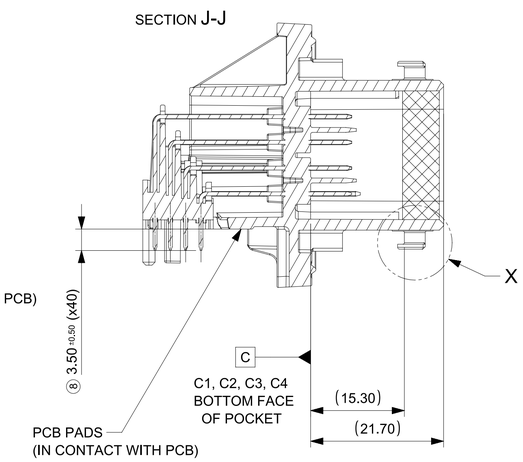

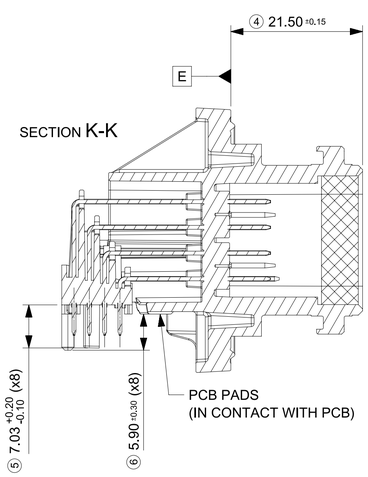

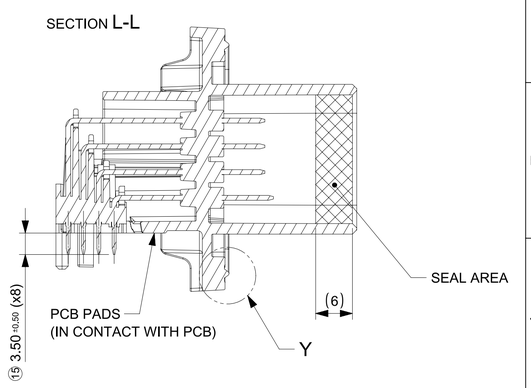

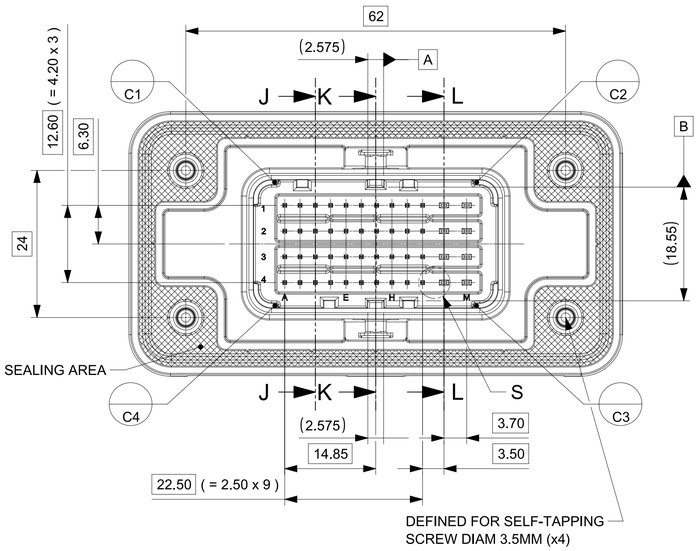

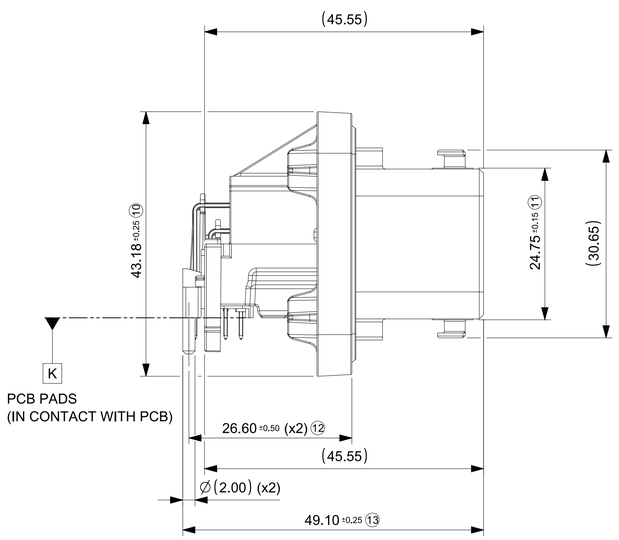

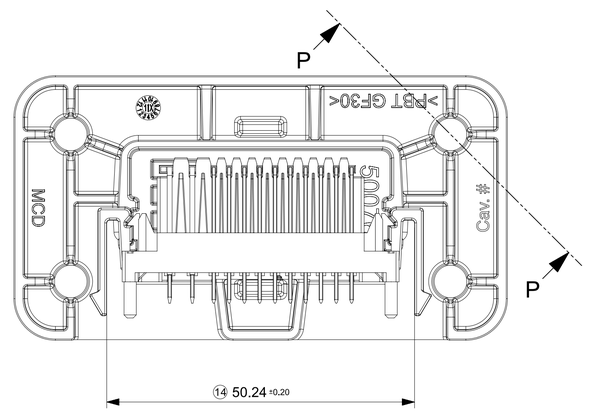

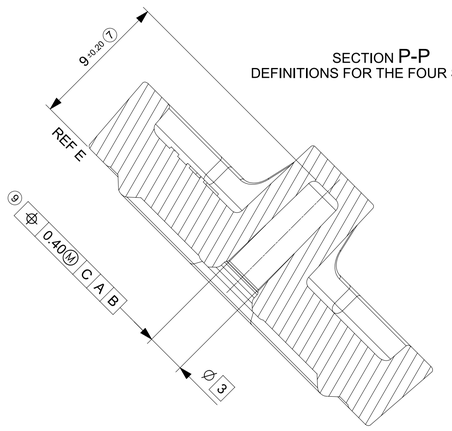

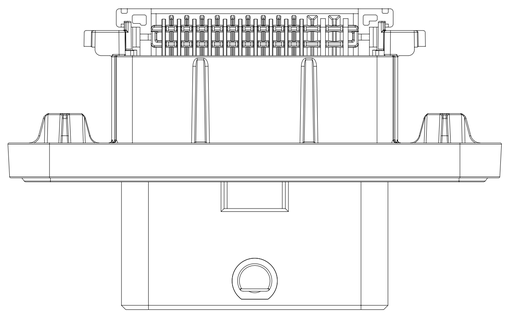

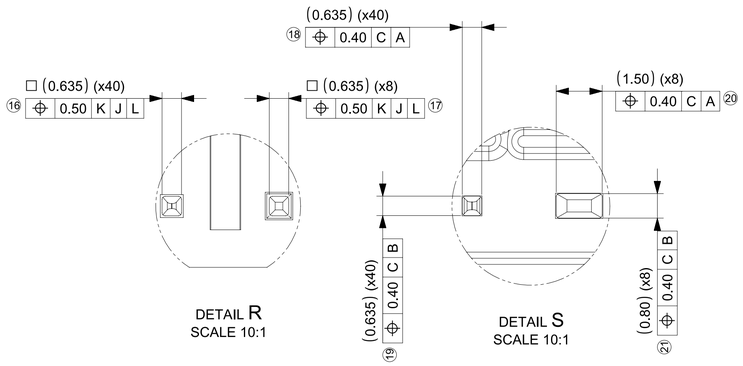

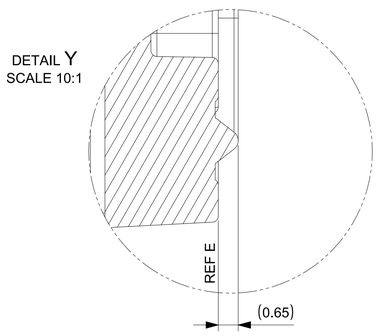

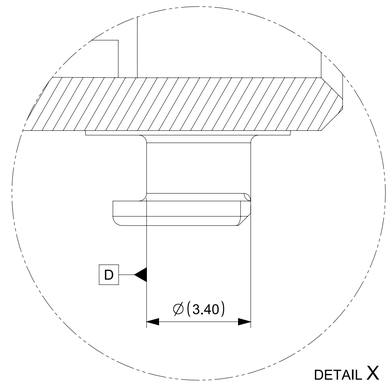

A4	1	21	N/A	N/A	16,17,18,19,20,21
A2	1	15	N/A	N/A	15
A	1	14	N/A	N/A	N/A
REV	FIRST	LAST	MISSING	REMOVED	ADDED
INSPECTION NUMBERS					

SPECIAL CHARACTERISTICS RELATED TO THE RECEPTACLE INTERFACE			
RECEPTACLE INTERFACE DRAWING	BALLOON	DIMENSION	FUNCTION
48CKT SD-98644-006	11	21 +/-0.1	SEALING
	41	40 +/-0.1	
	45	4x R3 +/-0.1	
	57	6.7 +/-0.2	PIN HEIGHT
	72	6.7 +/-0.2	
	86	8.1 +/-0.2	

THIS DRAWING CONTAINS INFORMATION THAT IS PROPRIETARY TO MOLEX ELECTRONIC TECHNOLOGIES, LLC AND SHOULD NOT BE USED WITHOUT WRITTEN PERMISSION

DIMENSION UNITS	SCALE
MM	2:1

GENERAL TOLERANCES (UNLESS SPECIFIED)

ANGULAR TOL	±	0.5 °
4 PLACES	±	0.03
3 PLACES	±	0.03
2 PLACES	±	0.05
1 PLACE	±	0.1
0 PLACES	±	0.15

DRAFT WHERE APPLICABLE MUST REMAIN WITHIN DIMENSIONS

CURRENT REV DESC: To delete the extra page 4

EC NO: CO-000038265
DRWN: Fan Bai 31-Mar-2026
CHK'D: Yu Dong Zhang 31-Mar-2026
APPR: Elvis Song 01-Apr-2026

INITIAL REVISION:
DRWN: OVERCHERE 06-Mar-2018
APPR: SLAFAURE 06-Jul-2018

molex

48CKT RA S CMC HEADER
48CKT RA S CMC HEADER

PRODUCT CUSTOMER DRAWING

DOCUMENT NUMBER	DOC TYPE	DOC PART	REVISION
5007621000	PSD	000	A12

FIRST ANGLE PROJECTION	DRAWING	SERIES	MATERIAL NUMBER	CUSTOMER	SHEET NUMBER
	A1-SIZE	500762	SEE BOM TABLE	GENERAL MARKET	2 OF 3

DOCUMENT STATUS	Production	RELEASE DATE	01-Apr-2026 12:59:44

RECOMMENDED PCB PAYOUT (COMPONENT SIDE)
THICKNESS: 2.0±0.1

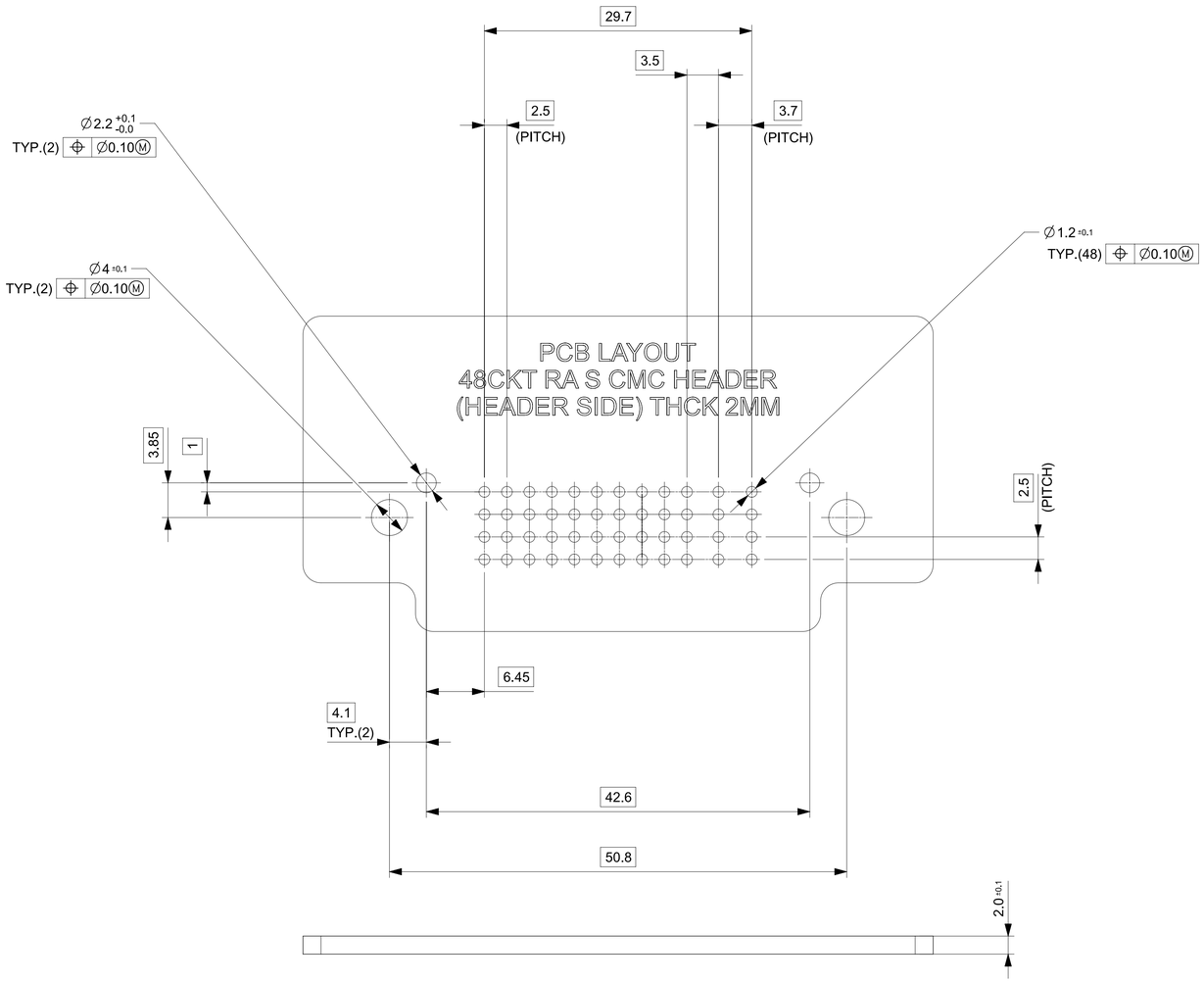

NOTES:
1. THE VIEW 'RECOMMENDED PCB LAYOUT' SHOW STHESECTION OF THE HOLE POSITION CONCERNING THE HEADER-PIN, GUIDING AND LOCKING LAYOUT.

2. THIS VIEW OF THE HOLE PATTERN DOESN'T POINT TO THE ABSOLUTE POSITION ON THE PCB.

3. THE HOLE PATERN IS THE COPY OF THE HEADER LAYOUT.

4. PLEASE COMBINE THE TWO ELEMENTS
(HEADER AND VIEW OF THE HOLE PATTERN)

RECOMMENDED PANEL PAYOUT

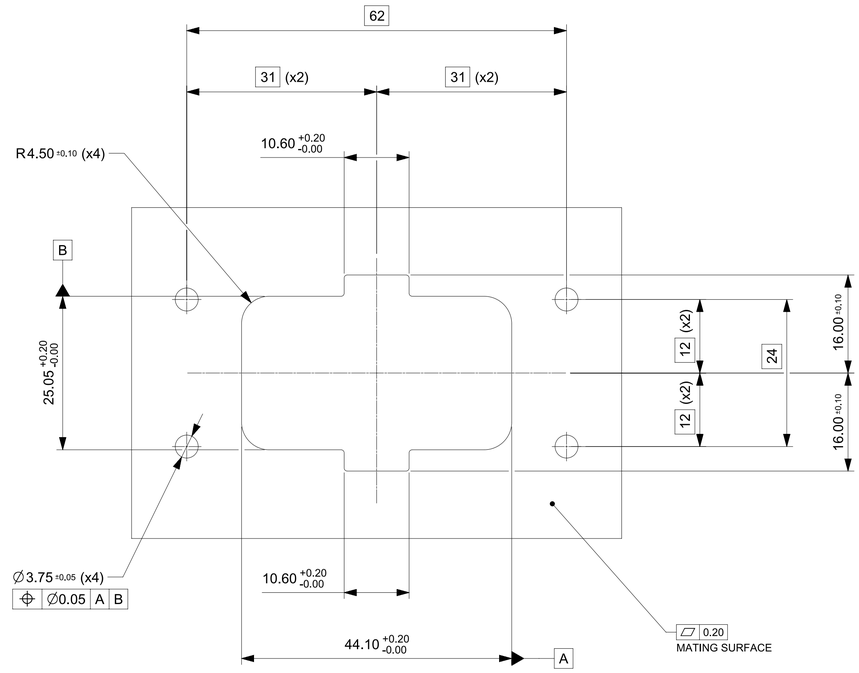

NOTES:
1. REQUIRED MATING SURFACE FINISH: Ra 3.0µm MAX OR POLISHED.

2. RECOMMENDED SCREW SIZE: SELF-TAPPING SCREW DIAM 3.5 WITH ENGAGEMENT LENGTH 6MM MINI.

3. RECOMMENDED PANEL THICKNESS: 2MM TO 4MM.

4. RECOMMENDED PANEL MATERIAL: METAL.

THIS DRAWING CONTAINS INFORMATION THAT IS PROPRIETARY TO MOLEX ELECTRONIC TECHNOLOGIES, LLC AND SHOULD NOT BE USED WITHOUT WRITTEN PERMISSION

DIMENSION UNITS	SCALE
MM	5:1

GENERAL TOLERANCES (UNLESS SPECIFIED)

ANGULAR TOL	±	0.5 °
4 PLACES	±	0.03
3 PLACES	±	0.03
2 PLACES	±	0.05
1 PLACE	±	0.1
0 PLACES	±	0.15

DRAFT WHERE APPLICABLE MUST REMAIN WITHIN DIMENSIONS

CURRENT REV DESC: To delete the extra page 4

EC NO: CO-000038265
DRWN: Fan Bai 31-Mar-2026
CHK'D: Yu Dong Zhang 31-Mar-2026
APPR: Elvis Song 01-Apr-2026

INITIAL REVISION:
DRWN: OVERCHERE 06-Mar-2018
APPR: SLAFAURE 06-Jul-2018

FIRST ANGLE PROJECTION | DRAWING: A1-SIZE | SERIES: 500762

molex

48CKT RA S CMC HEADER
48CKT RA S CMC HEADER

PRODUCT CUSTOMER DRAWING

DOCUMENT NUMBER	DOC TYPE	DOC PART	REVISION
5007621000	PSD	000	A12

MATERIAL NUMBER	CUSTOMER	SHEET NUMBER
SEE BOM TABLE	GENERAL MARKET	3 OF 3

DOCUMENT STATUS	Production	RELEASE DATE	01-Apr-2026 12:59:44